CLARK ELEMENTARY SCHOOL
ISSAQUAH SCHOOL DISTRICT #411
400 1st AVE. SE
ISSAQUAH, WASHINGTON 98027

GENERAL NOTES

GENERAL REQUIREMENTS

A. DRAWINGS. THE DRAWINGS ARE INTENDED TO DESCRIBE THE OVERALL SCOPE OF WORK. CONTRACTORS SHALL FIELD VERIFY EXISTING CONDITIONS AND ALERT ARCHITECT TO ANY UNFORESEEN CONSTRUCTION DIFFICULTIES BEFORE BEGINNING WORK.

B. PRE–CONSTRUCTION MEETING. PRIOR TO ANY CONSTRUCTION OR DEVELOPMENT ACTIVITY, THE CONTRACTOR SHALL SCHEDULE, WITH OWNER APPROVAL, A PRE–CONSTRUCTION MEETING WITH THE LOCAL BUILDING DEPT. OR LOCAL PUBLIC WORKS DEPT. VERIFY WHICH AGENCIES SHOULD BE INVOLVED. THE CONTRACTOR SHALL PROVIDE LOCAL INSPECTOR WITH 24 HOURS NOTICE PRIOR TO INSPECTION.

C. REPETITIVE. TYPICAL WALL SECTIONS, FINISHES, AND DETAILS ARE NOT INDICATED EVERYWHERE THEY OCCUR ON PLANS, ELEVATIONS AND SECTIONS. REFER TO DETAILED DRAWINGS. CONTRACTOR TO PROVIDE AS IF DRAWN IN FULL.

D. CODES / PERMITS / REGULATIONS. CONTRACTOR SHALL OBTAIN AND PAY FOR ALL PERMITS NECESSARY OTHER THAN THE BUILDING CONSTRUCTION PERMIT. CONTRACTOR SHALL ALSO PAY FOR ALL OTHER CHARGES, FEES OR COSTS CHARGED BY THE BUILDING AND CONSTRUCTION DEPARTMENTS, UTILITY AGENCIES OR PRIVATE COMPANIES WHICH REQUIRE SUCH COSTS FOR OR PRIOR TO INSTALLATIONS.

NOTHING IN THE DRAWINGS SHALL BE CONSTRUED TO PERMIT AN INSTALLATION IN VIOLATION OF APPLICABLE CODES AND/OR RESTRICTIONS. SHOULD ANY CHANGE IN THE DRAWINGS BE NECESSARY IN ORDER TO COMPLY WITH APPLICABLE CODES AND/OR REQUIREMENTS, THE CONTRACTOR SHALL NOTIFY THE ARCHITECT AT ONCE AND CEASE WORK. ALL PARTS PERFORMED UNDER THIS CONTRACT SHALL BE IN FULL ACCORDANCE WITH THE LATEST RULES, REGULATIONS, RESTRICTIONS, REQUIREMENTS AND CODES.

ALL WORK SHALL CONFORM TO THE CURRENT EDITION OF THE INTERNATIONAL BUILDING CODE AS AMENDED BY THE STATE OF WASHINGTON AND ALL LOCAL JURISDICTION RULES AND REGULATIONS.

E. DIMENSIONS ARE SHOWN TO FACE OF MASONRY OR CENTERLINE OF OPENING, UNLESS DETAILED OTHERWISE ON DRAWINGS.

DO NOT SCALE DRAWINGS. THE CONTRACTOR SHALL USE DIMENSIONS SHOWN ON THE DRAWINGS AND ACTUAL FIELD MEASUREMENTS. NOTIFY THE ARCHITECT IF ANY DISCREPANCIES ARE FOUND.

THE CONTRACTOR SHALL VERIFY ALL ROUGH–IN DIMENSIONS FOR THE EQUIPMENT FURNISHED AND INSTALLED BY CONTRACTOR, FURNISHED BY OWNER AND INSTALLED BY CONTRACTOR OR OTHERS.

THE CONTRACTOR SHALL CONSULT THE PLANS OF ALL TRADES FOR OPENINGS THROUGH SLABS, WALLS, CEILINGS AND ROOFS FOR DUCTS, PIPES, CONDUIT, CABINETS AND EQUIPMENT, AND SHALL VERIFY THE SIZES AND LOCATIONS WITH SUBCONTRACTORS.

F. SHOP DRAWINGS. PROVIDE SHOP DRAWINGS FOR THE ARCHITECT'S/ OWNER'S APPROVAL AND AS REQUIRED BY LOCAL JURISDICTION PRIOR TO CONSTRUCTION.

G. SPECIAL INSPECTIONS. OWNER WILL HIRE A TESTING LAB FOR SPECIAL INSPECTIONS AS REQUIRED BY LOCAL JURISDICTION.

IMPERVIOUS AREAS

Clark Elementary

401 1st Ave. SE
Issaquah, WA

4-15-16

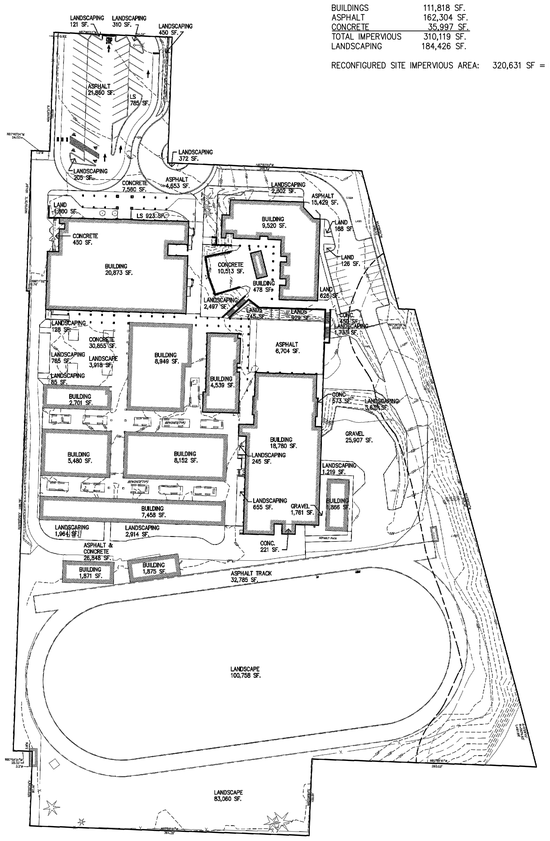

Existing Site Plan Showing Impervious Area
Scale: 1" = 80'-0"

Cornerstone ARCHITECTURAL GROUP

EXISTING SITE IMPERVIOUS:

BUILDINGS	92,542 SF.
ASPHALT	108,279 SF.
GRAVEL	27,668 SF.
CONCRETE	50,622 SF.
TOTAL IMPERVIOUS	279,111 SF.
LANDSCAPING	215,434 SF.
TOTAL SITE	494,545 SF.

EXISTING SITE IMPERVIOUS AREA: 279,111 SF = 56% IMPERVIOUS

RECONFIGURED SITE IMPERVIOUS:

BUILDINGS	111,818 SF.
ASPHALT	162,304 SF.
CONCRETE	35,997 SF.
TOTAL IMPERVIOUS	310,119 SF.
LANDSCAPING	184,426 SF.

RECONFIGURED SITE IMPERVIOUS AREA: 320,631 SF = 65% IMPERVIOUS

CODE INFORMATION

CODES USED:

2012 INTERNATIONAL BUILDING CODE WAC 51–50
2012 INTERNATIONAL MECHANICAL CODE WAC 51–52
2012 INTERNATIONAL FIRE CODE WAC 51–54
2012 UNIFORM PLUMBING CODE WAC 51–56, 51–57
2012 WASHINGTON STATE ENERGY CODE WAC 51–11

NAME OF PROJECT: CLARK ELEMENTARY SCHOOL
ISSAQUAH SCHOOL DISTRICT NO. 411
400 1st AVE. SE
ISSAQUAH, WASHINGTON 98027

SCOPE OF WORK: REMODEL, ADDITIONS AND RE–PURPOSING OF EXISTING ISSAQUAH MIDDLE SCHOOL BUILDINGS. EXISTING 100 AND 400 BUILDINGS WLL BE REMODELED AND RECONFIGURED, 3 EXISTING BUILDINGS WILL BE REMOVED.

SITE AREA: 494,545 SF; 11 ACRES

LOT COVERAGE: 92,542/494,545 = 18% LOT COVERAGE

ZONING: CF–F COMMUNITY FACILITIES
ADJACENT ZONING: MF–H, SF–SL & SF–D

TAX ACCOUNT NO: 2354300270–290–285–315
3424069028–104–140

WATER AND SEWER: CITY OF ISSAQUAH

FIRE FLOW RATES: 1700 GPM
ADDITIONAL PERMITS REQUIRED: CLEARING AND GRADING, DEMOLITION, BUILDING, FOUNDATION, UTILITY, HEALTH DEPARTMENT, NPDES

BUILDING AREA SUMMARY:

REMODEL BUILDING 100:	20,873 SF
REMODEL BUILDING 400:	3,590 SF
FIRST FLOOR ADDITION:	27,410 SF
SECOND FLOOR ADDITION:	12,271 SF
THIRD FLOOR ADDITION:	12,271 SF
TOTAL BUILDING AREA:	76,415 SF
FIRST FLOOR EXPANSION:	937 SF
SECOND FLOOR EXPANSION:	937 SF
THIRD FLOOR EXPANSION:	937 SF
TOTAL EXPANSION ALT:	2,811 SF
TOTAL BUILDING AREA:	79,226 SF
COVERED PLAY BUILDINGS:	2,600 X 2 = 5,200 SF
REMODEL 400 BLDG TOILETS:	444 SF

PARKING:

REQUIRED PARKING:
CLARK ELEMENTARY 3 STALL/CLASSROOM (31) = 93 SPACES
GIPSON EK HS 4 STALL/CLASSROOM (10) = 40 SPACES
GIPSON EK HS 1 STALL/EMPLOYEE (20) = 20 SPACES
OFFICE PORTABLES 1 STALL/300 SF =
(5) 1,850 OFFICE PORTABLES 1 STALL/300 SF= 31 SPACES
PORTABLE CLASSROOMS 3 STALL/CLASSROOM = 42 SPACES

TOTAL STALLS REQUIRED = 226 SPACES

PROPOSED PARKING

STANDARD:	220
ACCESSIBLE:	3
VAN ACCESSIBLE:	4
LOADING:	4
TOTAL STALLS PROVIDED:	231 SPACES

OVERFLOW PARKING ON
SURFACED PLAY AREA: 81 SPACES
EVENT PARKING: 312 SPACES

PROJECT TEAM

OWNER
ISSAQUAH SCHOOL DISTRICT No. 411
CAPITAL PROJECTS
565 NW HOLLY STREET
ISSAQUAH, WA 98027–2889
(425) 837–7040
STEVE CRAWFORD, DIRECTOR OF CAPITAL PROJECTS
ROYCE NOURIGAT, CONSTRUCTION COORDINATOR

ARCHITECT
CORNERSTONE ARCHITECTURAL GROUP
6161 175TH STREET, SUITE 101
KENMORE, WA 98028
(206) 682–5000
STEVE BARNES

STRUCTURAL
PETERSON, STREHLE, MARTINSON, INC.
2200 SIXTH AVE., SUITE 601
SEATTLE, WA 98121
(206) 622–4580
DAVID STUBBS

MECHANICAL
HULTZ BHU ENGINEERS, INC.
111 FAWCETT AVE., SUITE 100
TACOMA, WA 98402
(253) 383 3257
RICK HULTZ

ELECTRICAL
TRAVIS FITZMAURICE & ASSOCIATES, INC.
1200 WESTLAKE AVE. N., SUITE 509
SEATTLE, WA 98109
(206) 285 7228
MIKE FITZMAURICE

CIVIL ENGINEER
INTEGRITY WORKS CONSULTING ENGINEERS
8206 184th STREET SW
EDMONDS, WA 98026
(206) 920–9410
(425) 670–2212 FAX
JOE MOON

LANDSCAPE ARCHITECT
TERRAFORMA DESIGN GROUP
5027 51ST AVENUE SW
SEATTLE, WA 98136
(206) 923–0590
(206) 923–3507 FAX
AKEMI SAKAIDA

GEOTECHNICAL
ASSOCIATED EARTH SCIENCES, INC.
911 FIFTH AVENUE, SUITE 100
KIRKLAND, WA 98033
(425) 827–7701
KURT MERRIMAN

HYDROLOGIST
ED McCARTHY, P.E., P.S.
9957 171ST AVENUE SE
RENTON, WA 98059
(425) 271–5734

KITCHEN
GEORGE E. BUNDY & ASSOCIATES
2520 COLBY AVENUE
EVERETT, WA 98201
(206) 523–9690
LEN BUNDY

LEGAL DESCRIPTION

LOTS 1 THROUGH 6, BLOCK 4, TOWN OF ENGLEWOOD, ACCORDING TO THE PLAT THEREOF RECORDED IN VOLUME 2 OF PLATS, PAGE 134, IN KING COUNTY, WASHINGTON PARCELS A, B AND C;

THAT PORTION OF THE NORTHWEST QUARTER OF SECTION 34, TOWNSHIP 24 NORTH, RANGE 6 EAST, W.M., IN KING COUNTY, WASHINGTON DESCRIBED AS PARCELS A, B, C, D, E, AND F AS DESCRIBED IN ATTACHED SURVEY.

ABBREVIATIONS

ACP	ACOUSTICAL CLG. PANEL	M, MIRR	MIRROR
AFF	ABOVE FINISHED FLOOR	MB	MARKER BOARD
ARCH	ARCHITECTURAL	MAX	MAXIMUM
AWP	ACOUSTICAL WALL PANEL	MTL	METAL
		MIN	MINIMUM
BLKG	BLOCKING	MJ	MASONRY JOINT
BR	BICYCLE RACK	MS	METAL SHELVING
BRG	BEARING		
BS	LIBRARY BOOK SHELF	NIC	NOT IN THIS CONTRACT
B/T	BETWEEN	NO.	NUMBER
		NTS	NOT TO SCALE
CIP	CAST IN PLACE		
CT'LSHG	COUNTERFLASHING	O/	OVER
CJ	CONTROL JOINT	O.C.	ON CENTER
CL	CENTER LINE	OD	OUTSIDE DIMENSION
CLG	CEILING	OFD	OVERFLOW ROOF DRAIN
CMU	CONCRETE BLOCK	OFS	OVERFLOW SCUPPER
CONC	CONCRETE	OH	OPPOSITE HAND
CONST	CONSTRUCTION		
CONT	CONTINUOUS	PC	POWDER COAT
COR	CORRIDOR	PERF, PERFOR.	PERFORATED
CPT	CARPET	P–LAM	PLASTIC LAMINATE
CS	CALCIUM SILICATE	PLYWD	PLYWOOD
CT	CERAMIC TILE	PREF.	PREFINISHED
		PSL	PARALLEL STRAND LUMBER
DB	DOCK BUMPERS	PT	PAINT
DF	DRINKING FOUNTAIN	P.T.	PRESSURE TREATED
DIA	DIAMETER	PTD	PAPER TOWEL DISPENSER
DIM	DIMENSION		
DN	DOWN	R	RISER, RADIUS
DO	DOOR OPENING	RD	ROOF DRAIN
D/TL	DETAIL	RM. RMS	ROOM, ROOMS
DR	DOOR	RO	ROUGH OPENING
DS	DOWNSPOUT	RB	RUBBER BASE
DSN	DOWNSPOUT NOZZLE		
DWG	DRAWING	SAV	STAIN AND VARNISH
		S.A.F.	SELF–ADHESIVE FLASHING
EA	EACH	S.A.M.	SELF–ADHESIVE MEMBRANE
EIFS	EXTERIOR INSULATION & FINISH SYSTEM	SB	SPLASH BLOCKS
		SCD	SEAT COVER DISPENSER
ELEV	ELEVATION	SD	SOAP DISPENSER
EJ	EXPANSION JOINT	SE	SCREW EYES
EM	ENTRY MAT	SEAL	SEALED CONCRETE
(E), E.	EXIST, EXISTING	SF	SQUARE FEET
EXT	EXTERIOR	SFC	SPECIAL FLOOR COVERING
		SG	SAFETY GLAZING
FAA	FIRE ALARM ANNUNCIATOR	SHT	SHEET
FAC	FACTORY FINISH	SIM	SIMILAR
FAP	FIRE ALARM PANEL	SND	SANITARY NAPKIN DISPENSER
FC	FIBER CEMENT	SNR	SANITARY NAPKIN RECEPTACLE
FIN FL	FINISH FLOOR	SPEC, SPECS	SPECIFICATIONS
FE	FIRE EXTINGUISHER	SS	STAINLESS STEEL
FLSHG	FLASHING	ST	STEEL
FOIC	FURNISHED BY OWNER – INSTALLED BY CONTRACTOR	STOR	STORAGE
		STRUCT	STRUCTURAL
FT	FOOT	SUSP	SUSPENDED
		SV	SHEET VINYL
GA	GAUGE		
GALV	GALVANIZED	TB	TACKBOARD
GB	GRAB BAR	TJ	TOOLED JOINT
GL	GLASS	TP	TOILET PAPER DISPENSER
GLB	GLU–LAM BEAM	TYP	TYPICAL
GWB	GYPSUM WALLBOARD		
		UR	URINAL
HD	HEAD		
HM	HOLLOW METAL	VB	VAPOR BARRIER
HO	MAGNETIC HOLD OPEN	VCT	VINYL COMPOSITION TILE
HT	HEIGHT		
		W/	WITH
IAS	INDOOR ATHLETIC SURFACING	W/O	WITHOUT
INSUL	INSULATION	W/R	WATER RESISTANT
INT	INTERIOR	WC	WATER CLOSET
		WD	WOOD
KB	KNOX BOX	WDP	WOOD PANELS
		WF	WOOD FINISH
LOC	LOCATION	WP	WATERPROOFING
		WRB	WEATHER RESISTIVE BARRIER

VICINITY MAP

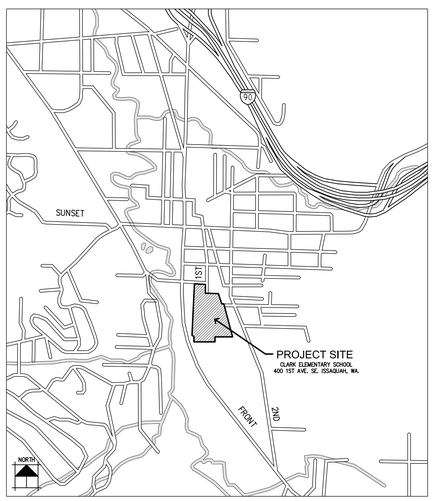

REFERENCE SYMBOLS

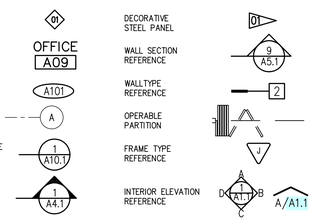

DRAWING INDEX

AC1	COVER SHEET
AC2	CIRCULATION PLAN
AC3	AREA 1 CODE PLANS
AC4	AREA 2 CODE PLAN
AC5	AREA 3 CODE PLAN

CIVIL

C1.00	COVER SHEET
C1.01	LEGENDS, SYMBOLS AND NOTES
C2.00	EXISTING CONDITIONS SURVEY
C2.01	EXISTING CONDITIONS SURVEY
C3.00	T.E.S.C. PLAN
C3.01	T.E.S.C. DETAILS
C3.02	T.E.S.C. DETAILS
C4.00	DEMOLITION OVERVIEW PLAN
C4.01	DEMOLITION PLAN
C4.02	DEMOLITION PLAN
C4.03	DEMOLITION NOTES
C4.04	DEMOLITION DETAILS
C5.00	GRADING OVERVIEW PLAN
C5.01	GRADING PLAN
C5.02	GRADING PLAN
C5.03	EAST DRIVEWAY PROFILE
C5.04	GRADING DETAILS
C6.00	STORM DRAINAGE OVER PLAN
C6.01	STORM DRAINAGE PLAN
C6.02	STORM DRAINAGE PLAN
C6.03	STORM DRAINAGE DETAILS
C6.04	STORM DRAINAGE DETAILS
C6.05	STORM DRAINAGE DETAILS
C6.06	STORM DRAINAGE DETAILS
C6.07	STORM DRAINAGE DETAILS
C6.08	STORM DRAINAGE DETAILS
C6.09	STORM DRAINAGE DETAILS
C7.00	WATER OVERVIEW PLAN
C7.01	WATER PLAN
C7.02	WATER PLAN
C7.03	WATER PROFILE
C7.04	WATER PROFILE
C7.05	WATER DETAILS
C7.06	WATER DETAILS
C8.00	SANITARY SEWER OVERVIEW PLAN
C8.01	SANITARY SEWER PLAN
C8.02	SANITARY SEWER PLAN
C8.03	SANITARY SEWER PROFILE
C8.04	SANITARY SEWER DETAILS
C8.05	SANITARY SEWER DETAILS
C9.00	HORIZONTAL CONTROL AND PAVING OVERVIEW PLAN
C9.01	HORIZONTAL CONTROL AND PAVING PLAN
C9.02	HORIZONTAL CONTROL AND PAVING PLAN
C9.03	PAVING DETAILS
C9.04	PAVING DETAILS
C9.05	PAVING DETAILS
C9.06	PAVING DETAILS
C10.00	SIGNAGE AND STRIPING OVERVIEW PLAN
C10.01	SIGNAGE AND STRIPING PLAN
C10.02	SIGNAGE AND STRIPING PLAN
C10.03	SIGNAGE AND STRIPING DETAILS
C10.04	SIGNAGE AND STRIPING DETAILS
C11.00	FIRE EHICLE ACCESS ANALYSIS OVERVIEW PLAN
C11.01	FIRE VEHICLE ACCESS ANALYSIS
C11.02	FIRE VEHICLE ACCESS ANALYSIS

LANDSCAPE

L1.1	LANDSCAPE PLAN
L1.2	LANDSCAPE PLAN
L1.3	LANDSCAPE LEGEND, DETAILS & NOTES
L3.1	PARTIAL TREE RETENTION PLAN
L3.2	PARTIAL TREE RETENTION PLAN

SITE

A1.1	OVERALL SITE PLAN
A1.2	PARTIAL SITE PLAN
A1.3	PARTIAL SITE PLAN
A1.4	SITE SECTIONS
A1.5	SITE DETAILS
A1.6	SITE DETAILS

ARCHITECTURAL

A2.0	OVERALL FIRST FLOOR PLAN
A2.1	OVERALL 2ND, 4RD, EQUIP. PLATFORM FLOOR PLANS & PLAY BLDG.'S
A3.11	EXTERIOR ELEVATIONS
A3.12	EXTERIOR ELEVATIONS
A3.13	EXTERIOR ELEVATIONS
A3.14	EXTERIOR ELEVATIONS

Cornerstone ARCHITECTURAL GROUP
6161 NE 175th Street, Suite 101
Kenmore, Washington 98028
Phone: 206.682.5000
cornerstonearch.com

© Cornerstone Architectural Group

3054 REGISTERED ARCHITECT
STEVEN A. BARNES
STATE OF WASHINGTON

CLARK ELEMENTARY SCHOOL
ISSAQUAH SCHOOL DISTRICT
400 1st AVE. SE
ISSAQUAH, WASHINGTON 98027

PERMIT SET
SHEET TITLE: COVER SHEET

DATE: 5-3-16
PROJECT NO: 191406
REVISIONS:

AC1

PLOT DATE: 04/29/16 07:42 DRAWING NAME: K:\EDUCATIONAL\Issaquah\Clark Elem & Gibson EK HS\Drawings Clark Elem\AC1 Cover Sheet\AC1 – Site Permit.dwg

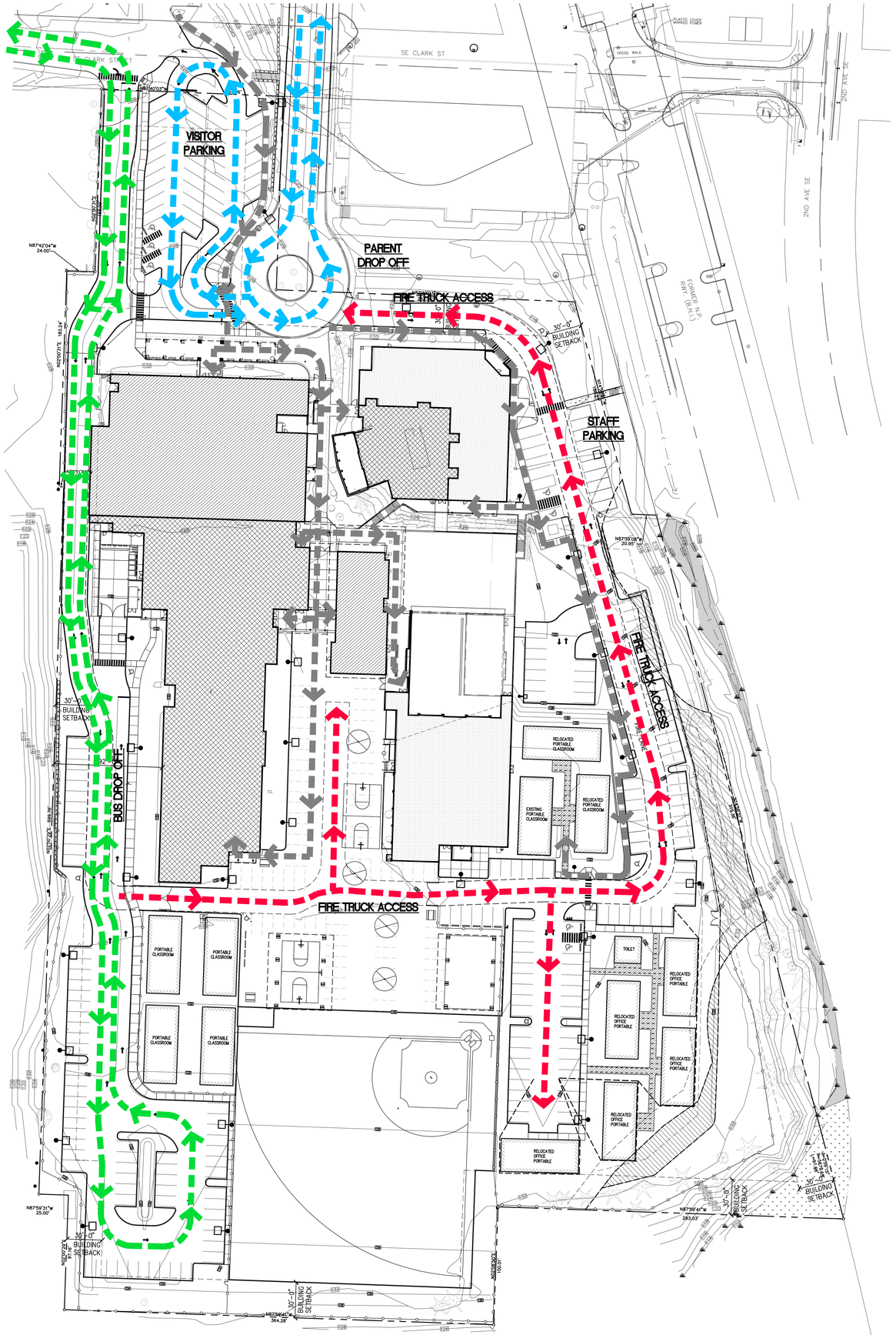

LEGEND
PEDESTRICAN CIRCULATION
BUS DROP OFF CIRCULATION
PARENT DROP OFF CIRCULATION
FIRE LOOP AND "T'S"

NORTH

CIRCULATIONPLAN

SCALE: 1"= 40'-0"

Cornerstone
ARCHITECTURAL GROUP
6161 NE 175th Street, Suite 101
Kenmore, Washington 98028
Phone: 206.682.5000
cornerstonearch.com

© Cornerstone Architectural Group

3954 REGISTERED ARCHITECT
STEVEN A. BARNES
STATE OF WASHINGTON

CLARK ELEMENTARY SCHOOL
ISSAQUAH SCHOOL DISTRICT
400 1st AVE. SE
ISSAQUAH, WASHINGTON 98027

PERMIT SET

SHEET TITLE: CIRCULATION PLAN

DATE: 4-15-16

PROJECT NO: 191406

REVISIONS:

AC2

PLOT DATE: 04/18/16 09:06 DRAWING NAME: K:\EDUCATIONAL\issaquah\Clark Elem & Gibson EK HS\Drawings Clark Elem\AC2 Site Access\AC2.dwg

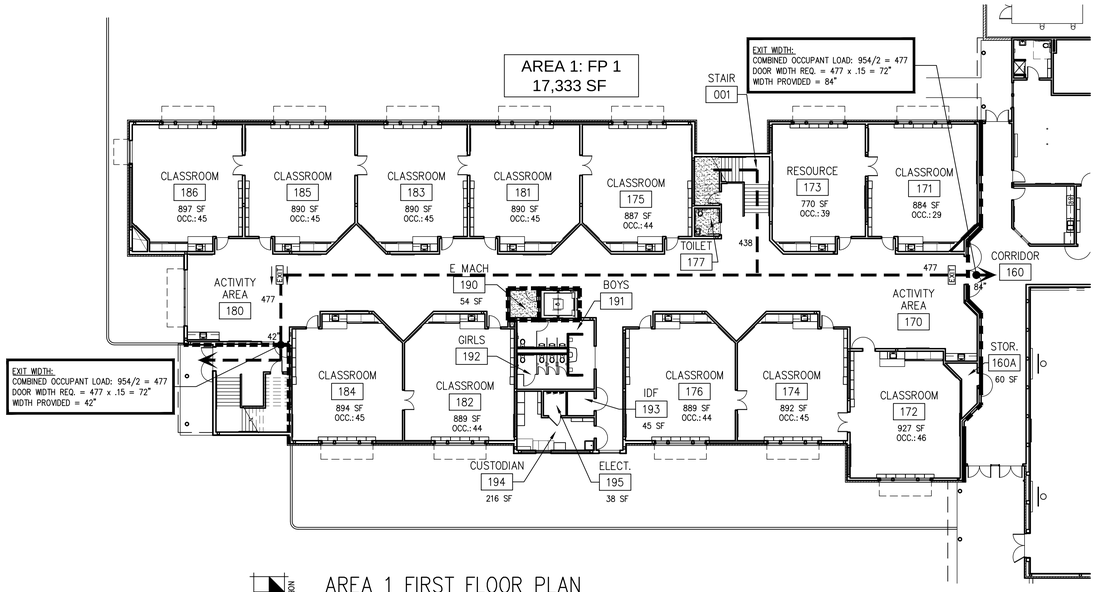

NORTH

AREA 1 FIRST FLOOR PLAN

A2.0 SCALE: 1/16"= 1'-0"

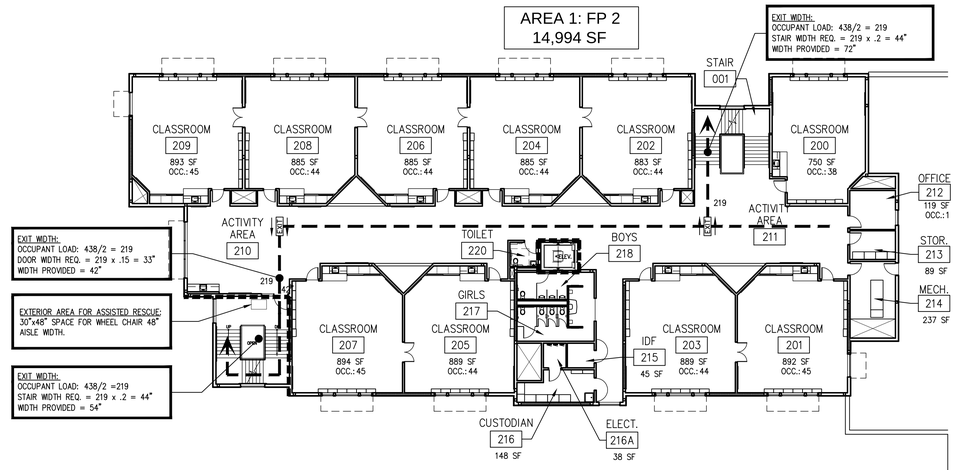

NORTH

AREA 1 SECOND FLOOR PLAN

A2.0 SCALE: 1/16"= 1'-0"

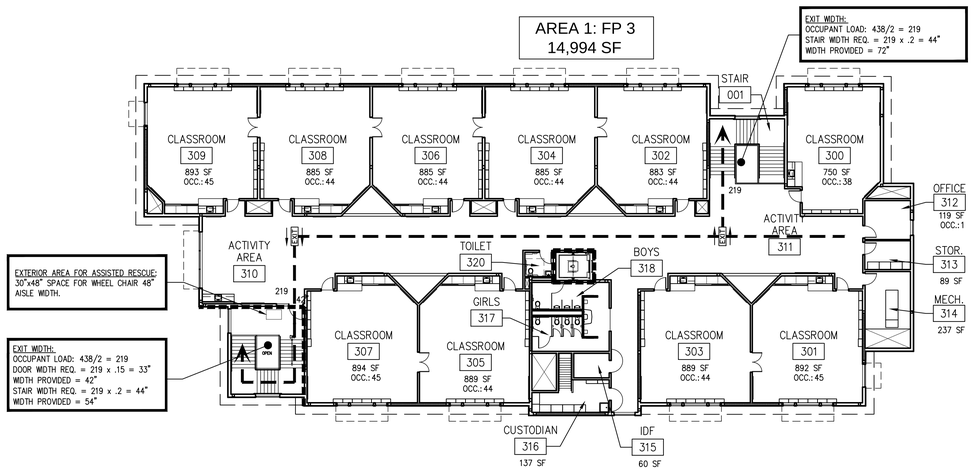

NORTH

AREA 1 THIRD FLOOR PLAN

A2.0 SCALE: 1/16"= 1'-0"

GENERAL NOTES

1. PER TABLE 706.4, GROUP E OCCUPANCY IS REQUIRED TO HAVE A 3 HOUR FIRE-RESISTANCE RATING. IN TYPE II OR V CONSTRUCTION, WALLS ARE PERMITTED TO HAVE A 2 HOUR FIRE-RESISTANCE RATING.
2. OPENINGS IN ROOFS MUST BE 4' AWAY FROM A FIRE WALL.
3. EXTEND FIRE WALL CONSTRUCTION 4' FROM END OF WALL IN BOTH DIRECTIONS.
4. FIRE WALLS THAT STOP AT THE UNDERSIDE OF A COMBUSTIBLE ROOF MUST HAVE ROOF SHEATHING OR DECK CONSTRUCTED OF FIRE RETARDANT TREATED WOOD FOR 4' MIN. ON BOTH SIDES OF THE WALL AS WELL AS ⅝" TYPE "X" GWB DIRECTLY BENEATH THE UNDERSIDE OF THE ROOF SHEATHING OR DECK FOR 4' MIN. ON BOTH SIDES OF THE WALL.

IBC NOTES

1. AN ENCLOSED ELEVATOR LOBBY IS NOT REQUIRED PER IBC 713.14.1, EXCEPTION 4 SINCE THE BUILDING DOES NOT EXCEED THREE STORIES NOR 75 FEET PER 713.14.1 EXCEPTION 4.3.
2. AN ENCLOSED EXIT ACCESS STAIRWAY IS NOT REQUIRED PER IBC 1009.3, EXCEPTION 4 SINCE THE BUILDING IS LESS THAN 4 STORIES AND FULLY FIRE SPRINKLERED. A DRAFT CURTAIN WITH CLOSELY SPACED SPRINKLER HEADS WILL BE UTILIZED TO CUT THE STAIR AREA OFF FROM THE MAIN BUILDING PER IBC COMMENTARY FIGURE 1009.3.
3. EQUIPMENT PLATFORM SHALL NOT BE CONSIDERED TO BE A PORTION OF THE FLOOR BELOW AND NOT CONTRIBUTE TO THE BUILDING AREA OR STORIES PER IBC 505.3.
4. 2 HOUR AREA SEPARATION WILL BE USED BETWEEN THE IIB AND VB BUILDING CONSTRUCTION TYPES.
5. ELEVATOR WILL BE DESIGNED TO ACCOMODATE AN ABMULANCE STRETCHER 24"X84" PER IBC 3002.4.

BUILDING HEIGHT

BUILDING HEIGHT LIMIT: TYPE IIB = 55' PER IBC TABLE 503.

BUILDING HEIGHT INCREASE PER IBC 504.2 = 20'

TOTAL BUILDING HEIGHT LIMIT = 75'

ACTUAL BUILDING HEIGHT = 62'

AREA CALCULATIONS

AREA 1: 3-STORY CLASSROOM (FULLY SPRINKLERED):

OCCUPANCY GROUP: E
CONSTRUCTION TYPE: II-B (FULLY SPRINKLERED)

MAXIMUM ALLOWABLE FLOOR AREA:

BASIC ALLOWABLE BUILDING AREA (TABLE 503):
9,500 SQ.FT.
FRONTAGE INCREASE PER 506.2:

$W = (L1 \times w1 + L2 \times w2)/F$ (EQUATION 5-3)

$W = (533.75' \times 30' + 16.66' \times 19')/636.91'$

$W = 29.67$

$I_f = [\frac{F}{P} - 0.25]\frac{W}{30}$ (EQUATION 5-2)

$I_f = [\frac{550.41}{636.91} - 0.25]\frac{29.67}{30}$

$I_f = 0.61$

AUTOMATIC SPRINKLER SYSTEM INCREASE PER 506.3
$I_s = 200\% \ (I_s = 2)$

AREA DETERMINATION PER 506.1

$A_a = A_a + [A_t \times I_f] + [A_t \times I_s]$

$A_a = 14{,}500 + [14{,}500 \times 0.61] + [14{,}500 \times 2]$

$A_a = 14{,}500 + [8{,}845] + [29{,}000]$

$A_a = 52{,}345$ sq.ft.

ACTUAL FLOOR AREA
FLOOR 1: 17,494 SQUARE FEET
FLOOR 2: 14,994 SQUARE FEET
FLOOR 3: 14,994 SQUARE FEET

AREA 2: GYM / COMMONS (FULLY SPRINKLERED):

OCCUPANCY GROUP: E
CONSTRUCTION TYPE: V-B (FULLY SPRINKLERED)

MAXIMUM ALLOWABLE FLOOR AREA:

BASIC ALLOWABLE BUILDING AREA (TABLE 503):
9,500 SQ.FT.
FRONTAGE INCREASE PER 506.2:

$W = (L1 \times w1 + L2 \times w2)/F$ (EQUATION 5-3)

$W = (625.16' \times 30' + 96.33' \times 21.5')/925'$

$W = 28.87$

$I_f = [\frac{F}{P} - 0.25]\frac{W}{30}$ (EQUATION 5-2)

$I_f = [\frac{723.49}{925} - 0.25]\frac{28.87}{30}$

$I_f = 0.51$

AUTOMATIC SPRINKLER SYSTEM INCREASE PER 506.3
$I_s = 300\% \ (I_s = 3)$

AREA DETERMINATION PER 506.1

$A_a = A_a + [A_t \times I_f] + [A_t \times I_s]$

$A_a = 9{,}500 + [9{,}500 \times 0.51] + [9{,}500 \times 3]$

$A_a = 9{,}500 + [4{,}845] + [28{,}500]$

$A_a = 42{,}845$ sq.ft.

ACTUAL FLOOR AREA
32,960 SQUARE FEET

AREA 3: CLASSROOM / GYM (FULLY SPRINKLERED):

OCCUPANCY GROUP: E
CONSTRUCTION TYPE: V-B (FULLY SPRINKLERED)

MAXIMUM ALLOWABLE FLOOR AREA:

BASIC ALLOWABLE BUILDING AREA (TABLE 503):
9,500 SQ.FT.
FRONTAGE INCREASE PER 506.2:

$W = (L1 \times w1 + L2 \times w2)/F$ (EQUATION 5-3)

$W = (781.16' \times 30' + 50.16' \times 23.75')/921.67'$

$W = 29.62$

$I_f = [\frac{F}{P} - 0.25]\frac{W}{30}$ (EQUATION 5-2)

$I_f = [\frac{831.32}{921.67} - 0.25]\frac{29.62}{30}$

$I_f = 0.64$

AUTOMATIC SPRINKLER SYSTEM INCREASE PER 506.3
$I_s = 300\% \ (I_s = 3)$

AREA DETERMINATION PER 506.1

$A_a = A_a + [A_t \times I_f] + [A_t \times I_s]$

$A_a = 9{,}500 + [9{,}500 \times 0.64] + [9{,}500 \times 3]$

$A_a = 9{,}500 + [6{,}080] + [28{,}500]$

$A_a = 44{,}080$ sq.ft.

ACTUAL FLOOR AREA
24,681 SQUARE FEET

AREA 4: 2-STORY CLASSROOM (FULLY SPRINKLERED):

OCCUPANCY GROUP: E
CONSTRUCTION TYPE: V-B (FULLY SPRINKLERED)

MAXIMUM ALLOWABLE FLOOR AREA:

BASIC ALLOWABLE BUILDING AREA (TABLE 503):
9,500 SQ.FT.
FRONTAGE INCREASE PER 506.2:

$W = (L1 \times w1 + L2 \times w2)/F$ (EQUATION 5-3)

$W = (513.25' \times 30' + 19.83' \times 21.5')/615.5'$

$W = 29.93$

$I_f = [\frac{F}{P} - 0.25]\frac{W}{30}$ (EQUATION 5-2)

$I_f = [\frac{533.08}{615.5} - 0.25]\frac{29.93}{30}$

$I_f = 0.61$

AUTOMATIC SPRINKLER SYSTEM INCREASE PER 506.3
$I_s = 300\% \ (I_s = 3)$

AREA DETERMINATION PER 506.1

$A_a = A_a + [A_t \times I_f] + [A_t \times I_s]$

$A_a = 9{,}500 + [9{,}500 \times 0.61] + [9{,}500 \times 3]$

$A_a = 9{,}500 + [5{,}795] + [28{,}500]$

$A_a = 43{,}795$ sq.ft.

ACTUAL FLOOR AREA
FLOOR 1: 15,292 SQUARE FEET
FLOOR 2: 6,895 SQUARE FEET

COVERED PLAY A (NOT SPRINKLERED):

OCCUPANCY GROUP: E
CONSTRUCTION TYPE: V-B (FULLY SPRINKLERED)

MAXIMUM ALLOWABLE FLOOR AREA:
BASIC ALLOWABLE BUILDING AREA (TABLE 503):
9,500 SQ.FT.
ALLOWABLE HEIGHT: 35'-0"
ACTUAL FLOOR AREA: 2,400 SQUARE FEET
ACTUAL HEIGHT: 27 FEET

PORTABLES (NOT SPRINKLERED):

OCCUPANCY GROUP: E
CONSTRUCTION TYPE: V-B (FULLY SPRINKLERED)

MAXIMUM ALLOWABLE FLOOR AREA:
BASIC ALLOWABLE BUILDING AREA (TABLE 503):
9,500 SQ.FT.
ALLOWABLE HEIGHT: 35'-0"
ACTUAL FLOOR AREA: 1,625 SQUARE FEET
ACTUAL HEIGHT: 20 FEET

COVERED PLAY B (NOT SPRINKLERED):

OCCUPANCY GROUP: E
CONSTRUCTION TYPE: V-B (FULLY SPRINKLERED)

MAXIMUM ALLOWABLE FLOOR AREA:
BASIC ALLOWABLE BUILDING AREA (TABLE 503):
9,500 SQ.FT.
ALLOWABLE HEIGHT: 35'-0"
ACTUAL FLOOR AREA: 2,400 SQUARE FEET
ACTUAL HEIGHT: 27 FEET

LEGEND

- NEW OR EXISTING 2 HOUR WALLS TO REMAIN, SEE WALL TYPE 1 & 12/A2.9 AND 2/A2.9 FOR WALL PENETRATIONS.
- NEW OR EXISTING 1 HOUR WALLS TO REMAIN, SEE WALL TYPES 5, 6, & 8/A2.9 AND 2/A2.9 FOR WALL PENETRATIONS.
- EVACUATION ROUTE
- FEC — FIRE EXTINGUISHER CABINET
- FAA — FIRE ALARM ANNUCIATOR
- FAP — FIRE ALARM PANEL
- EXIT — EXIT SIGN W/ DIRECTION
- 1 HOUR LID, SEE 1/A2.9

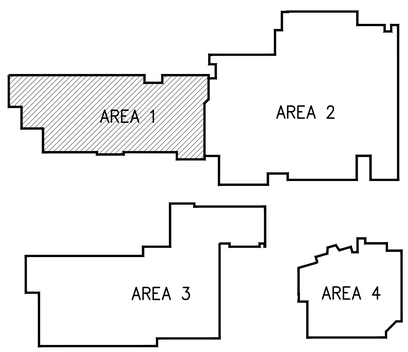

NORTH

KEY PLAN

SCALE: NTS

Cornerstone
ARCHITECTURAL GROUP
Phone: 206.682.5000
cornerstonearch.com
6161 NE 175th Street, Suite 101
Kenmore, Washington 98028

© Cornerstone Architectural Group

3054 REGISTERED ARCHITECT
STEVEN A. BARNES
STATE OF WASHINGTON

CLARK ELEMENTARY SCHOOL
ISSAQUAH SCHOOL DISTRICT
400 1st AVE. SE
ISSAQUAH, WASHINGTON 98027

PERMIT SET
SHEET TITLE: AREA 1 CODE PLANS

DATE: 4-15-16
PROJECT NO: 191406
REVISIONS:

AC3

PLOT DATE: 04/18/16 09:02 DRAWING NAME: K:\EDUCATIONAL\issaquah\Clark Elem & Gibson EK HS\Drawings Clark Elem\AC3_4 Code Plan\AC3.dwg

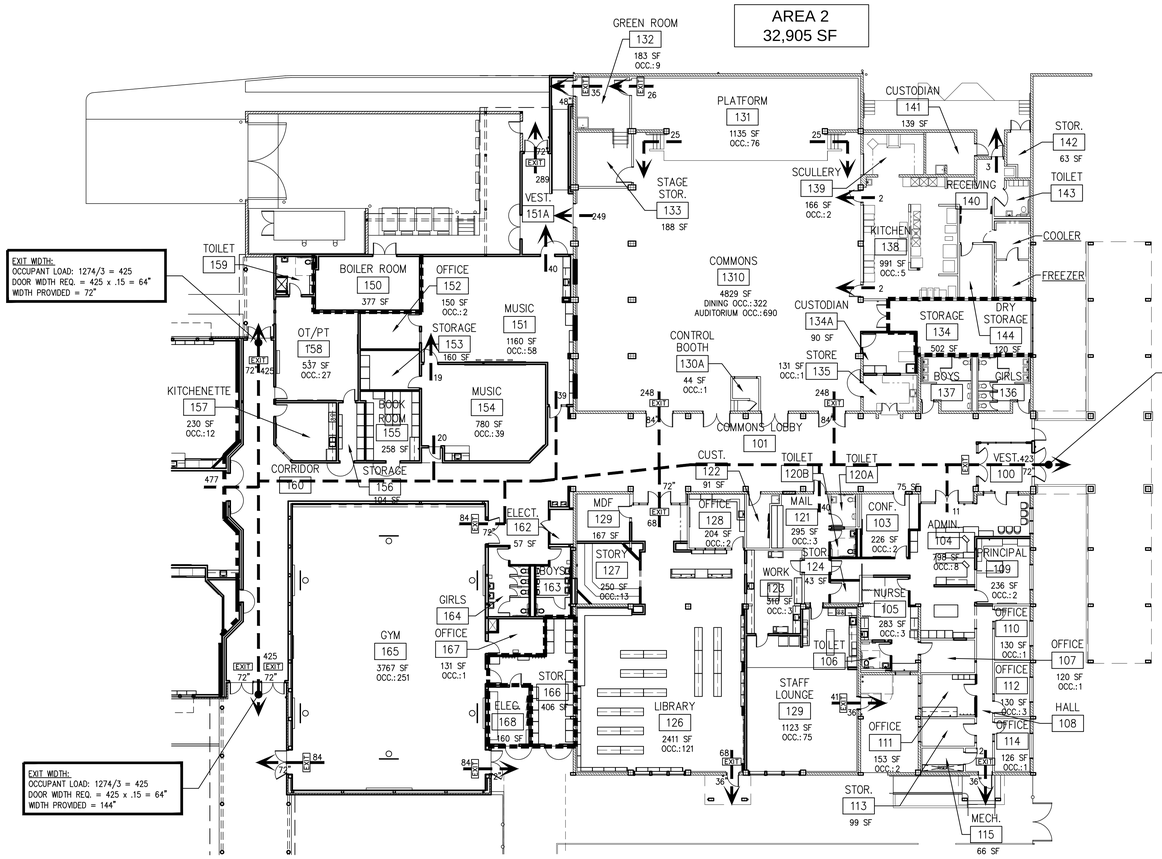

HUBON

AREA 2 FIRST FLOOR PLAN

A2.0

SCALE: 1/16" = 1'-0"

GENERAL NOTES

1. PER TABLE 706.4, GROUP E OCCUPANCY IS REQUIRED TO HAVE A 3 HOUR FIRE-RESISTANCE RATING. IN TYPE II OR V CONSTRUCTION, WALLS ARE PERMITTED TO HAVE A 2 HOUR FIRE-RESISTANCE RATING.
2. OPENINGS IN ROOFS MUST BE 4' AWAY FROM A FIRE WALL.
3. EXTEND FIRE WALL CONSTRUCTION 4' FROM END OF WALL IN BOTH DIRECTIONS.
4. FIRE WALLS THAT STOP AT THE UNDERSIDE OF A COMBUSTIBLE ROOF MUST HAVE ROOF SHEATHING OR DECK CONSTRUCTED OF FIRE RETARDANT TREATED WOOD FOR 4' MIN. ON BOTH SIDES OF THE WALL AS WELL AS ⅝" TYPE 'X' GWB DIRECTLY BENEATH THE UNDERSIDE OF THE ROOF SHEATHING OR DECK FOR 4' MIN. ON BOTH SIDES OF THE WALL.

IBC NOTES

1. AN ENCLOSED ELEVATOR LOBBY IS NOT REQUIRED PER IBC 713.14.1, EXCEPTION 4 SINCE THE BUILDING DOES NOT EXCEED THREE STORIES NOR 75 FEET PER 713.14.1 EXCEPTION 4.3.
2. AN ENCLOSED EXIT ACCESS STAIRWAY IS NOT REQUIRED PER IBC 1009.3, EXCEPTION 4 SINCE THE BUILDING IS LESS THAN 4 STORIES AND FULLY FIRE SPRINKLERED. A DRAFT CURTAIN WITH CLOSELY SPACED SPRINKLER HEADS WILL BE UTILIZED TO CUT THE STAIR AREA OFF FROM THE MAIN BUILDING PER IBC COMMENTARY FIGURE 1009.3.
3. EQUIPMENT PLATFORM SHALL NOT BE CONSIDERED TO BE A PORTION OF THE FLOOR BELOW AND NOT CONTRIBUTE TO THE BUILDING AREA OR STORIES PER IBC 505.3.
4. 2 HOUR AREA SEPARATION WILL BE USED BETWEEN THE IIB AND VB BUILDING CONSTRUCTION TYPES.
5. ELEVATOR WILL BE DESIGNED TO ACCOMODATE AN ABMULANCE STRETCHER 24"X84" PER IBC 3002.4.

BUILDING HEIGHT

BUILDING HEIGHT LIMIT: TYPE IIB = 55' PER IBC TABLE 503.

BUILDING HEIGHT INCREASE PER IBC 504.2 = 20'

TOTAL BUILDING HEIGHT LIMIT = 75'

ACTUAL BUILDING HEIGHT = 62'

AREA CALCULATIONS

AREA 1: 3-STORY CLASSROOM (FULLY SPRINKLERED):

OCCUPANCY GROUP: E
CONSTRUCTION TYPE: II-B (FULLY SPRINKLERED)

MAXIMUM ALLOWABLE FLOOR AREA:

BASIC ALLOWABLE BUILDING AREA (TABLE 503):
14,500 SQ.FT.
FRONTAGE INCREASE PER 506.2:

$W = (L1 \times w1 + L2 \times w2)/F$ (EQUATION 5-3)

$W = (533.75' \times 30' + 16.66' \times 19')/636.91'$

$W = 28.87$

$I_f = [\frac{F}{P} - 0.25]\frac{W}{30}$ (EQUATION 5-2)

$I_f = [\frac{550.41}{636.91} - 0.25]\frac{28.87}{30}$

$I_f = 0.61$

AUTOMATIC SPRINKLER SYSTEM INCREASE PER 506.3
$I_S = 200\%$ ($I_S = 2$)

AREA DETERMINATION PER 506.1

$A_a = A_a + [A_t \times I_f] + [A_t \times I_s]$

$A_a = 14{,}500 + [14{,}500 \times 0.61] + [14{,}500 \times 2]$

$A_a = 14{,}500 + [8{,}845] + [29{,}000]$

$A_a = 52{,}345$ sq.ft.

ACTUAL FLOOR AREA

FLOOR 1: 17,494 SQUARE FEET
FLOOR 2: 14,994 SQUARE FEET
FLOOR 3: 14,994 SQUARE FEET

AREA 2: GYM / COMMONS (FULLY SPRINKLERED):

OCCUPANCY GROUP: E
CONSTRUCTION TYPE: V-B (FULLY SPRINKLERED)

MAXIMUM ALLOWABLE FLOOR AREA:

BASIC ALLOWABLE BUILDING AREA (TABLE 503):
9,500 SQ.FT.
FRONTAGE INCREASE PER 506.2:

$W = (L1 \times w1 + L2 \times w2)/F$ (EQUATION 5-3)

$W = (625.16' \times 30' + 96.33' \times 21.5')/925'$

$W = 28.87$

$I_f = [\frac{F}{P} - 0.25]\frac{W}{30}$ (EQUATION 5-2)

$I_f = [\frac{721.49}{925} - 0.25]\frac{28.87}{30}$

$I_f = 0.51$

AUTOMATIC SPRINKLER SYSTEM INCREASE PER 506.3
$I_S = 300\%$ ($I_S = 3$)

AREA DETERMINATION PER 506.1

$A_a = A_a + [A_t \times I_f] + [A_t \times I_s]$

$A_a = 9{,}500 + [9{,}500 \times 0.51] + [9{,}500 \times 3]$

$A_a = 9{,}500 + [4{,}845] + [28{,}500]$

$A_a = 42{,}845$ sq.ft.

ACTUAL FLOOR AREA

32,960 SQUARE FEET

AREA 3: CLASSROOM / GYM (FULLY SPRINKLERED):

OCCUPANCY GROUP: E
CONSTRUCTION TYPE: V-B (FULLY SPRINKLERED)

MAXIMUM ALLOWABLE FLOOR AREA:

BASIC ALLOWABLE BUILDING AREA (TABLE 503):
9,500 SQ.FT.
FRONTAGE INCREASE PER 506.2:

$W = (L1 \times w1 + L2 \times w2)/F$ (EQUATION 5-3)

$W = (781.16' \times 30' + 50.16' \times 23.75')/921.67'$

$W = 29.62$

$I_f = [\frac{F}{P} - 0.25]\frac{W}{30}$ (EQUATION 5-2)

$I_f = [\frac{631.32}{921.67} - 0.25]\frac{29.62}{30}$

$I_f = 0.64$

AUTOMATIC SPRINKLER SYSTEM INCREASE PER 506.3
$I_S = 300\%$ ($I_S = 3$)

AREA DETERMINATION PER 506.1

$A_a = A_a + [A_t \times I_f] + [A_t \times I_s]$

$A_a = 9{,}500 + [9{,}500 \times 0.64] + [9{,}500 \times 3]$

$A_a = 9{,}500 + [6{,}080] + [28{,}500]$

$A_a = 44{,}080$ sq.ft.

ACTUAL FLOOR AREA

24,681 SQUARE FEET

AREA 4: 2-STORY CLASSROOM (FULLY SPRINKLERED):

OCCUPANCY GROUP: E
CONSTRUCTION TYPE: V-B (FULLY SPRINKLERED)

MAXIMUM ALLOWABLE FLOOR AREA:

BASIC ALLOWABLE BUILDING AREA (TABLE 503):
9,500 SQ.FT.
FRONTAGE INCREASE PER 506.2:

$W = (L1 \times w1 + L2 \times w2)/F$ (EQUATION 5-3)

$W = (513.25' \times 30' + 19.83' \times 21.5')/615.5'$

$W = 29.93$

$I_f = [\frac{F}{P} - 0.25]\frac{W}{30}$ (EQUATION 5-2)

$I_f = [\frac{533.08}{615.5} - 0.25]\frac{29.93}{30}$

$I_f = 0.61$

AUTOMATIC SPRINKLER SYSTEM INCREASE PER 506.3
$I_S = 300\%$ ($I_S = 3$)

AREA DETERMINATION PER 506.1

$A_a = A_a + [A_t \times I_f] + [A_t \times I_s]$

$A_a = 9{,}500 + [9{,}500 \times 0.61] + [9{,}500 \times 3]$

$A_a = 9{,}500 + [5{,}795] + [28{,}500]$

$A_a = 43{,}795$ sq.ft.

ACTUAL FLOOR AREA

FLOOR 1: 15,292 SQUARE FEET
FLOOR 2: 6,895 SQUARE FEET

COVERED PLAY A (NOT SPRINKLERED):

OCCUPANCY GROUP: E
CONSTRUCTION TYPE: V-B (FULLY SPRINKLERED)

MAXIMUM ALLOWABLE FLOOR AREA:

BASIC ALLOWABLE BUILDING AREA (TABLE 503):
9,500 SQ.FT.
ALLOWABLE HEIGHT: 35'-0"
ACTUAL FLOOR AREA: 2,400 SQUARE FEET
ACTUAL HEIGHT: 27 FEET

PORTABLES (NOT SPRINKLERED):

OCCUPANCY GROUP: E
CONSTRUCTION TYPE: V-B (FULLY SPRINKLERED)

MAXIMUM ALLOWABLE FLOOR AREA:

BASIC ALLOWABLE BUILDING AREA (TABLE 503):
9,500 SQ.FT.
ALLOWABLE HEIGHT: 35'-0"
ACTUAL FLOOR AREA: 1,625 SQUARE FEET
ACTUAL HEIGHT: 20 FEET

COVERED PLAY B (NOT SPRINKLERED):

OCCUPANCY GROUP: E
CONSTRUCTION TYPE: V-B (FULLY SPRINKLERED)

MAXIMUM ALLOWABLE FLOOR AREA:

BASIC ALLOWABLE BUILDING AREA (TABLE 503):
9,500 SQ.FT.
ALLOWABLE HEIGHT: 35'-0"
ACTUAL FLOOR AREA: 2,400 SQUARE FEET
ACTUAL HEIGHT: 27 FEET

LEGEND

- NEW OR EXISTING 2 HOUR WALLS TO REMAIN, SEE WALL TYPE 1 & 12/A2.9 AND 2/A2.9 FOR WALL PENETRATIONS.
- NEW OR EXISTING 1 HOUR WALLS TO REMAIN, SEE WALL TYPES 5, 6, & 8/A2.9 AND 2/A2.9 FOR WALL PENETRATIONS.
- EVACUATION ROUTE
- FEC — FIRE EXTINGUISHER CABINET
- FAA — FIRE ALARM ANNUCIATOR
- FAP — FIRE ALARM PANEL
- EXIT — EXIT SIGN W/ DIRECTION
- 1 HOUR LID, SEE 1/A2.9

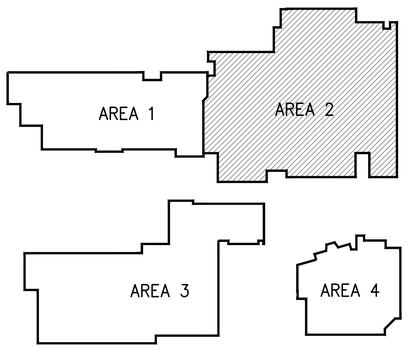

NORTH

KEY PLAN

SCALE: NTS

Cornerstone
ARCHITECTURAL GROUP
Phone: 206.682.5000
cornerstonearch.com
6161 NE 175th Street, Suite 101
Kenmore, Washington 98028

© Cornerstone Architectural Group

3054 REGISTERED ARCHITECT
STEVEN A. BARNES
STATE OF WASHINGTON

CLARK ELEMENTARY SCHOOL
ISSAQUAH SCHOOL DISTRICT
400 1st AVE. SE
ISSAQUAH, WASHINGTON 98027

PERMIT SET

SHEET TITLE: AREA 2 CODE PLAN

PROJECT NO: 191406

DATE: 4-15-16

REVISIONS:

AC4

PLOT DATE: 04/18/16 10:11 DRAWING NAME: K:\EDUCATIONAL\Issaquah\Clark Elem & Gibson EK HS\Drawings Clark Elem\AC3_4 Code Plan\AC4.dwg

SW1/4, NW1/4, SEC. 34, TWP. 24N, RGE 6E., W.M.

LEGAL DESCRIPTION

PARCEL A: (2354300290)

LOTS 5 AND 6, BLOCK 4, TOWN OF ENGLEWOOD, ACCORDING TO THE PLAT THEREOF RECORDED IN VOLUME 2 OF PLATS, PAGE 134, IN KING COUNTY, WASHINGTON;

TOGETHER WITH THE NORTH HALF OF VACATED ALLEY ADJOINING AS VACATED CITY OF ISSAQUAH ORDINANCE NUMBER 1085 AND RECORDED UNDER RECORDING NUMBER 7111120425.

PARCEL B: (2354300285)

LOT 4, BLOCK 4, TOWN OF ENGLEWOOD, ACCORDING TO THE PLAT THEREOF RECORDED IN VOLUME 2 OF PLATS, PAGE 134, IN KING COUNTY, WASHINGTON;

TOGETHER WITH THE NORTH HALF OF VACATED ALLEY ADJOINING AS VACATED UNDER CITY OF ISSAQUAH ORDINANCE NUMBER 1085 AND RECORDED AS RECORDING NUMBER 7111120425;

AND TOGETHER WITH THE WEST HALF OF VACATED 1ST AVENUE SOUTHEAST ADJOINING AS VACATED UNDER CITY OF ISSAQUAH ORDINANCE NUMBER 1085 AND RECORDED AS RECORDING NUMBER 7111120425;
EXCEPT THAT PORTION OF VACATED 1ST AVENUE SOUTHEAST CONVEYED TO THE CITY OF ISSAQUAH BY WARRANTY DEED RECORDED AS RECORDING NUMBER 8907190226;

TOGETHER WITH THAT PORTION OF THE NORTHWEST QUARTER OF THE NORTHWEST QUARTER OF SECTION 34, TOWNSHIP 24 NORTH, RANGE 6 EAST, W.M., IN KING COUNTY WASHINGTON, DESCRIBED AS FOLLOWS:

ALL THAT PORTION DESCRIBED IN DEED RECORDED UNDER KING COUNTY RECORDING NUMBER 8907190226 LYING WITHIN VACATED 1ST AVENUE SOUTHEAST ADJOINING LOT 4 OF BLOCK 4 AND LOT 12 OF BLOCK 5 OF SAID PLAT OF TOWN OF ENGLEWOOD LYING WEST OF A LINE PARALLEL WITH AND 4.00 FEET EAST OF THE EAST LINE OF SAID LOT 4, AS SAID STREETS ARE DEPICTED IN THAT CERTAIN SURVEY FOR THE CITY OF ISSAQUAH RECORDED IN BOOK 54 OF SURVEYS PAGE 216, RECORDING NUMBER 8704029006, IN KING COUNTY, WASHINGTON.

PARCEL C: (2354300270)

LOTS 1 THROUGH 3, INCLUSIVE, BLOCK 4, TOWN OF ENGLEWOOD, ACCORDING TO THE PLAT THEREOF RECORDED IN VOLUME 2 OF PLATS, PAGE 134, IN KING COUNTY, WASHINGTON;

TOGETHER WITH THE SOUTH HALF OF VACATED ALLEY ADJOINING AS VACATED UNDER CITY OF ISSAQUAH ORDINANCE NUMBER 1085 AND RECORDED AS RECORDING NUMBER 7111120425;

AND TOGETHER WITH VACATED SOUTHEAST DARST STREET ADJOINING AS VACATED UNDER CITY OF ISSAQUAH ORDINANCE NUMBER 1085 AND RECORDED AS RECORDING NUMBER 7111120425.

PARCEL D: (2354300315)

LOTS 1 THROUGH 5, INCLUSIVE, BLOCK 5, TOWN OF ENGLEWOOD, ACCORDING TO THE PLAT THEREOF RECORDED IN VOLUME 2 OF PLATS, PAGE 134, IN KING COUNTY WASHINGTON;

TOGETHER WITH VACATED SOUTHEAST DARST STREET ADJOINING AS VACATED UNDER CITY OF ISSAQUAH ORDINANCE NUMBER 1085 AND RECORDED AS RECORDING NUMBER 7111120425;

AND TOGETHER WITH THE SOUTH HALF OF VACATED ALLEY ADJOINING AS VACATED UNDER CITY OF ISSAQUAH ORDINANCE NUMBER 1085 AND RECORDED AS RECORDING NUMBER 7111120425;
EXCEPT THAT PORTION OF VACATED ALLEY CONVEYED TO THE CITY OF ISSAQUAH BY WARRANTY DEED RECORDED UNDER RECORDING NUMBER 9403252743.

PARCEL E: (3424069028)

BEGINNING AT A POINT 279.72 FEET EAST OF A STONE MONUMENT WHICH IS THE NORTHWEST CORNER OF THE SOUTHWEST QUARTER OF THE NORTHWEST QUARTER OF SECTION 34, TOWNSHIP 24, RANGE 6 EAST, W.M., IN KING COUNTY, WASHINGTON;
THENCE SOUTH FOR 598.02 FEET;
THENCE EAST 364.20 FEET;
THENCE NORTH 598.02 FEET;
THENCE 364.20 FEET WEST TO THE PLACE OF BEGINNING;

TOGETHER WITH THE EAST 25 FEET OF THE FOLLOWING DESCRIBED TRACT OF LAND, THAT PORTION OF THE SOUTHWEST QUARTER OF THE NORTHWEST QUARTER OF SECTION 34, TOWNSHIP 24 NORTH, RANGE 6 EAST, W.M., IN KING COUNTY, WASHINGTON DESCRIBED AS FOLLOWS:

BEGINNING AT A POINT WHICH MEASURED ALONG THE SECTION AND SUBDIVISION LINES IS 3375.60 FEET NORTH AND 279.72 FEET EAST OF THE SOUTHWEST CORNER OF THE SAID SECTION 34, SAID POINT BEING IDENTICAL WITH THE NORTHWEST CORNER OF A TRACT OF LAND HERETOFORE DEEDED TO AUGUST JARVENEN BY DEED DATED JULY 28, 1921;
THENCE NORTHERLY AND PARALLEL TO THE WEST LINE OF SAID SECTION 34, A DISTANCE OF 598.02 FEET TO THE NORTH LINE OF SAID SOUTHWEST QUARTER OF THE NORTHWEST QUARTER;
THENCE WESTERLY ALONG THE SAID NORTH LINE OF THE SOUTHWEST QUARTER OF THE NORTHWEST QUARTER TO AN INTERSECTION WITH THE EAST LINE OF THE ISSAQUAH HOBART ROAD NO. 1349;
THENCE IN A SOUTHERLY DIRECTION, ALONG SAID EASTERLY MARGIN OF SAID ROAD, A DISTANCE OF 625.0 FEET, MORE OR LESS TO AN INTERSECTION WITH THE PRODUCED NORTH LINE OF THE SAID TRACT CONVEYED TO AUGUST JARVENEN;
THENCE EASTERLY ALONG SOUTHERLY PRODUCED LINE, A DISTANCE OF 132 FEET, MORE OR LESS TO THE POINT OF BEGINNING;

AND TOGETHER WITH THAT PORTION OF THE NORTHWEST QUARTER OF THE NORTHWEST QUARTER OF SECTION 34, TOWNSHIP 24 NORTH, RANGE 6 EAST, W.M., IN KING COUNTY, WASHINGTON LYING SOUTH OF THE MOST WESTERLY 40 FEET OF THE NORTH 50 FEET OF LOT 1, BLOCK 4, TOWN OF ENGLEWOOD ACCORDING TO THE PLAT THEREOF RECORDED IN VOLUME 2 OF PLATS, PAGE 134, IN KING COUNTY, WASHINGTON;

PARCEL F: (3424069104)

THAT PORTION OF THE NORTHWEST QUARTER OF SECTION 34, TOWNSHIP 24, RANGE 6 EAST, W.M., IN KING COUNTY, WASHINGTON DESCRIBED AS FOLLOWS:

BEGINNING 3375.60 FEET NORTH AND 643.92 FEET EAST OF THE SOUTHWEST CORNER OF SAID SECTION;
THENCE NORTH 598.02 FEET, MORE OR LESS, TO THE NORTH LINE OF THE SOUTHWEST QUARTER OF THE NORTHWEST QUARTER;
THENCE EAST 108 FEET, MORE OR LESS, TO THE WEST LINE OF THE NORTHERN PACIFIC RAILROAD RIGHT OF WAY;
THENCE SOUTHEASTERLY ALONG SAID RIGHT OF WAY LINE 626.5 FEET;
THENCE WEST 294 FEET, MORE OR LESS, TO THE POINT OF BEGINNING.

PARCEL G: (3424069140)

THAT PORTION OF THE NORTHWEST QUARTER OF SECTION 34, TOWNSHIP 24 NORTH, RANGE 6 EAST, W.M., IN KING COUNTY, WASHINGTON DESCRIBED AS FOLLOWS:

BEGINNING 3375.60 FEET NORTH AND 643.92 FEET EAST OF THE SOUTHWEST CORNER OF SAID SECTION;
THENCE SOUTH 100 FEET;
THENCE EAST 364.2 FEET;
THENCE NORTH 100 FEET;
THENCE WEST 364.2 FEET TO POINT OF BEGINNING.

CALL 2 BUSINESS DAYS BEFORE YOU DIG 811 OR 1-800-424-5555

THESE DRAWINGS ARE NOT TO BE USED FOR CONSTRUCTION UNLESS SIGNED BY THE REVIEWING AGENCY

HORIZONTAL CONTROL

BASIS OF BEARING: NAD 83/91

VERTICAL DATUM AND BENCHMARK

VERTICAL DATUM: NAVD 88 PER G4 GPS

SURVEY LEGEND

- SUBDIV. CORNER/FOUND
- SUBDIV. CORNER/NOT FOUND
- FOUND CAPPED REBAR
- SET CAPPED REBAR LS 30450
- SET LINE STAKE
- FOUND CONC. MON. IN CASE
- FOUND SURFACE MON.
- WETLAND
- WATER METER
- FIRE HYDRANT
- WATER VALVE
- GAS VALVE
- POWER VAULT
- UTILITY POLE
- UTILITY ANCHOR
- TELEPHONE RISER
- YARD LIGHT
- BLOW OFF
- MAIL BOX
- JUNCTION BOX
- STREET SIGN
- STREET LIGHT
- –OHP– OVERHEAD POWER
- –SD– STORM LINE
- –SS– SEWER LINE
- –W– WATER LINE
- –G– GAS LINE

PROPOSED LEGEND

- CATCH BASIN (TYPE 1)
- AREA DRAIN
- CATCH BASIN WITH GRATE (TYPE 2)
- STORM DRAIN MANHOLE WITH SOLID LID (TYPE 2)
- STORM CLEANOUT
- CULVERT
- SWALE
- FOOTING DRAIN
- SANITARY SEWER MANHOLE (TYPE 1)
- SANITARY SEWER CLEANOUT
- FIRE HYDRANT
- FIRE DEPARTMENT CONNECTION
- POST INDICATOR VALVE (PIV)
- WATER GATE VALVE
- WATER REDUCER
- WATER COUPLING SLEEVE
- WATER THRUST BLOCK
- WATER TEE
- WATER BEND
- WATER METER
- PIPE CAP
- WATER BLOWOFF ASSEMBLY
- WATER AIR VACUUM ASSEMBLY
- CONCRETE RETAINING WALL
- RETAINING WALL (ROCKERY, KEYSTONE, REDI-ROCK)
- PROPERTY LINE
- AD AREA DRAIN
- H.P. HIGH POINT
- L.P. LOW POINT
- G.B. GRADE BREAK
- STORM DRAIN PIPE
- PERF. PIPE
- FIELD UNDERDRAIN
- SANITARY SEWER PIPE
- WATERMAIN
- STANDARD DUTY ASPHALT PAVEMENT
- HEAVY DUTY ASPHALT PAVEMENT
- CONCRETE PAVEMENT

OWNER

ISSAQUAH SCHOOL DISTRICT #411
565 NW HOLLY STREET
ISSAQUAH, WA 98027
PHONE: (425) 837-7040
CONTACT: ROYCE NOURIGAT

ARCHITECT

CORNERSTONE ARCHITECTURAL GROUP
6161 NE 175TH STREET, SUITE 101
KENMORE, WA 98028
PHONE: (206) 682-5000
CONTACT: STEVE BARNES

CIVIL ENGINEER

INTEGRITY WORKS CONSULTING ENGINEERS, LLC
170 W. DAYTON ST., SUITE 204
EDMONDS, WA 98020
PHONE: (206) 920-9410
CONTACT: JOE MOON, P.E.

LANDSCAPE ARCHITECT

TERRAFORMA DESIGN GROUP, INC.
5027 51ST AVE. SW
SEATTLE, WA 98136
PHONE: (206) 923-0590
CONTACT: AKEMI SAKAIDA

SURVEYOR

GROUP FOUR INC.
1911 VERNON RD., STE. A
LAKE STEVENS, WA 98258
PHONE: (425) 408-1152
CONTACT: DAN ROUPE, PLS

GEOTECHNICAL ENGINEER

ASSOCIATED EARTH SCIENCES INC.
911 5TH AVE.
KIRKLAND, WA 98033
PHONE: (425) 827-7701
CONTACT: KURT MERRIMAN, PE

UTILITY PURVEYORS

WATER AND SEWER: CITY OF ISSAQUAH
PUBLIC WORKS
1775 12TH AVE. N.W.
ISSAQUAH, WA. 98027
PHONE (425) 837-3400

POWER AND GAS: PUGET SOUND ENERGY
10885 NE 4TH STREET
BELLEVUE, WA 98004
PHONE (888) 321-7779

COMM: CENTURYLINK
10200 NE 10TH STREET
BELLEVUE, WA 98004
PHONE (425) 452-0010

"UNDERGROUND UTILITIES ARE SHOWN IN APPROXIMATE LOCATION. THERE IS NO GUARANTEE THAT ALL UTILITY LINES ARE SHOWN, OR THAT THE LOCATION, SIZE, AND MATERIAL IS ACCURATE. THE CONTRACTOR SHALL UNCOVER ALL INDICATED PIPING WHERE CROSSING, INTERFERENCES, OR CONNECTIONS OCCUR PRIOR TO TRENCHING OR EXCAVATION FOR ANY PIPE OF STRUCTURES, TO DETERMINE ACTUAL LOCATIONS, SIZE, AND MATERIAL. THE CONTRACTOR SHALL MAKE THE APPROPRIATE PROVISION FOR PROTECTION OF SAID FACILITIES. THE CONTRACTOR SHALL NOTIFY **ONE CALL** AT 811 OR 1-800-424-5555 AND ARRANGE FOR FIELD LOCATION OF EXISTING FACILITIES BEFORE CONSTRUCTION"

SITE INFORMATION

1. SITE ADDRESS:
   CLARK ELEMENTARY SCHOOL
   400 1ST AVENUE SE
   ISSAQUAH, WA 98027
2. TAX PARCEL NUMBERS: 2354300290, 2354300285, 2354300270, 2354300315, 3424069028, 3424069104, 3424069140.
3. SITE AREA: 11.16 ACRES
4. ZONING: CF-F

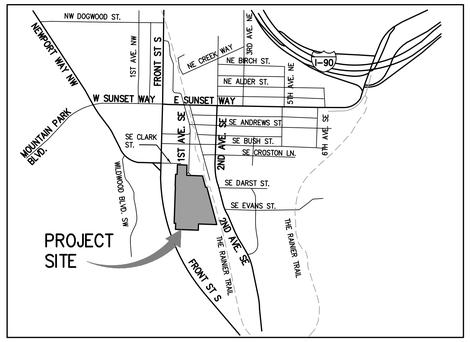

VICINITY MAP
SCALE: 1" = 1000'

DRAWING INDEX	
SHEET NO.	TITLE
C1.00	COVER SHEET
C1.01	GENERAL NOTES
C2.00	EXISTING CONDITIONS SURVEY
C2.01	EXISTING CONDITIONS SURVEY
C3.00	T.E.S.C. PLAN
C3.01	T.E.S.C. DETAILS
C3.02	T.E.S.C. DETAILS
C4.00	DEMOLITION OVERVIEW PLAN
C4.01	DEMOLITION PLAN
C4.02	DEMOLITION PLAN
C4.03	DEMOLITION NOTES
C4.04	DEMOLITION DETAILS
C5.00	GRADING OVERVIEW PLAN
C5.01	GRADING PLAN
C5.02	GRADING PLAN
C5.03	EAST DRIVEWAY PROFILE
C5.04	GRADING DETAILS
C6.00	STORM DRAINAGE OVERVIEW PLAN
C6.01	STORM DRAINAGE PLAN
C6.02	STORM DRAINAGE PLAN
C6.03	STORM DRAINAGE DETAILS
C6.04	STORM DRAINAGE DETAILS
C6.05	STORM DRAINAGE DETAILS
C6.06	STORM DRAINAGE DETAILS
C6.07	STORM DRAINAGE DETAILS
C6.08	STORM DRAINAGE DETAILS
C6.09	STORM DRAINAGE DETAILS
C7.00	WATER OVERVIEW PLAN
C7.01	WATER PLAN
C7.02	WATER PLAN
C7.03	WATER PROFILE
C7.04	WATER PROFILE
C7.05	WATER DETAILS
C7.06	WATER DETAILS
C8.00	SANITARY SEWER OVERVIEW PLAN
C8.01	SANITARY SEWER PLAN
C8.02	SANITARY SEWER PLAN
C8.03	SANITARY SEWER PROFILE
C8.04	SANITARY SEWER DETAILS
C8.05	SANITARY SEWER DETAILS
C9.00	HORIZONTAL CONTROL AND PAVING OVERVIEW PLAN
C9.01	HORIZONTAL CONTROL AND PAVING PLAN
C9.02	HORIZONTAL CONTROL AND PAVING PLAN
C9.03	PAVING DETAILS
C9.04	PAVING DETAILS
C9.05	PAVING DETAILS
C9.06	PAVING DETAILS

Integrity Works
Consulting Engineers, LLC
170 W. Dayton St. Suite 204 Edmonds WA 98020
O: 425.967.7913 C: 206.920.9410

Cornerstone
ARCHITECTURAL GROUP
Phone: 206.682.5000
cornerstonearch.com
6161 NE 175th Street, Suite 101
Kenmore, Washington 98028

© Cornerstone Architectural Group

JOSEPH B. MOON
STATE OF WASHINGTON
38972
PROFESSIONAL ENGINEER
04/04/16

CLARK ELEMENTARY SCHOOL
ISSAQUAH SCHOOL DISTRICT
400 1st AVE. SE
ISSAQUAH, WASHINGTON 98027

PERMIT SET
SHEET TITLE: COVER SHEET
DATE: 04-04-16
PROJECT NO: 191406
REVISIONS:

C1.00

SW1/4, NW1/4, SEC. 34, TWP. 24N, RGE 6E., W.M.

GENERAL NOTES

1. ALL DESIGN AND CONSTRUCTION SHALL BE IN ACCORDANCE WITH THE PERMIT CONDITIONS, THE CITY OF ISSAQUAH ENGINEERING STANDARDS, AND THE WASHINGTON STATE DOT (WSDOT) STANDARD SPECIFICATIONS. IT SHALL BE THE SOLE RESPONSIBILITY OF THE APPLICANT AND THE PROFESSIONAL CIVIL ENGINEER TO CORRECT ANY ERROR, OMISSION, OR VARIATION FROM THE ABOVE REQUIREMENTS FOUND IN THESE PLANS. ALL CORRECTIONS SHALL BE AT NO ADDITIONAL COST OR LIABILITY TO THE CITY OF ISSAQUAH.
2. THE DESIGN ELEMENTS WITHIN THESE PLANS HAVE BEEN REVIEWED ACCORDING TO THE CITY OF ISSAQUAH'S ENGINEERING REVIEW CHECKLIST. ANY VARIANCE FROM ADOPTED STANDARDS IS NOT ALLOWED UNLESS SPECIFICALLY APPROVED BY THE CITY OF ISSAQUAH PRIOR TO CONSTRUCTION.
3. APPROVAL OF THESE PLANS DO NOT CONSTITUTE AN APPROVAL OF ANY OTHER CONSTRUCTION (E.G. DOMESTIC WATER CONVEYANCE, SEWER CONVEYANCE, GAS, ELECTRICAL, ETC.)
4. BEFORE ANY CONSTRUCTION OR DEVELOPMENT ACTIVITY, A PRECONSTRUCTION MEETING MUST BE HELD BETWEEN THE THE CITY OF ISSAQUAH, THE APPLICANT, AND THE APPLICANT'S CONSTRUCTION REPRESENTATIVE.
5. A COPY OF THESE APPROVED PLANS MUST BE ON THE JOB SITE WHENEVER CONSTRUCTION IS IN PROGRESS.
6. GRADING ACTIVITIES (SITE ALTERATION) ARE LIMITED TO THE HOURS OF 7 A.M. TO 7 P.M. MONDAY THROUGH SATURDAY AND 10 A.M. TO 5 P.M. ON SUNDAY, UNLESS OTHERWISE APPROVED WITH A WRITTEN DECISION BY THE REVIEWING AGENCY.
7. IT SHALL BE THE APPLICANT'S/CONTRACTOR'S RESPONSIBILITY TO OBTAIN ALL CONSTRUCTION EASEMENTS NECESSARY BEFORE INITIATING OFF-SITE WORK. EASEMENTS REQUIRE REVIEW AND APPROVAL PRIOR TO CONSTRUCTION.
8. FRANCHISED UTILITIES OR OTHER INSTALLATIONS THAT ARE NOT SHOWN ON THESE APPROVED PLANS SHALL NOT BE CONSTRUCTED UNLESS AN APPROVED SET OF PLANS THAT MEET ALL REQUIREMENTS OF THE CITY OF ISSAQUAH ARE SUBMITTED THREE DAYS PRIOR TO CONSTRUCTION.
9. DATUM SHALL BE NAVD 1988 UNLESS OTHERWISE APPROVED BY THE CITY OF ISSAQUAH.
10. ALL UTILITY TRENCHES AND ROADWAY SUBGRADE SHALL BE BACKFILLED AND COMPACTED TO 95 PERCENT DENSITY, STANDARD PROCTOR.
11. OPEN CUTTING OF EXISTING ROADWAYS FOR NON-FRANCHISED UTILITY OR STORM WORK IS NOT ALLOWED UNLESS SPECIFICALLY APPROVED BY THE CITY OF ISSAQUAH AND NOTED ON THESE APPROVED PLANS. ANY OPEN CUT SHALL BE RESTORED IN ACCORDANCE WITH THE CITY OF ISSAQUAH.
12. THE CONTRACTOR SHALL BE RESPONSIBLE FOR PROVIDING ADEQUATE SAFEGUARDS, SAFETY DEVICES, PROTECTIVE EQUIPMENT, FLAGGERS, AND ANY OTHER NEEDED ACTIONS TO PROTECT THE LIFE, HEALTH, AND SAFETY OF THE PUBLIC, AND TO PROTECT PROPERTY IN CONNECTION WITH THE PERFORMANCE OF WORK COVERED BY THE CONTRACTOR. ANY WORK WITHIN THE TRAVELED RIGHT-OF-WAY THAT MAY INTERRUPT NORMAL TRAFFIC FLOW SHALL REQUIRE AT LEAST ONE FLAGGER FOR EACH LANE OF TRAFFIC AFFECTED. MANUAL ON UNIFORM TRAFFIC CONTROL DEVICES (MUTCD) SHALL APPLY. WORK IN RIGHT-OF-WAY IS NOT AUTHORIZED UNTIL A TRAFFIC CONTROL PLAN IS APPROVED BY THE CITY OF ISSAQUAH.
13. ALL CONSTRUCTION IS SUBJECT TO INSPECTION BY THE CITY OF ISSAQUAH AND THE CONTRACTOR SHALL NOTIFY THE CITY OF THEIR CONSTRUCTION SCHEDULE IN SUFFICIENT TIME TO ALLOW INSPECTION PRIOR TO AND DURING WORK. CALL THE CITY OF ISSAQUAH FOR INSPECTION REQUESTS.
14. CONFLICTS SHALL BE BROUGHT TO THE ATTENTION OF THE ENGINEER AND PERMITTING AGENCY AND SHALL BE RESOLVED PRIOR TO PROCEEDING WITH CONSTRUCTION.
15. CONSTRUCTION NOISE SHALL BE LIMITED IN ACCORDANCE WITH THE CITY OF ISSAQUAH MUNICIPAL CODE.
16. THE CITY OF ISSAQUAH, OWNER, AND OTHER GOVERNING AGENCY SHALL BE PROVIDED "AS-BUILT" PLANS AT THE COMPLETION OF CONSTRUCTION STAMPED AND SIGNED BY A LICENSED SURVEYOR AND/OR THE DESIGN ENGINEER, VERIFYING THE CONSTRUCTION PROVIDED BY THE CONTRACTOR.
17. THE LOCATION OF UTILITIES IS APPROXIMATE. THE CONTRACTOR SHALL BE RESPONSIBLE FOR VERIFYING THE LOCATION OF EXISTING UTILITIES PRIOR TO CONSTRUCTION. UTILITIES SHOWN HERE ARE FOR THE PURPOSE OF ASSISTING THE CONTRACTOR IN LOCATING SAID UTILITIES. THE CONTRACTOR SHALL CONTACT THE UNDERGROUND UTILITIES LOCATION CENTER (1-800-424-5555) 48 HOURS MIN. PRIOR TO THE BEGINNING OF CONSTRUCTION AND OBTAIN ON-SITE UTILITIES LOCATIONS. CONFLICTS SHALL BE BROUGHT TO THE ATTENTION OF THE ENGINEER AND SHALL BE RESOLVED PRIOR TO PROCEEDING WITH CONSTRUCTION.
18. THE CONTRACTOR SHALL BE RESPONSIBLE FOR OBTAINING ALL APPLICABLE PERMITS AND EASEMENTS AS REQUIRED BY THE CITY OF ISSAQUAH.
19. APPROVAL MUST BE OBTAINED FROM THE CITY OF ISSAQUAH BEFORE ANY STRUCTURES, FILL OR OBSTRUCTIONS, INCLUDING FENCES, ARE LOCATED WITHIN ANY DRAINAGE EASEMENT, FLOOD PLAIN, NATIVE GROWTH PROTECTION EASEMENT OR WETLAND.
20. WHERE CONSTRUCTION IS CARRIED OUT IN AREAS NOT SPECIFIED ON THE PLANS AND WHICH HAVE EXISTING IMPROVEMENTS, APPROPRIATE MEASURES SHALL BE TAKEN TO RESTORE SUCH AREAS TO CONDITIONS EXISTING PRIOR TO CONSTRUCTION OR AS REQUIRED BY THE CITY OF ISSAQUAH OR OWNER.
21. CONTRACTOR SHALL PROVIDE AND INSTALL ALL REGULATORY AND WARNING SIGNS PER THE LATEST EDITION OF MANUAL ON UNIFORM TRAFFIC CONTROL DEVICES.

GENERAL STORM DRAINAGE NOTES

1. A PRE-CONSTRUCTION CONFERENCE SHALL BE HELD WITH THE CITY OF ISSAQUAH PRIOR TO THE START OF CONSTRUCTION. THE APPLICANT/CONTRACTOR SHALL BE RESPONSIBLE FOR SECURING ALL NECESSARY PERMITS PRIOR TO CONSTRUCTION.
2. BEFORE ANY CONSTRUCTION MAY OCCUR, THE CONTRACTOR SHALL HAVE PLANS WHICH HAVE BEEN SIGNED AND APPROVED BY THE CITY OF ISSAQUAH PUBLIC WORKS DEPARTMENT, OBTAINED ALL CITY, COUNTY, STATE, FEDERAL AND OTHER REQUIRED PERMITS, AND HAVE POSTED ALL REQUIRED BONDS.
3. ALL STORM DRAINAGE IMPROVEMENTS SHALL BE CONSTRUCTED IN ACCORDANCE WITH THE LATEST EDITION OF THE KING COUNTY SURFACE WATER DESIGN MANUAL, CITY OF ISSAQUAH PUBLIC WORKS STANDARDS, KING COUNTY ROAD STANDARDS, AND THE STANDARD SPECIFICATIONS FOR ROAD, BRIDGE AND MUNICIPAL CONSTRUCTION, PREPARED BY WSDOT AND THE AMERICAN PUBLIC WORKS ASSOCIATION (APWA).
4. ANY DEVIATION FROM THE APPROVED PLANS WILL REQUIRE WRITTEN APPROVAL. ALL CHANGES SHALL BE SUBMITTED TO THE CITY.
5. A COPY OF THE APPROVED STORM WATER PLANS MUST BE ON THE JOB SITE WHENEVER CONSTRUCTION IS IN PROGRESS.
6. ALL DISTURBED AREAS SHALL BE SEEDED AND MULCHED OR SIMILARLY STABILIZED TO THE SATISFACTION OF THE CITY OF ISSAQUAH DEPARTMENT OF PUBLIC WORKS FOR THE PREVENTION OF ON-SITE EROSION AFTER THE COMPLETION OF CONSTRUCTION.
7. MINIMUM COVER OVER STORM DRAINAGE PIPES AND FACILITIES SHALL BE 2 FEET, UNLESS OTHERWISE SHOWN AND APPROVED.
8. CATCH BASINS WITH A DEPTH OF OVER FIVE FEET (5') TO THE PIPE INVERT SHALL BE A TYPE II CATCH BASIN. TYPE II CATCH BASINS EXCEEDING FIVE FEET (5') IN DEPTH SHALL HAVE A STANDARD LADDER INSTALLED. ALL STORM DRAINAGE MAIN EXTENSIONS WITHIN THE PUBLIC RIGHT-OF-WAY OR IN EASEMENTS MUST BE STAKED FOR LINE AND GRADE PRIOR TO STARTING CONSTRUCTION. ALL TYPE 1 AND 2 STRUCTURES SHALL BE PROVIDED WITH LOCKING BOLTS.
9. ROCK FOR EROSION PROTECTION OF ROADWAY DITCHES, WHERE REQUIRED, MUST BE OF SOUND QUARRY ROCK, PLACED TO A DEPTH OF ONE FOOT (1') AND MUST MEET THE FOLLOWING SPECIFICATIONS: 4"-8" ROCK/40%-70% PASSING; 2"-4" ROCK/30%-40% PASSING; 2"-MINUS ROCK/10%-20% PASSING.
10. CONSTRUCTION OF DEWATERING (GROUNDWATER) SYSTEMS SHALL BE IN ACCORDANCE WITH THE APWA STANDARD SPECIFICATIONS.
11. ALL TRENCH BACKFILL SHALL BE COMPACTED TO 95 PERCENT DENSITY (MODIFIED PROCTOR ASTM-D1557) IN ROADWAYS, ROADWAY SHOULDERS, ROADWAY PRISM AND DRIVEWAYS, AND 85 PERCENT DENSITY (MODIFIED PROCTOR ASTM-D1557) IN UNPAVED AREAS. ALL PIPE ZONE COMPACTION SHALL BE 95 PERCENT (MODIFIED PROCTOR ASTM-D1557).
12. THE CONTRACTOR SHALL BE RESPONSIBLE FOR PROVIDING ADEQUATE SAFEGUARDS, SAFETY DEVICES, PROTECTIVE EQUIPMENT, CONFINED SPACE PROTECTION, FLAGGERS, AND ANY OTHER NEEDED ACTIONS TO PROTECT THE LIFE, HEALTH, AND SAFETY OF THE PUBLIC, AND TO PROTECT PROPERTY IN CONNECTION WITH THE PERFORMANCE OF WORK COVERED BY THE CONTRACT. ANY WORK WITHIN THE TRAVELED RIGHT-OF-WAY THAT MAY INTERRUPT NORMAL TRAFFIC FLOW SHALL REQUIRE A TRAFFIC CONTROL PLAN APPROVED BY THE CITY OF ISSAQUAH. ALL SECTIONS OF THE WSDOT STANDARD SPECIFICATIONS, TRAFFIC CONTROL, AND THE MANUAL OF UNIFORM TRAFFIC CONTROL DEVICES (MUTCD) SHALL APPLY.
13. NO FINAL CUT OR FILL SLOPE SHALL EXCEED SLOPES OF TWO (2) HORIZONTAL TO ONE (1) VERTICAL WITHOUT STABILIZATION BY ROCKERY OR BY A STRUCTURAL RETAINING WALL, UNLESS DESIGNED AND UNDER THE SUPERVISION OF A LICENSED GEOTECHNICAL ENGINEER.
14. ALL MANHOLE LADDERS SHALL BE FIRMLY ATTACHED AND EXTEND TO WITHIN 16' OF THE BOTTOM OF THE STRUCTURE.
15. APPROXIMATE LOCATIONS OF EXISTING UTILITIES HAVE BEEN OBTAINED FROM AVAILABLE RECORDS AND ARE SHOWN FOR CONVENIENCE. THE CONTRACTOR SHALL BE RESPONSIBLE FOR VERIFICATION OF EXISTING UTILITY LOCATIONS WHETHER OR NOT THESE UTILITIES ARE SHOWN ON THE PLANS. THE CONTRACTOR SHALL EXERCISE ALL CARE TO AVOID DAMAGE TO ANY UTILITY. IF CONFLICTS WITH EXISTING UTILITIES ARISE DURING CONSTRUCTION, THE CONTRACTOR SHALL NOTIFY THE CITY CONSTRUCTION INSPECTOR/CIVIL ENGINEER AND ANY CHANGES REQUIRED SHALL BE APPROVED BY THE CITY OF ISSAQUAH PUBLIC WORKS DEPARTMENT AND CIVIL ENGINEER PRIOR TO COMMENCEMENT OF RELATED CONSTRUCTION ON THE PROJECT.
16. THE UNDERGROUND UTILITY LOCATION SERVICE SHALL BE CONTACTED FOR FIELD LOCATION OF EXISTING UTILITIES PRIOR TO ANY CONSTRUCTION. THE OWNER OR HIS REPRESENTATIVE SHALL BE CONTACTED IF A UTILITY CONFLICT EXISTS. FOR UTILITY LOCATION IN KING COUNTY, CALL 1-800-424-5555. THE CONTRACTOR IS RESPONSIBLE TO ENSURE THAT UTILITY LOCATES ARE MAINTAINED THROUGHOUT THE LIFE OF THE PROJECT.
17. THE CONTRACTOR SHALL VERIFY THE LOCATIONS, WIDTHS, THICKNESSES, AND ELEVATIONS OF ALL EXISTING PAVEMENTS AND STRUCTURES THAT ARE TO INTERFACE WITH NEW WORK. PROVIDE ALL TRIMMING, CUTTING, SAW CUTTING, GRADING, LEVELING, SLOPING, COATING, AND OTHER WORK, INCLUDING MATERIALS AS NECESSARY, TO CAUSE THE INTERFACE WITH EXISTING WORKS TO BE PROPER, ACCEPTABLE TO THE ENGINEER AND THE CITY OF ISSAQUAH, COMPLETE IN PLACE AND READY TO USE.
18. ALL INLET, MANHOLE, AND CATCH BASIN FRAMES AND GRATES SHALL NOT BE ADJUSTED TO GRADE UNTIL IMMEDIATELY PRIOR TO FINAL PAVING. ALL CATCH BASIN GRATES SHALL BE SET 0.10' BELOW PAVEMENT LEVEL.
19. ALL CATCH BASIN GRATES WITHIN THE CITY'S RIGHT-OF-WAY SHALL BE VANED GRATES OR SOLID LID COVERS. HERRINGBONE GRATES ARE ONLY ALLOWED ONSITE.
20. OPEN CUT ROAD CROSSINGS FOR UTILITY TRENCHES ON EXISTING TRAVELED ROADWAY SHALL BE BACKFILLED ONLY WITH 5/8" MINUS CRUSHED ROCK AND MECHANICALLY COMPACTED (UNLESS OTHERWISE APPROVED BY THE CITY). CUTS INTO THE EXISTING ASPHALT SHALL BE NEAT SAWCUT IN A CONTINUOUS LINE. A TEMPORARY COLD MIX PATCH MUST BE PLACED IMMEDIATELY AFTER BACKFILL AND COMPACTION. A PERMANENT HOT MIX PATCH SHALL BE PLACED WITHIN 30 DAYS AND SHALL BE A MINIMUM OF 1" THICKER THAN THE ORIGINAL ASPHALT WITH A MINIMUM THICKNESS OF 2".
21. ALL DAMAGES INCURRED TO PUBLIC AND/OR PRIVATE PROPERTY BY THE CONTRACTOR DURING THE COURSE OF CONSTRUCTION SHALL BE PROMPTLY REPAIRED TO THE SATISFACTION OF THE CITY CONSTRUCTION INSPECTOR BEFORE PROJECT APPROVAL AND/OR THE RELEASE OF THE PROJECT'S PERFORMANCE BOND.
22. ALL STORMWATER PIPE LOCATED IN THE PUBLIC RIGHT-OF-WAY OR IDENTIFIED TO BE MAINTAINED BY THE CITY IN A PUBLIC EASEMENT SHALL BE RECORDED UNDER CLOSED CIRCUIT TELEVISION (CCTV). AN ELECTRONIC COPY SHALL BE SUBMITTED TO THE PUBLIC WORKS DEPARTMENT FOR REVIEW AND APPROVAL.
23. PRIOR TO FINAL APPROVAL, ALL PUBLIC AND PRIVATE STORMWATER FACILITIES SHALL BE CONSTRUCTED AND IN FULL OPERATION. THESE FACILITIES SHALL INCLUDE THE STORMWATER CONVEYANCE SYSTEM, DETENTION, WATER QUALITY, AND ANY REQUIRED MONITORING FACILITIES. THE CONVEYANCE SYSTEM SHALL INCLUDE ALL DRAINAGE STRUCTURES, PIPING, DITCHING, CURB, GUTTER, AND ROAD PAVING WITH THE EXCEPTION OF THE FINAL LIFT OF ASPHALT.
24. ALL STORMWATER FACILITIES SHALL BE DRAINED, JETTED, AND CLEANED PRIOR TO FINAL ACCEPTANCE. AT A MINIMUM, ALL STORMFILTERS SHALL BE REPLACED PRIOR TO FINAL ACCEPTANCE TO INSURE PROPER FUNCTION.
25. PROOF OF LIABILITY INSURANCE SHALL BE SUBMITTED TO THE CITY OF ISSAQUAH PRIOR TO THE CONSTRUCTION OF THE DRAINAGE FACILITIES, PREFERABLY AT THE PRECONSTRUCTION MEETING.
26. ALL PIPE AND APPURTENANCES SHALL BE LAID ON A PROPERLY PREPARED FOUNDATION IN ACCORDANCE WITH WSDOT SPECIFICATIONS. THIS SHALL INCLUDE LEVELING AND COMPACTING THE TRENCH BOTTOM, THE TOP OF THE FOUNDATION MATERIAL, AND ANY REQUIRED PIPE BEDDING, TO A UNIFORM GRADE SO THAT THE ENTIRE PIPE IS SUPPORTED BY A UNIFORMLY DENSE UNYIELDING BASE.
27. STEEL PIPE SHALL BE ALUMINIZED, OR GALVANIZED WITH ASPHALT TREATMENT #1 OR BETTER INSIDE AND OUTSIDE.
28. ALL DRAINAGE STRUCTURES, SUCH AS CATCH BASINS AND MANHOLES, NOT LOCATED WITHIN A TRAVELED ROADWAY OR SIDEWALK, SHALL HAVE SOLID LOCKING LIDS. ALL DRAINAGE STRUCTURES ASSOCIATED WITH A PERMANENT RETENTION/DETENTION FACILITY SHALL HAVE SOLID LOCKING LIDS.
29. ALL CATCH BASIN GRATES SHALL CONFORM TO THE CITY OF ISSAQUAH'S ENGINEERING STANDARDS, WHICH INCLUDES THE STAMPING "OUTFALL TO STREAM, DUMP NO POLLUTANTS".
30. ALL DRIVEWAY CULVERTS LOCATED WITHIN THE CITY OF ISSAQUAH RIGHT-OF-WAY SHALL BE OF SUFFICIENT LENGTH TO PROVIDE A MINIMUM 3:1 SLOPE FROM THE EDGE OF THE DRIVEWAY TO THE BOTTOM OF THE DITCH. CULVERTS SHALL HAVE BEVELED END SECTIONS TO MATCH THE SIDE SLOPE.
31. ALL DISTURBED PERVIOUS AREAS (COMPACTED, GRADED, LANDSCAPED, ETC.) OF THE DEVELOPMENT SITE MUST DEMONSTRATE ONE OF THE FOLLOWING: THE EXISTING DUFF LAYER SHALL BE STAGED AND REDISTRIBUTED TO MAINTAIN THE MOISTURE CAPACITY OF THE SOIL, OR; AMENDED SOIL SHALL BE ADDED TO MAINTAIN THE MOISTURE CAPACITY.
32. SEASONAL CLEARING IS LIMITED BETWEEN OCTOBER 1 AND MARCH 30 INCLUSIVE, UNLESS OTHERWISE APPROVED WITH A WRITTEN DECISION BY THE REVIEWING AGENCY.
33. IMPROVEMENTS AND/OR BUILDINGS SHALL NOT BE INSTALLED UNTIL DRAINAGE FACILITIES ARE 'IN OPERATION'.
34. ALL PIPES WITHIN PUBLIC RIGHT-OF-WAY AND ONSITE SHALL MEET CURRENT WSDOT/APWA STANDARDS AND SPECIFICATIONS AND/OR AS APPROVED BY THE CITY OF ISSAQUAH AND SHALL BE INSTALLED PER WSDOT SECTION 7-08.
35. BACKFILL SHALL BE PLACED EQUALLY ON BOTH SIDES OF THE PIPE IN LAYERS WITH A LOOSE AVERAGE DEPTH OF 6", COMPACTED TO A DENSITY OF 95% REFER TO WSDOT STD. SPEC. 7-08.3(3) AND STD. SPEC. 2-03.3(14)C, METHOD B & C.
36. WHERE SHOWN ON THE PLANS OR WHERE DIRECTED BY THE ENGINEER, THE EXISTING MANHOLES, CATCH BASINS, OR INLETS SHALL BE ADJUSTED TO THE GRADE AS STAKED. ALL PIPE AND STRUCTURES SHALL BE STAKED FOR SURVEY LINE AND GRADE PRIOR TO THE START OF CONSTRUCTION. ALL CONFLICTS SHALL BE BROUGHT TO THE ATTENTION OF THE ENGINEER PRIOR TO COMMENCING CONSTRUCTION.
37. ALL PIPE MATERIAL SHALL CONFORM TO THE APPROVED PLANS AND/OR CURRENT WSDOT/APWA STANDARDS AND SPECIFICATIONS. ALL SUBSTITUTIONS SHALL BE SUBJECT TO APPROVAL BY THE CITY OF ISSAQUAH PRIOR TO CONSTRUCTION.
38. 12 TO 14 GAUGE TRACER WIRE OR LOCATING TAPE SHALL BE INSTALLED.

CONSTRUCTION SEQUENCE

1. CONTRACTOR SHALL ATTEND PRE-CONSTRUCTION MEETING WITH THE OWNER, ARCHITECT, ENGINEER, CITY OF ISSAQUAH, AND UTILITY PURVEYORS.
2. FLAG OR FENCE CLEARING LIMITS.
3. POST NOTICE OF CONSTRUCTION ACTIVITY SIGN WITH NAME AND PHONE NUMBER OF ESC SUPERVISOR.
4. INSTALL CATCH BASIN PROTECTION.
5. INSTALL PERIMETER PROTECTION (SILT FENCE, ETC.).
6. INSTALL SWPPP MEASURES PER PLAN.
7. PERFORM SITE DEMOLITION PER CONTRACT DOCUMENTS.
8. INSTALL SITE UTILITIES PER CONTRACT DOCUMENTS.
9. CONSTRUCT NEW BUILDING.
10. GRADE SITE TO FINAL SUBGRADE ELEVATIONS.
11. MAINTAIN SWPPP MEASURES IN ACCORDANCE WITH THE CITY OF ISSAQUAH STANDARDS AND MANUFACTURER'S RECOMMENDATIONS.
12. MAINTAIN, RELOCATE, AND INSTALL NEW SWPPP MEASURES AS SITE AND WEATHER CONDITIONS DICTATE.
13. COVER ALL AREAS THAT WILL BE UNWORKED FOR MORE THAN SEVEN DAYS DURING THE DRY SEASON OR TWO DAYS DURING THE WET SEASON WITH STRAW, WOOD FIBER MULCH, COMPOST, PLASTIC SHEETING OR EQUIVALENT.
14. STABILIZE ALL AREAS THAT REACH FINAL GRADE WITHIN SEVEN DAYS.
15. SEED OR SOD ANY AREAS TO REMAIN UNWORKED FOR MORE THAN 30 DAYS.
16. PAVE SITE PER CONTRACT DOCUMENTS.
17. CLEAN STORM DRAINAGE SYSTEM, ON AND OFF SITE, OF ALL SEDIMENT AND DEBRIS. DEBRIS OR SEDIMENT SHALL NOT BE DISCHARGED TO THE EXISTING/PROPOSED WATER QUALITY SYSTEMS AND TO OFF-SITE DRAINAGE FACILITIES.
18. UPON COMPLETION OF THE PROJECT, ALL DISTURBED AREAS MUST BE STABILIZED.
19. REMOVE SWPPP FACILITIES WHEN SITE IS COMPLETELY STABILIZED.

CALL 2 BUSINESS DAYS BEFORE YOU DIG 811 OR 1-800-424-5555

THESE DRAWINGS ARE NOT TO BE USED FOR CONSTRUCTION UNLESS SIGNED BY THE REVIEWING AGENCY

Integrity Works
Consulting Engineers, LLC
170 W. Dayton St. Suite 204 Edmonds WA 98020
O: 425.967.7913 C: 206.920.9410

Cornerstone
ARCHITECTURAL GROUP
6161 NE 175th Street, Suite 101
Kenmore, Washington 98028
Phone: 206.682.5000
cornerstonearch.com

© Cornerstone Architectural Group

JOSEPH B. MOON
STATE OF WASHINGTON
38972
PROFESSIONAL ENGINEER
04/04/16

CLARK ELEMENTARY SCHOOL
ISSAQUAH SCHOOL DISTRICT
400 1st AVE. SE
ISSAQUAH, WASHINGTON 98027

PERMIT SET

SHEET TITLE: GENERAL NOTES

DATE: 04-04-16 PROJECT NO: 191406

REVISIONS:

C1.01

SW1/4, NW1/4 ,SEC. 34 ,TWP. 24 N. ,RGE. 6 E. ,W.M.

N

SCALE: 1"=30'

CONTOUR INTERVAL = 2'

30' 0 30' 60'

BASIS OF BEARINGS: ROS, VOL. 45, PGS. 197–198

DATUM: NAVD88

SITE BENCH: AS SHOWN ON MAP

LEGAL DESCRIPTIONS:

PARCEL A:

BEGINNING AT A POINT 279.72 FEET EAST OF A STONE MONUMENT WHICH IS THE NORTHWEST CORNER OF THE SOUTHWEST QUARTER OF THE NORTHWEST QUARTER OF SECTION 34, TOWNSHIP 24 NORTH, RANGE 6 EAST, WILLAMETTE MERIDIAN, IN KING COUNTY, WASHINGTON;
THENCE SOUTH FOR 598.02 FEET;
THENCE EAST 364.20 FEET;
THENCE NORTH 598.02 FEET;
THENCE 364.20 FEET WEST TO THE POINT OF BEGINNING;

TOGETHER WITH THE EAST 40 FEET OF THE WEST 297 FEET OF THE SOUTH 165 FEET OF THE NORTHWEST QUARTER OF THE NORTHWEST QUARTER OF SECTION 34, TOWNSHIP 24 NORTH, RANGE 6 EAST, WILLAMETTE MERIDIAN, IN KING COUNTY, WASHINGTON, LYING SOUTHERLY AND WESTERLY OF THE PLAT OF THE TOWN OF ENGLEWOOD, ACCORDING TO THE PLAT THEREOF, RECORDED IN VOLUME 2 OF PLATS, PAGE 134, IN KING COUNTY, WASHINGTON;

TOGETHER WITH THE EAST 25 FEET OF THE FOLLOWING DESCRIBED TRACT OF LAND:
THAT PORTION OF THE SOUTHWEST QUARTER OF THE NORTHWEST QUARTER OF SECTION 34, TOWNSHIP 24 NORTH, RANGE 6 EAST, WILLAMETTE MERIDIAN, IN KING COUNTY, WASHINGTON, DESCRIBED AS FOLLOWS:

BEGINNING AT A POINT WHICH MEASURED ALONG THE SECTION AND SUBDIVISION LINES IS 3,375.60 FEET NORTH AND 279.72 FEET EAST OF THE SOUTHWEST CORNER OF THE SAID SECTION 34, SAID POINT BEING IDENTICAL WITH THE NORTHWEST CORNER OF A TRACT OF LAND HERETOFORE DEEDED TO AUGUST JARVENEN BY DEED DATED JULY 24, 1921;
THENCE NORTHERLY AND PARALLEL TO THE WEST LINE OF SAID SECTION 34 A DISTANCE OF 598.02 FEET TO THE NORTH LINE OF SAID SOUTHWEST QUARTER OF THE NORTHWEST QUARTER;
THENCE WESTERLY ALONG THE SAID NORTH LINE OF THE SOUTHWEST QUARTER OF THE NORTHWEST QUARTER TO AN INTERSECTION WITH THE EAST LINE OF THE ISSAQUAH HOBART ROAD NO. 1349;
THENCE IN A SOUTHERLY DIRECTION, ALONG SAID EASTERLY MARGIN OF SAID ROAD, A DISTANCE OF 625.0 FEET MORE OR LESS TO AN INTERSECTION WITH THE PRODUCED NORTH LINE OF THE SAID TRACT CONVEYED TO AUGUST JARVENEN;
THENCE EASTERLY, ALONG SAID PRODUCED LINE, A DISTANCE OF 132 FEET MORE OR LESS TO THE POINT OF BEGINNING.

PARCEL B:

THAT PORTION OF THE SOUTHWEST QUARTER OF THE NORTHWEST QUARTER OF SECTION 34, TOWNSHIP 24 NORTH, RANGE 5 EAST, WILLAMETTE MERIDIAN, IN KING COUNTY, WASHINGTON, DESCRIBED AS FOLLOWS:

BEGINNING AT A POINT WHICH MEASURED ALONG THE SECTION AND SUBDIVISION LINES IS 3,375.50 FEET NORTH AND 643.92 FEET EAST OF THE SOUTHWEST CORNER OF SAID SECTION, AND RUN THENCE NORTH 598.02 FEET, MORE OR LESS, TO THE NORTH LINE OF THE SAID SOUTHWEST QUARTER OF THE NORTHWEST QUARTER;
THENCE EAST 108 FEET MORE OR LESS TO THE WEST LINE OF THE RIGHT OF WAY OF THE NORTH BEND BRANCH OF THE NORTHERN PACIFIC RAILWAY;
THENCE SOUTHEASTERLY ALONG SAID LINE OF RIGHT OF WAY 625.5 FEET;
THENCE WEST 294 FEET MORE OR LESS TO THE POINT OF BEGINNING.

PARCEL C:

THAT PORTION OF THE SOUTHWEST QUARTER OF THE NORTHWEST QUARTER OF SECTION 34, TOWNSHIP 24 NORTH, RANGE 6 EAST, WILLAMETTE MERIDIAN, IN KING COUNTY, WASHINGTON, MORE PARTICULARLY DESCRIBED AS FOLLOWS:

BEGINNING AT THE SOUTHWEST CORNER OF A TRACT OF LAND CONVEYED TO SCHOOL DISTRICT NO. 157, WHICH DEED WAS RECORDED IN VOLUME 870 OF DEEDS PAGE 554, AUDITOR'S FILE NO. 927005 RECORDS OF KING COUNTY, WHICH POINT IS 279.72 FEET EAST AND 598.02 FEET SOUTH OF THE NORTHWEST CORNER OF SAID SOUTHWEST QUARTER OF THE NORTHWEST QUARTER;
THENCE SOUTH 100 FEET;
THENCE EAST 364.2 FEET;
THENCE NORTH 100 FEET TO THE SOUTHEAST CORNER OF SAID TRACT DEEDED TO SCHOOL DISTRICT NO. 157;
THENCE WEST 364.2 FEET TO THE POINT OF BEGINNING;

EXCEPT COUNTY ROAD;

PARCEL D:

LOTS 1, 2 AND 3, BLOCK 4, PLAT OF TOWN OF ENGLEWOOD, ACCORDING TO THE PLAT THEREOF, RECORDED IN VOLUME 2 OF PLATS, PAGE 134, IN KING COUNTY, WASHINGTON;

TOGETHER WITH THOSE PORTIONS OF STREETS AND ALLEY ADJOINING AS VACATED RECORDED UNDER RECORDING NUMBERS 5931325 AND 7111120425 AS WOULD ATTACH BY OPERATION OF LAW;

EXCEPTING THEREFROM ANY PORTION THEREOF AS DEEDED TO THE CITY OF ISSAQUAH UNDER RECORDING NUMBER 9403252743.

PARCEL E:

LOTS 5 AND 6, BLOCK 4, PLAT OF TOWN OF ENGLEWOOD, ACCORDING TO THE PLAT THEREOF, RECORDED IN VOLUME 2 OF PLATS, PAGE 134, IN KING COUNTY, WASHINGTON;

TOGETHER WITH THE NORTH HALF OF ALLEY ADJOINING AS VACATED RECORDED UNDER RECORDING NUMBER 7111120425 AS WOULD ATTACH BY OPERATION OF LAW.

PARCEL F:

LOTS 1, 2, 3, 4 AND 5, BLOCK 5, PLAT OF TOWN OF ENGLEWOOD, ACCORDING TO THE PLAT THEREOF, RECORDED IN VOLUME 2 OF PLATS, PAGE 134, IN KING COUNTY, WASHINGTON;

TOGETHER WITH THOSE PORTIONS OF STREETS AND ALLEY ADJOINING AS VACATED RECORDED UNDER RECORDING NUMBERS 5931325 AND 7111120425 AS WOULD ATTACH BY OPERATION OF LAW;

EXCEPTING THEREFROM ANY PORTION THEREOF AS DEEDED TO THE CITY OF ISSAQUAH UNDER RECORDING NUMBER 9403252743.

PARCEL G:

LOT 4, BLOCK 4, PLAT OF TOWN OF ENGLEWOOD, ACCORDING TO THE PLAT THEREOF, RECORED IN VOLUME 2 OF PLATS, PAGE 134, IN KING COUNTY, WASHINGTON;

TOGETHER WITH THE NORTH HALF OF ALLEY ADJOINING AS VACATED UNDER RECORDING NUMBER 71111120425, AS WOULD ATTACH BY OPERATION OF LAW; AND

TOGETHER WITH THE WEST 4 FEET OF VACATED 1ST AVENUE SE.

SURVEY NOTES:
1. TOPOGRAPHIC SURVEY INFORMATION PROVIDED TO GROUP FOUR INC. BY:
PACE ENGINEERS
BUS LOOP BOUNDARY BY BERG

GROUP FOUR INC HAS NOT VERIFIED THE ACCURACY WITHIN THE INFORMATION PROVIDED BY PACE ENGINEERS OR THE BUS LOOP BOUNDARY BY BERG AND ACCEPTS NO LIABILITY FOR THE DATA ACCURACY.

2. GROUP FOUR INC PERFORMED ADDITIONAL BOUNDARY FOR ALL PARCELS AND SUPPLEMENTAL TOPOGRAPHY WITHIN THE PARCELS OF 2354300290, 2354530285, 2354300270, 2354300315 AND ALSO WITHIN THE CLARK STREET RIGHT-OF-WAY.

MATCH LINE SHEET 1 OF 2
MATCH LINE SHEET 2 OF 2

SITE LEGEND

- ALDER/DECIDUOUS TREE
- ASH/MAPLE TREE
- ASPEN TREE
- CEDAR TREE
- CHERRY/FRUIT TREE
- COTTONWOOD/DOGWOOD TREE
- FIR TREE
- ORNAMENTAL TREE
- PINE TREE
- SPRUCE TREE
- FOUND MONUMENT IN CASE
- NAIL & SHINER LS 30450
- PROPERTY CORNER/ FOUND CAPPED REBAR
- SET CAPPED REBAR LS 30450
- POST/BOLLARD
- CONCRETE/BRICK COLUMN
- 0.4' DIA BASKETBALL HOOP
- SIGN
- WETLAND FLAG
- CATCH BASIN (CB) TYPE 1/1L
- CATCH BASIN (CB) TYPE 2
- CULVERT
- STORM CLEANOUT
- STORM DOWNSPOUT
- SEWER CLEANOUT
- SEWER MANHOLE (SSMH)
- FIRE DEPARTMENT CONNECTION
- FIRE HYDRANT (2 FITTINGS)
- WATER/IRRIGATION METER
- WATER/IRRIGATION CONTROL VALVE (ICV)
- WATER VAULT
- DCVA DOUBLE CHECK VALVE ASSEMBLY
- TEST WELL
- GUY POLE & WIRE
- JUNCTION BOX
- LIGHT POLE
- POWER POLE
- POWER VAULT
- SIGNAL CONTROL BOX
- STREET LIGHT (SINGLE)
- TRAFFIC SIGNAL POLE
- TELEPHONE MANHOLE
- GUY ANCHOR
- GAS METER
- GAS VALVE
- SD— STORM LINE
- GAS— GAS LINE
- SS— SEWER LINE
- W— WATER LINE
- FO— FIBER OPTIC LINE
- UGC— UNDERGROUND CABLE LINE
- UGP— UNDERGROUND POWER
- OHP— OVERHEAD POWER LINE
- UT— UNDERGROUND TELE. LINE

VICINITY MAP
SCALE: 1"=2000'

NO.	REVISION	DATE	BY
1	UPDATE TOPOGRAPHIC SURVEY	1-19-16	DKR (JR)

BOUNDARY NOTES
PAPER BOUNDARY COMPUTED
FIELD BOUNDARY COMPUTED
FINAL BOUNDARY COMPUTED
CORNERS SET

1-19-16

GROUP FOUR Inc.
Land Surveying || Land Use Planning || Civil Engineering
Forest Resources || Biological Sciences
15630 JUANITA-WOODINVILLE WAY NE BOTHELL, WASHINGTON 98011
(425)779-4591 * (206)362-4244 * FAX(206)362-3819 * www.GRP4.com

FILENAME: N:\Projects\1510\CADfiles\EX1510-01-CD02-01.dwg
UPDATED: 4/7/2016 12:10 AM Rossmiss

BOUNDARY AND TOPOGRAPHIC SURVEY
FOR
ISSAQUAH MIDDLE SCHOOL BUS LOOP

CITY OF ISSAQUAH WASHINGTON

SHEET	OF
1	2

08-4512

Cornerstone
ARCHITECTURAL GROUP
6161 NE 175th Street, Suite 101
Kenmore, Washington 98028
Phone: 206.682.5000
cornerstonearch.com

© Cornerstone Architectural Group

CLARK ELEMENTARY SCHOOL
ISSAQUAH SCHOOL DISTRICT
400 1st AVE. SE
ISSAQUAH, WASHINGTON 98027

PERMIT SET

SHEET TITLE: EXISTING CONDITIONS SURVEY

DATE: 04-04-16 PROJECT NO: 191406

REVISIONS:

C2.00

SW1/4, NW1/4, SEC. 34, TWP. 24N, RGE 6E., W.M.

SW1/4, NW1/4 ,SEC. 34 ,TWP. 24 N. ,RGE. 6 E. ,W.M.

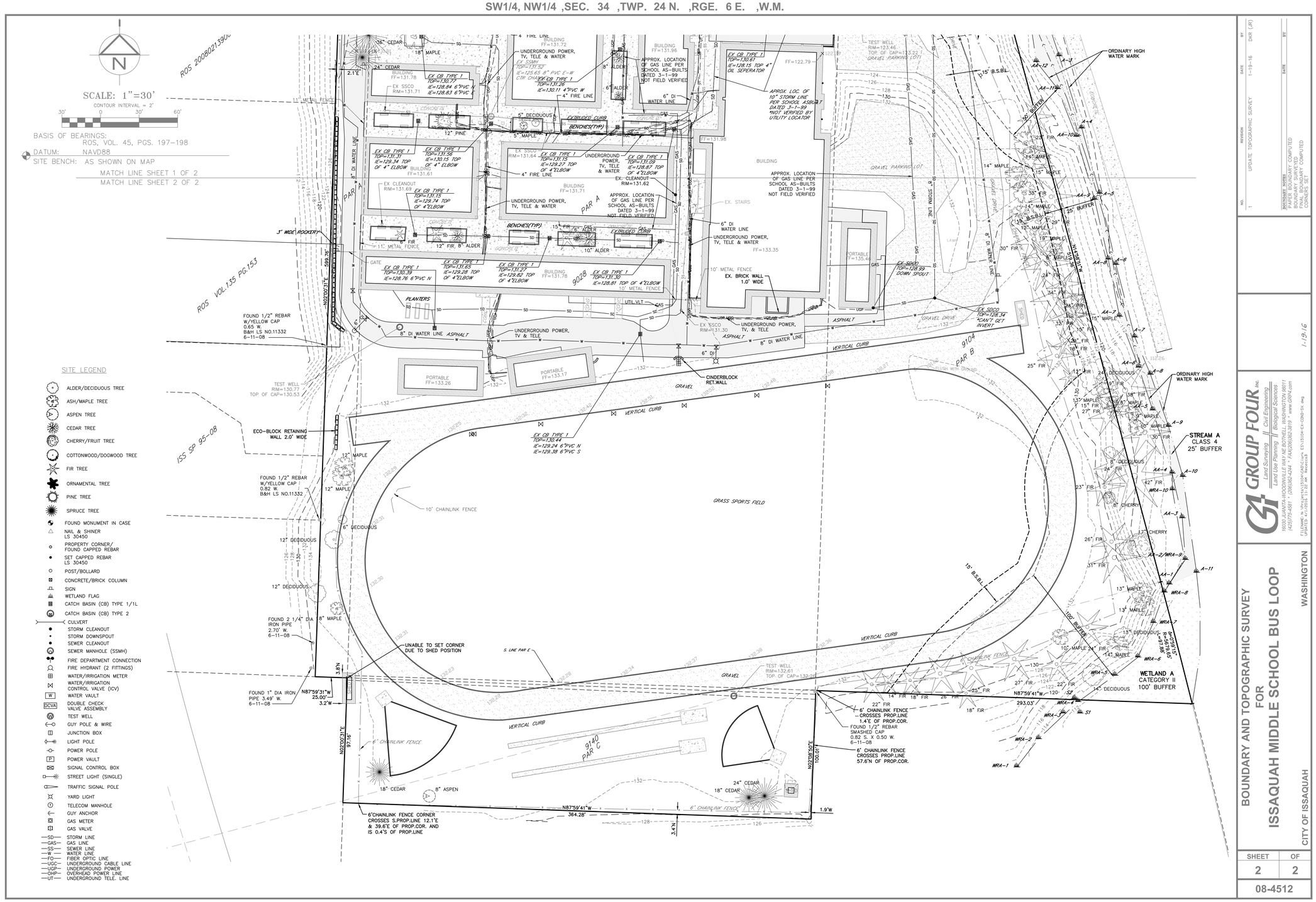

NO.	REVISION	DATE	BY
1	UPDATE TOPOGRAPHIC SURVEY	1-19-16	DGR (JK)

WORKMAN NOTES
FAIRER BOUNDARY COMPUTED
BOUNDARY SURVEYED
TOPOGRAPHIC SURVEY COMPUTED
CORNERS SET

1-19-16

GROUP FOUR, Inc.
Land Surveying // Civil Engineering
Land Use Planning // Biological Sciences
19930 JUANITA-WOODINVILLE WAY NE BOTHELL, WASHINGTON 98011
(425)775-4581 * (206)362-4244 * FAX(206)362-3919 * www.GRP4.com

FILENAME: N:\Proj-ect's\191\Clark-Clark EV\
UPDATED: 4/1/2016, 11:16 AM Rebecca

BOUNDARY AND TOPOGRAPHIC SURVEY FOR ISSAQUAH MIDDLE SCHOOL BUS LOOP

CITY OF ISSAQUAH WASHINGTON

SHEET	OF
2	2

08-4512

Cornerstone
ARCHITECTURAL GROUP
6161 NE 175th Street, Suite 101
Kenmore, Washington 98028
Phone: 206.682.5000
cornerstonearch.com

© Cornerstone Architectural Group

CLARK ELEMENTARY SCHOOL
ISSAQUAH SCHOOL DISTRICT
400 1st AVE. SE
ISSAQUAH, WASHINGTON 98027

PERMIT SET

SHEET TITLE: EXISTING CONDITIONS SURVEY

DATE: 04-04-16 PROJECT NO: 191406

REVISIONS:

C2.01

SW 1/4 NW 1/4 OF SEC. 34, TWP. 24N, RGE. 6E, W.M., KING COUNTY, WA

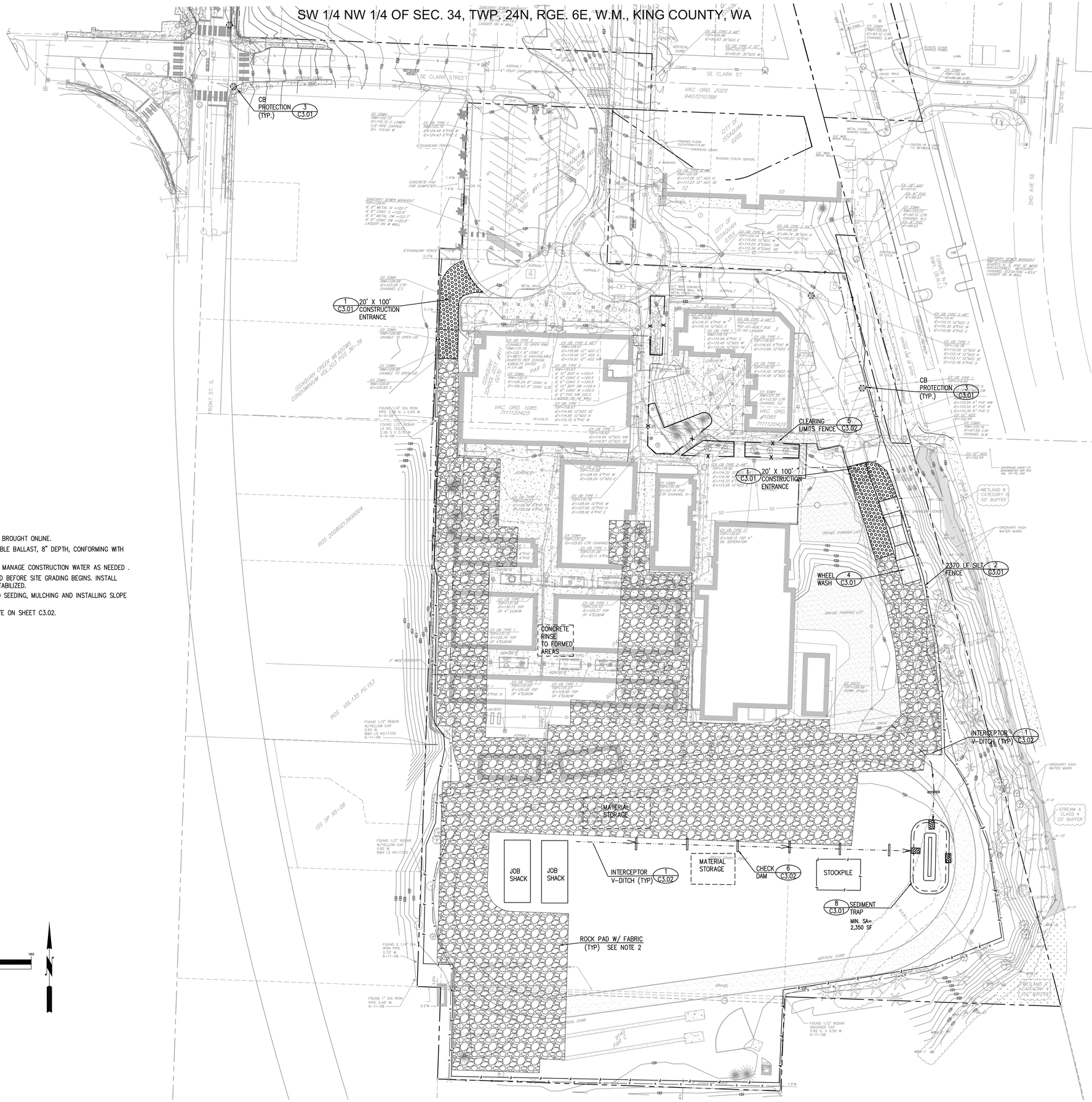

NOTES

1. INSTALL CB PROTECTION ONSITE AS NEW CBs ARE BROUGHT ONLINE.
2. ROCK PAD W/ FABRIC SHALL CONSIST OF PERMEABLE BALLAST, 8" DEPTH, CONFORMING WITH WSDOT 9-03.9(2) OVER MIRAFI 500X GEOTEXTILE.
3. CONTRACTOR TO PROVIDE ONE ELECTRIC PUMP TO MANAGE CONSTRUCTION WATER AS NEEDED .
4. STORMWATER/SEDIMENT PONDS MUST BE INSTALLED BEFORE SITE GRADING BEGINS. INSTALL STORMFILTER MEDIA AFTER SITE IS COMPLETELY STABILIZED.
5. SURFACE ROUGHEN ALL GRADES SLOPES PRIOR TO SEEDING, MULCHING AND INSTALLING SLOPE BLANKETS ON SIDE SLOPES.
6. FOR MANAGEMENT OF CONCRETE RINSATE SEE NOTE ON SHEET C3.02.

LEGEND

- ROCK PAD W/ FABRIC (TYP) SEE NOTE 2
- HYDROSEED
- BONDED FIBER MATRIX
- SEED AND MULCH (TYP)
- SILT FENCE (TYP) 2 C3.01
- CLEARING LIMITS FENCE 5 C3.02
- CONSTRUCTION FENCE/SCREEN
- CHECK DAM (TYP) 6 C3.02
- INTERCEPTOR V-DITCH (TYPICAL) 1 C3.02
- CATCH BASIN PROTECTION (TYP) 3 C3.01
- TREE PROTECTION BARRIER

GRAPHIC SCALE

40 0 20 40 80 160

(IN FEET)
1 inch = 40 ft.

DRAWING NAME:

PLOT DATE:

Cornerstone ARCHITECTURAL GROUP
Phone: 206.682.5000
cornerstonearch.com
8161 NE 175th Street, Suite 101
Kenmore, Washington 98028

© Cornerstone Architectural Group

STATE OF WASHINGTON REGISTERED PROFESSIONAL ENGINEER

2/23/16

CLARK ELEMENTARY SCHOOL
ISSAQUAH SCHOOL DISTRICT
400 1ST AVENUE SE
ISSAQUAH, WASHINGTON 98027

PERMIT SET

SHEET TITLE: TESC PLAN

DATE: 2-23-16

PROJECT NO:

REVISIONS:

C3.01

SW 1/4 NW 1/4 OF SEC. 34, TWP. 24N, RGE. 6E, W.M., KING COUNTY, WA

AS PER KING COUNTY ROAD STANDARDS, DRIVEWAYS SHALL BE PAVED TO THE EDGE OF R-O-W PRIOR TO INSTALLATION OF THE CONSTRUCTION ENTRANCE TO AVOID DAMAGING OF THE ROADWAY

IT IS RECOMMENDED THAT THE ENTRANCE BE CROWNED SO THAT RUNOFF DRAINS OFF THE PAD

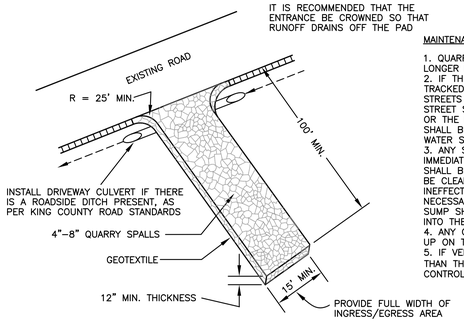

MAINTENANCE REQUIREMENTS

1. QUARRY SPALLS (OR HOG FUEL) SHALL BE ADDED IF THE PAD IS NO LONGER IN ACCORDANCE WITH THE SPECIFICATIONS.
2. IF THE ENTRANCE IS NOT PREVENTING SEDIMENT FROM BEING TRACKED ONTO PAVEMENT, THEN ALTERNATIVE MEASURES TO KEEP THE STREETS FREE OF SEDIMENT SHALL BE USED. THIS MAY INCLUDE STREET SWEEPING, AN INCREASE IN THE DIMENSIONS OF THE ENTRANCE, OR THE INSTALLATION OF A WHEEL WASH. IF WASHING IS USED, IT SHALL BE DONE ON AN AREA COVERED WITH CRUSHED ROCK, AND WASH WATER SHALL DRAIN TO A SEDIMENT TRAP OR POND.
3. ANY SEDIMENT THAT IS TRACKED ONTO PAVEMENT SHALL BE REMOVED IMMEDIATELY BY SWEEPING. THE SEDIMENT COLLECTED BY SWEEPING SHALL BE REMOVED OR STABILIZED ON SITE. THE PAVEMENT SHALL NOT BE CLEANED BY WASHING DOWN THE STREET, EXCEPT WHEN SWEEPING IS INEFFECTIVE AND THERE IS A THREAT TO THE PUBLIC SAFETY. IF IT IS NECESSARY TO WASH THE STREETS, THE CONSTRUCTION OF A SMALL SUMP SHALL BE CONSIDERED. THE SEDIMENT WOULD THEN BE WASHED INTO THE SUMP.
4. ANY QUARRY SPALLS THAT ARE LOOSENED FROM THE PAD AND END UP ON THE ROADWAY SHALL BE REMOVED IMMEDIATELY.
5. IF VEHICLES ARE ENTERING OR EXITING THE SITE AT POINTS OTHER THAN THE CONSTRUCTION ENTRANCE(S), FENCING SHALL BE INSTALLED TO CONTROL TRAFFIC.

1 STABILIZED CONSTRUCTION ENTRANCE

NOT TO SCALE

MAINTENANCE STANDARDS
1. ANY DAMAGE SHALL BE REPAIRED IMMEDIATELY.
2. IF CONCENTRATED FLOWS ARE EVIDENT UPHILL OF THE FENCE, THEY MUST BE INTERCEPTED AND CONVEYED TO A SEDIMENT TRAP OR POND.
3. IT IS IMPORTANT TO CHECK THE UPHILL SIDE OF THE FENCE FOR SIGNS OF FENCE CLOGGING AND ACTING AS A BARRIER TO FLOW AND THEN CAUSING CHANNELIZATION OF FLOWS PARALLEL TO THE FENCE. IF THIS OCCURS, REPLACE THE FENCE OR REMOVE THE TRAPPED SEDIMENT.
4. SEDIMENT MUST BE REMOVED WHEN THE SEDIMENT IS 6 INCHES HIGH.
IF THE FILTER FABRIC (GEOTEXTILE) HAS DETERIORATED DUE TO ULTRAVIOLET BREAKDOWN, IT SHALL BE REPLACED.

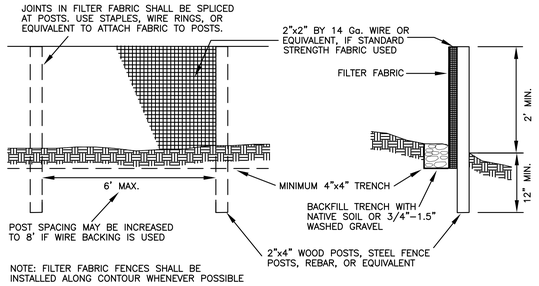

NOTE: FILTER FABRIC FENCES SHALL BE INSTALLED ALONG CONTOUR WHENEVER POSSIBLE

2 SILT FENCE

NOT TO SCALE

MAINTENANCE STANDARDS
1. ANY ACCUMULATED SEDIMENT ON OR AROUND INLET PROTECTION SHALL BE REMOVED IMMEDIATELY. SEDIMENT SHALL NOT BE REMOVED WITH WATER, AND ALL SEDIMENT MUST BE DISPOSED OF AS FILL ON SITE OR HAULED OFF SITE.
2. ANY SEDIMENT IN THE CATCH BASIN INSERT SHALL BE REMOVED WHEN SEDIMENT HAS FILLED ONE-THIRD OF THE AVAILABLE STORAGE. THE FILTER MEDIA FOR THE INSERT SHALL BE CLEANED OR REPLACED MONTHLY.
3. REGULAR MAINTENANCE IS CRITICAL. CATCH BASIN PROTECTION MAY FAIL SUDDENLY AND COMPLETELY IF NOT MAINTAINED PROPERLY.

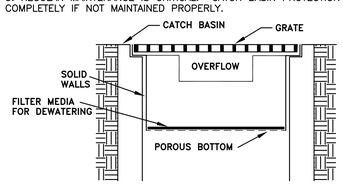

NOTE: THIS DETAIL IS ONLY SCHEMATIC. ANY INSERT IS ALLOWED THAT HAS A MIN. 0.5 C.F. OF STORAGE, THE MEANS TO DEWATER THE STORED SEDIMENT, AN OVERFLOW, AND CAN BE EASILY MAINTAINED.

3 CATCH BASIN INSERT

NOT TO SCALE

MAINTENANCE STANDARDS
1. ANY SEDIMENT DEPOSITION OF MORE THAN 0.5 FOOT SHALL BE REMOVED SO THAT THE CHANNEL IS RESTORED TO ITS DESIGN CAPACITY.
2. IF THE CHANNEL CAPACITY IS INSUFFICIENT FOR THE DESIGN STORM, IT MUST BE DETERMINED WHETHER THE PROBLEM IS LOCAL (E.G., A CONSTRICTION OR BEND) OR THE CHANNEL IS UNDER-DESIGNED, IF THE PROBLEM IS LOCAL, THE CHANNEL CAPACITY MUST BE INCREASED THROUGH CONSTRUCTION OF BERM(S) OR BY EXCAVATION. IF THE PROBLEM IS UNDER-DESIGNED, THE DESIGN ENGINEER SHALL BE NOTIFIED AND THE CHANNEL REDESIGNED TO A MORE CONSERVATIVE STANDARD.
3. THE CHANNEL SHALL BE EXAMINED FOR SIGNS OF SCOURING AND EROSION OF THE BED AND BANKS. IF SCOURING OR EROSION HAS OCCURRED, AFFECTED AREAS SHALL BE PROTECTED BY RIP-RAP OR AN EROSION CONTROL BLANKET OR NET.

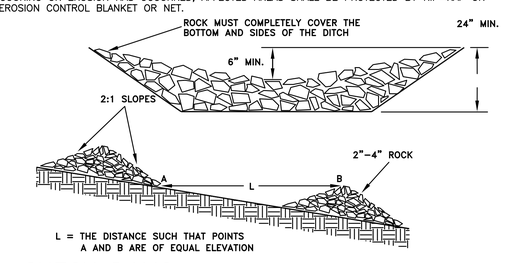

6 CHECK DAMS

NOT TO SCALE

MAINTENANCE STANDARDS
1. THE WHEEL WASH SHOULD START OUT EACH DAY WITH CLEAN WATER.
2. THE WASHWATER SHOULD BE CHANGED A MINIMUM OF ONCE PER DAY. ON PROJECTS WHERE MORE THAN 10-20 TRUCKS PER HOUR ARE EXPECTED, THE WASHWATER WILL NEED TO BE CHANGED MORE OFTEN.
3. WHEEL WASH OR TIRE BATH WASTEWATER SHALL BE DISCHARGED TO A SEPARATE ON-SITE TREATMENT SYSTEM SUCH AS A CLOSED-LOOP RECIRCULATION SYSTEM OR LAND APPLICATION, OR TO THE SANITARY SEWER SYSTEM WITH PROPER LOCAL SEWER DISTRICT APPROVAL OR PERMITS.

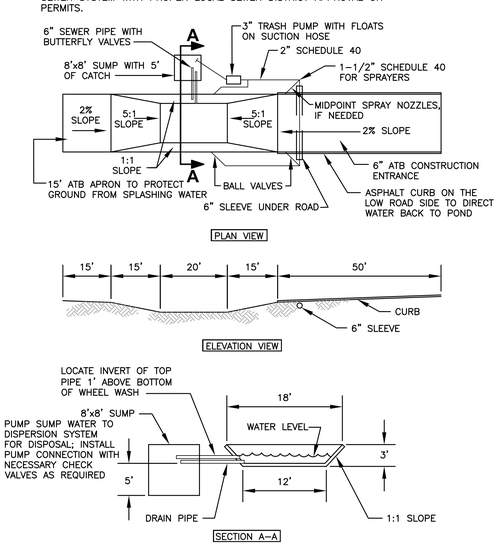

NOTES:
1. BUILD 8'x8' SUMP TO ACCOMODATE CLEANING BY TRACKHOE.
2. SEE PROJECT SPECIFICATIONS SECTION 2370 PART 2.1.H.

4 WHEEL WASH

NOT TO SCALE

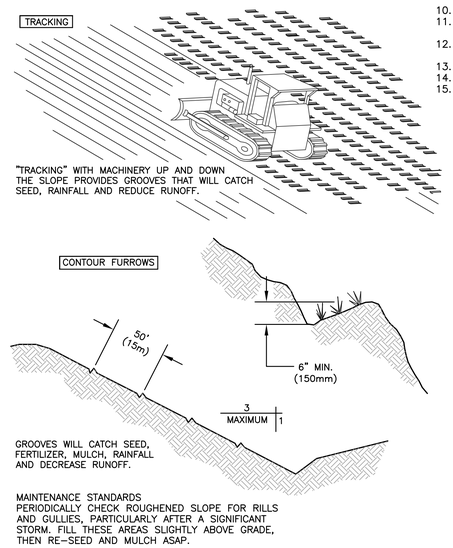

MAINTENANCE STANDARDS
PERIODICALLY CHECK ROUGHENED SLOPE FOR RILLS AND GULLIES, PARTICULARLY AFTER A SIGNIFICANT STORM. FILL THESE AREAS SLIGHTLY ABOVE GRADE, THEN RE-SEED AND MULCH ASAP.

5 SURFACE ROUGHENING

NOT TO SCALE

MAINTENANCE STANDARDS
1. GOOD CONTACT WITH THE GROUND MUST BE MAINTAINED, AND THERE MUST NOT BE EROSION BENEATH THE NET OR BLANKET.
2. ANY AREAS OF THE NET OR BLANKET THAT ARE DAMAGED OR NOT IN CLOSE CONTACT WITH THE GROUND SHALL BE REPAIRED OR STAPLED.
3. IF EROSION OCCURS DUE TO POORLY CONTROLLED DRAINAGE, THE PROBLEM SHALL BE FIXED AND THE ERODED AREA PROTECTED.

NOTE: BLANKET FABRIC SHALL BE BURLAP, COIR OR OTHER NATURAL BIODEGRADABLE MATERIAL.

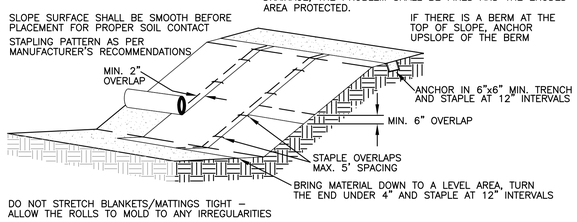

DO NOT STRETCH BLANKETS/MATTINGS TIGHT - ALLOW THE ROLLS TO MOLD TO ANY IRREGULARITIES

FOR SLOPES LESS THAN 3H:1V, ROLLS MAY BE PLACED IN HORIZONTAL STRIPS

LIME, FERTILIZE AND SEED BEFORE INSTALLATION. PLANTING OF SHRUBS, TREES, ETC. SHOULD OCCUR AFTER INSTALLATION.

7 SLOPE BLANKET INSTALLATION

NOT TO SCALE

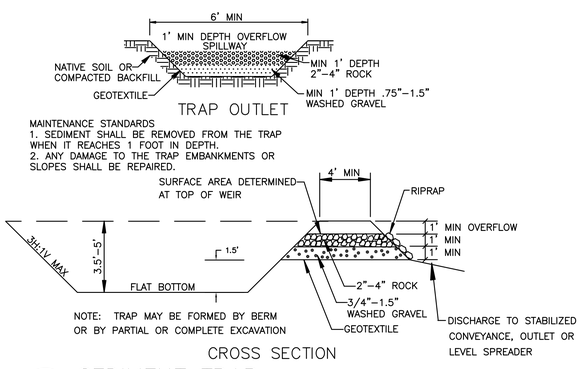

MAINTENANCE STANDARDS
1. SEDIMENT SHALL BE REMOVED FROM THE TRAP WHEN IT REACHES 1 FOOT IN DEPTH.
2. ANY DAMAGE TO THE TRAP EMBANKMENTS OR SLOPES SHALL BE REPAIRED.

8 SEDIMENT TRAP

NOT TO SCALE

STANDARD ESC PLAN NOTES

1. Approval of this erosion and sedimentation control (ESC) plan does not constitute an approval of permanent road or drainage design (e.g., size and location of roads, pipes, restrictors, channels, retention facilities, utilities, etc.).
2. The implementation of these ESC plans and the construction, maintenance, replacement, and upgrading of these ESC facilities is the responsibility of the applicant/ESC supervisor until all construction is approved.
3. The boundaries of the clearing limits shown on this plan shall be clearly flagged by survey tape or fencing, if required, prior to construction (SWDM Appendix D). During the construction period, no disturbance beyond the clearing limits shall be permitted. The clearing limits shall be maintained by the applicant/ESC supervisor for the duration of construction.
4. Stabilized construction entrances shall be installed at the beginning of construction and maintained for the duration of the project. Additional measures, such as constructed wheel wash systems or wash pads, may be required t ensure that all paved areas are kept clean and track out to road right of way does not occur for the duration of the project.
5. The ESC facilities shown on this plan must be constructed prior to or in conjunction with all clearing and grading so as to ensure that the transport of sediment to surface waters, drainage systems, and adjacent properties is minimized.
6. The ESC facilities shown on this plan are the minimum requirements for anticipated site conditions. During the construction period, these ESC facilities shall be upgraded as needed for unexpected storm events and modified to account for changing site conditions (e.g. additional cover measures, additional sump pumps, relocation of ditches and silt fences, perimeter protection etc.) as directed by King County.
7. The ESC facilities shall be inspected daily by the applicant/ESC supervisor and maintained to ensure continued proper functioning. Written records shall be kept of weekly reviews of the ESC facilities.
8. Any areas of exposed soils, including roadway embankments, that will not be disturbed for two consecutive days during the wet season or seven days during the dry season shall be immediately stabilized with the approved ESC methods (e.g., seeding, mulching, plastic covering, etc.).
9. Any area needing ESC measures that do not require immediate attention shall be addressed within seven (7) days.
10. The ESC facilities on inactive sites shall be inspected and maintained a minimum of once a month during the dry season, bi-monthly during the wet season, or within twenty four (24) hours following a storm event.
11. At no time shall more than one (1) foot of sediment be allowed to accumulate within a catch basin. All catch basins and conveyance lines shall be cleaned prior to paving. The cleaning operation shall not flush sediment-laden water into the downstream system.
12. Any permanent retention/detention facility used as a temporary settling basin shall be modified with the necessary erosion control measures and shall provide adequate storage capacity. If the facility is to function ultimately as an infiltration system, the temporary facility must be rough graded so that the bottom and sides are at least three feet above the final grade of the permanent facility.
13. Cover measures will be applied in conformance with Appendix D of the Surface Water Design Manual.
14. Prior to the beginning of the wet season (Oct. 1), all disturbed areas shall be reviewed to identify which ones can be seeded in preparation for the winter rains. Disturbed areas shall be seeded within one week of the beginning of the wet season. A sketch map of those areas to be seeded and those areas to remain uncovered shall be submitted to the DDES inspector.

RECOMMENDED CONSTRUCTION SEQUENCE

1. Hold the pre-construction meeting.
2. Post sign with name and phone number of ESC supervisor (may be consolidated with the required notice of construction sign).
3. Flag or fence clearing limits.
4. Install catch basin protection, if required.
5. Grade and install construction entrance(s).
6. Install perimeter protection (silt fence, compost wattles, etc.).
7. Construct sediment ponds and traps. Construct rough grading for rain gardens and biofiltration swales that will be used for erosion control.
8. Grade and stabilize construction roads.
9. Construct surface water controls (interceptor dikes, pipe slope drains, etc.) simultaneously with clearing and grading for project development.
10. Maintain erosion control measures in accordance with King County standards and manufacturer's recommendations.
11. Relocate erosion control measures, or install new measures so that as site conditions change, the erosion and sediment control is always in accordance with the King County Erosion and Sediment Control Standards.
12. Cover all areas that will be unworked for more than seven days during the dry season or two days during the wet season with straw, wood fiber mulch, compost, plastic sheeting, or equivalent.
13. Stabilize all areas within seven days of reaching final grade.
14. Seed, sod, stabilize, or cover any areas to remain unworked for more than 30 days.
15. Upon completion of the project, stabilize all disturbed areas and remove BMPs if appropriate.

OTHER TESC MEASURES

Polyacrylamide (PAM): The contractor shall be prepared to apply a liquid spray application of PAM to selected disturbed areas of the construction site for erosion protection. a total area of up to 2 acres of bare soil in up to three applications will be sprayed under the direction of the project civil engineer.

1. PAM shall be applied on dry soil at a maximum rate of 0.5 pound PAM per 1,000 gallons of water per 1 acre of bare soil.
2. Measures shall be taken to prevent PAM and overspray from reaching paved surfaces.
3. Application:
   a. Pre-measure the area where PAM is to be applied and calculate the amount of product and water necessary to provide coverage at the specified application rate (1/2 pound PAM/1,000 gallons/acre).
   b. Dissolve pre-measured dry granular PAM with a known quantity of clean water in a bucket several hours or overnight. PAM has infinite solubility in water, but dissolves very slowly. mechanical mixing will help dissolve PAM. always add PAM to water - not water to PAM.
   c. Pre-fill the water truck about 1/8 full with water. the water does not have to be potable, but it must have relatively low turbidity - in the range of 20 NTU or less.
   d. Add pam/water mixture to the truck.
   e. Completely fill the water truck to specified volume.
   f. Spray pam/water mixture onto dry soil until the soil surface is uniformly and completely wetted.

Concrete Rinsate: All rinse-off areas shall be approved by the project civil engineer. Concrete truck chutes, pumps, and internals shall be washed out only into formed areas awaiting installation of concrete or asphalt. Unused concrete remaining in the truck and pump shall be returned to the originating batch plant for recycling. Hand tools including, but not limited to, screeds, shovels, rakes, floats, and trowels shall be washed off only into formed areas awaiting installation of concrete or asphalt. When no formed areas are available, washwater and leftover product shall be contained in a lined container, eco-pan or in a sump designed to receive the materials. contained concrete shall be disposed of in a manner that does not violate groundwater or surface water quality standards.

Liquid Storage: All liquid construction materials shall be stored under cover in containers with lids. containers shall be placed in a shallow plastic tub or equivalent for spill containment.

Waste: All empty containers such as caulking tubes, paint cans, and other construction material container waste etc. shall be disposed of in a covered garbage container.

CB Protection: Add CB protection to new catch basins subject to receiving construction water as they are constructed and brought on-line.

SPILL RESPONSE EQUIPMENT

The following items shall be in a spill kit kept on the site. Spill kits shall be easily carried by two workers and transported in the bed of a pickup truck. Boxes shall be painted safety yellow and labeled: "SPILL CONTAINMENT KIT - EMERGENCY USE ONLY".

ITEM	QUANTITY
SWPPS Plan	1
Emergency response telephone numbers	1
Emergency response handbook	1
Grainger 95-gallon over pack	1
95-gallon plastic drum	1
SOCs - 3"x4'	4
SOCs - 3"x12'	2
Absorbent Pillows - 18"x18"	4
Disposable bags	10
Oil Absorbent Pads - 16"x20"	50
Broom	1
Shovel	1

TESC SUPPLIES

Extra erosion control materials shall be kept on hand so that supplies are immediately available. The following materials shall be stored on site:

MATERIAL	MEASURE	QUANTITY
Clear plastic, 6 mil	100-foot roll	2
Drainpipe, 6 or 8 inch diameter	25-foot section	4
Sandbags, filled	Each	25
Straw bales for mulching	Approx. 50# each	10
Quarry spalls	Ton	2
Washed gravel	Cubic yard	2
Geotextile fabric	100-foot roll	1
Catch basin inserts	Each	8
Steel "T" posts	Each	12
Compost Socks	25-foot section	2

Cornerstone
ARCHITECTURAL GROUP
Phone: 206.682.5000
cornerstonearch.com
8161 NE 175th Street, Suite 101
Kenmore, Washington 98028

© Cornerstone Architectural Group

2/23/16

CLARK ELEMENTARY SCHOOL
ISSAQUAH SCHOOL DISTRICT
400 1ST AVENUE SE
ISSAQUAH, WASHINGTON 98027

PERMIT SET

SHEET TITLE: TESC DETAILS

PROJECT NO:

DATE: 2-23-16

REVISIONS:

C3.01

DRAWING NAME:

PLOT DATE:

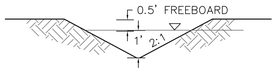

MAINTENANCE STANDARDS
1. DAMAGE RESULTING FROM RUNOFF OR CONSTRUCTION ACTIVITY SHALL BE REPAIRED IMMEDIATELY.
2. IF THE FACILITIES DO NOT REGULARLY RETAIN STORM RUNOFF, THE CAPACITY AND/OR FREQUENCY OF THE DIKES/SWALES SHALL BE INCREASED.

1 INTERCEPTOR DITCH

NOT TO SCALE

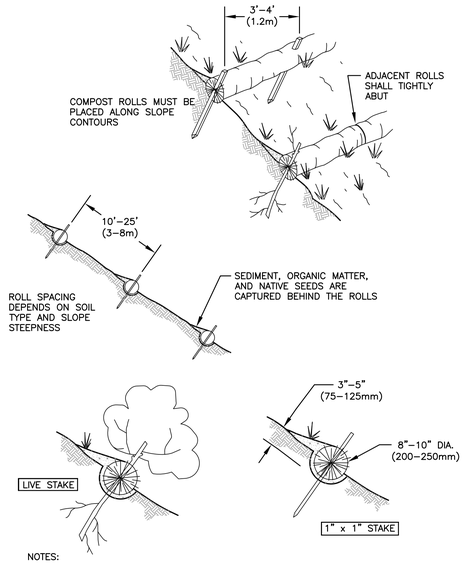

NOTES:
1. COMPOST ROLL INSTALLATION REQUIRES THE PLACEMENT AND SECURE STAKING OF THE ROLL IN A TRENCH, 3" x 5" (75-125mm) DEEP, DUG ON CONTOUR. RUNOFF MUST NOT BE ALLOWED TO RUN UNDER OR AROUND ROLL.
2. WATTLE FABRIC SHALL BE BIODEGRADABLE AND CONTAIN NO PLASTIC.

MAINTENANCE STANDARDS
1. INSPECT WATTLES PRIOR TO FORECASTED RAIN, DAILY DURING EXTENDED RAIN EVENTS, AFTER RAIN EVENTS, WEEKLY DURING THE WET SEASON. AND AT TWO WEEK INTERVALS AT ALL OTHER TIMES OF THE YEAR.
2. REPAIR OR REPLACE SPLIT, TORN, RAVELING, OR SLUMPING WATTLES.
3. REMOVE SEDIMENT ACCUMULATIONS WHEN EXCEEDING ½ THE HEIGHT BETWEEN THE TOP OF THE WATTLE AND THE GROUND SURFACE.
4. WHEN THE WATTLE IS NO LONGER NEEDED, IT SHALL BE CUT OPEN AND THE COMPOST DISPERSED ON TOP OF THE SOIL FOR FINAL SEEDING. THE MESH MATERIAL MUST BE DISPOSED OF PROPERLY AS SOLID WASTE. IF SPILLS OF EQUIPMENT FLUIDS HAVE OCCURRED THAT HAVE CONTAMINATED THE WATTLE, THE COMPOST MUST BE DISPOSED OF AS SOLID WASTE.

2 COMPOST WATTLES

NOT TO SCALE

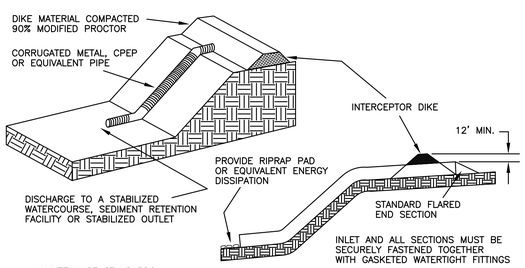

MAINTENANCE STANDARDS
1. THE INLET SHALL NOT BE UNDERCUT OR BYPASSED BY WATER. IF THERE ARE PROBLEM, THE HEAD WALL SHALL BE APPROPRIATELY REINFORCED.
2. NO EROSION SHALL OCCUR AT THE OUTLET POINT. IF EROSION OCCURS, ADDITIONAL PROTECTION SHALL BE ADDED.

3 PIPE SLOPE DRAIN

NOT TO SCALE

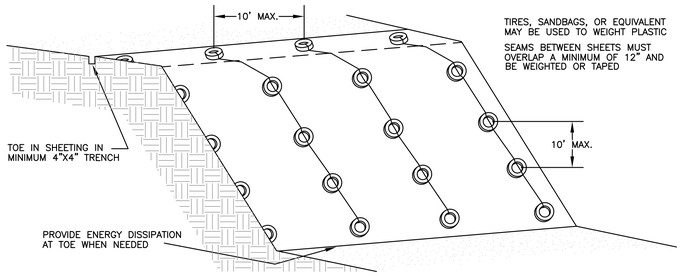

MAINTENANCE STANDARDS
1. TORN SHEETS MUST BE REPLACED AND OPEN SEAMS REPAIRED.
2. IF THE PLASTIC BEGINS TO DETERIORATE DUE TO UV RADIATION, IT MUST BE COMPLETELY REMOVED AND REPLACED.
3. WHEN THE PLASTIC IS NO LONGER NEEDED, IT SHALL BE REPLACED.

4 PLASTIC COVERING

NOT TO SCALE

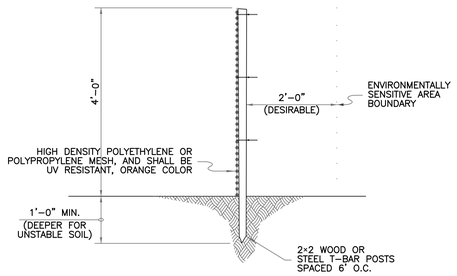

5 CLEARING LIMITS FENCE

NOT TO SCALE

MAINTENANCE STANDARDS
1. ANY SEDIMENT DEPOSITION OF MORE THAN 0.5 FOOT SHALL BE REMOVED SO THAT THE CHANNEL IS RESTORED TO ITS DESIGN CAPACITY.
2. IF THE CHANNEL CAPACITY IS INSUFFICIENT FOR THE DESIGN STORM, IT MUST BE DETERMINED WHETHER THE PROBLEM IS LOCAL (E.G., A CONSTRICTION OR BEND) OR THE CHANNEL IS UNDER-DESIGNED, IF THE PROBLEM IS LOCAL, THE CHANNEL CAPACITY MUST BE INCREASED THROUGH CONSTRUCTION OF BERM(S) OR BY EXCAVATION. IF THE PROBLEM IS UNDER-DESIGNED, THE DESIGN ENGINEER SHALL BE NOTIFIED AND THE CHANNEL REDESIGNED TO A MORE CONSERVATIVE STANDARD.
3. THE CHANNEL SHALL BE EXAMINED FOR SIGNS OF SCOURING AND EROSION OF THE BED AND BANKS. IF SCOURING OR EROSION HAS OCCURRED, AFFECTED AREAS SHALL BE PROTECTED BY RIP-RAP OR AN EROSION CONTROL BLANKET OR NET.

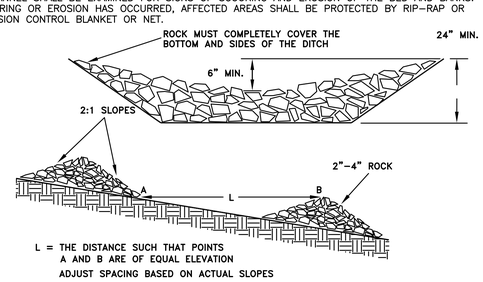

6 CHECK DAMS

NOT TO SCALE

Cornerstone
ARCHITECTURAL GROUP
5161 NE 175th Street, Suite 101
Kenmore, Washington 98028
Phone: 206.682.5000
cornerstonearch.com

© Cornerstone Architectural Group

2/23/16

CLARK ELEMENTARY SCHOOL
ISSAQUAH SCHOOL DISTRICT
400 1ST AVENUE SE
ISSAQUAH, WASHINGTON 98027

PERMIT SET

SHEET TITLE: TESC DETAILS

DATE: 2-23-16
REVISIONS:

PROJECT NO:

C3.02

DRAWING NAME:

PLOT DATE:

SW1/4, NW1/4, SEC. 34, TWP. 24N, RGE 6E., W.M.

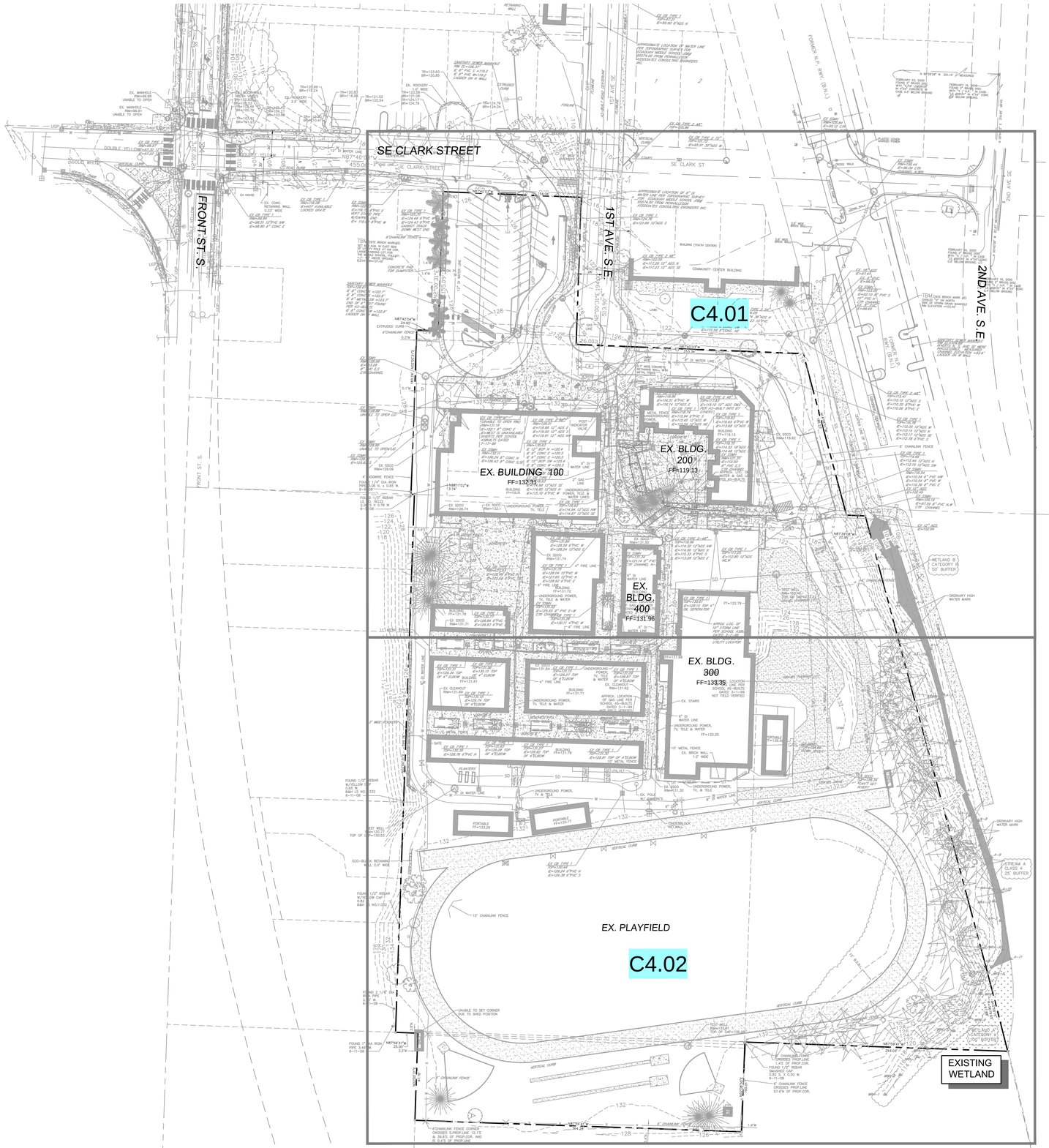

N

GRAPHIC SCALE
0 25 50 100 FEET
1" = 50 FEET

Cornerstone
ARCHITECTURAL GROUP
Phone: 206.682.5000
cornerstonearch.com
6161 NE 175th Street, Suite 101
Kenmore, Washington 98028

© Cornerstone Architectural Group

JOSEPH B. MOON
STATE OF WASHINGTON
38972
PROFESSIONAL ENGINEER
04/04/16

CLARK ELEMENTARY SCHOOL
ISSAQUAH SCHOOL DISTRICT
400 1st AVE. SE
ISSAQUAH, WASHINGTON 98027

CALL 2 BUSINESS DAYS BEFORE YOU DIG 811 OR 1-800-424-5555

THESE DRAWINGS ARE NOT TO BE USED FOR CONSTRUCTION UNLESS SIGNED BY THE REVIEWING AGENCY

Integrity Works
Consulting Engineers, LLC
170 W. Dayton St. Suite 204 Edmonds WA 98020
O: 425.967.7913 C: 206.920.9410

PERMIT SET

SHEET TITLE: DEMOLITION OVERVIEW PLAN

PROJECT NO: 191406

DATE: 04-04-16

REVISIONS:

C4.00

SW1/4, NW1/4, SEC. 34, TWP. 24N, RGE 6E., W.M.

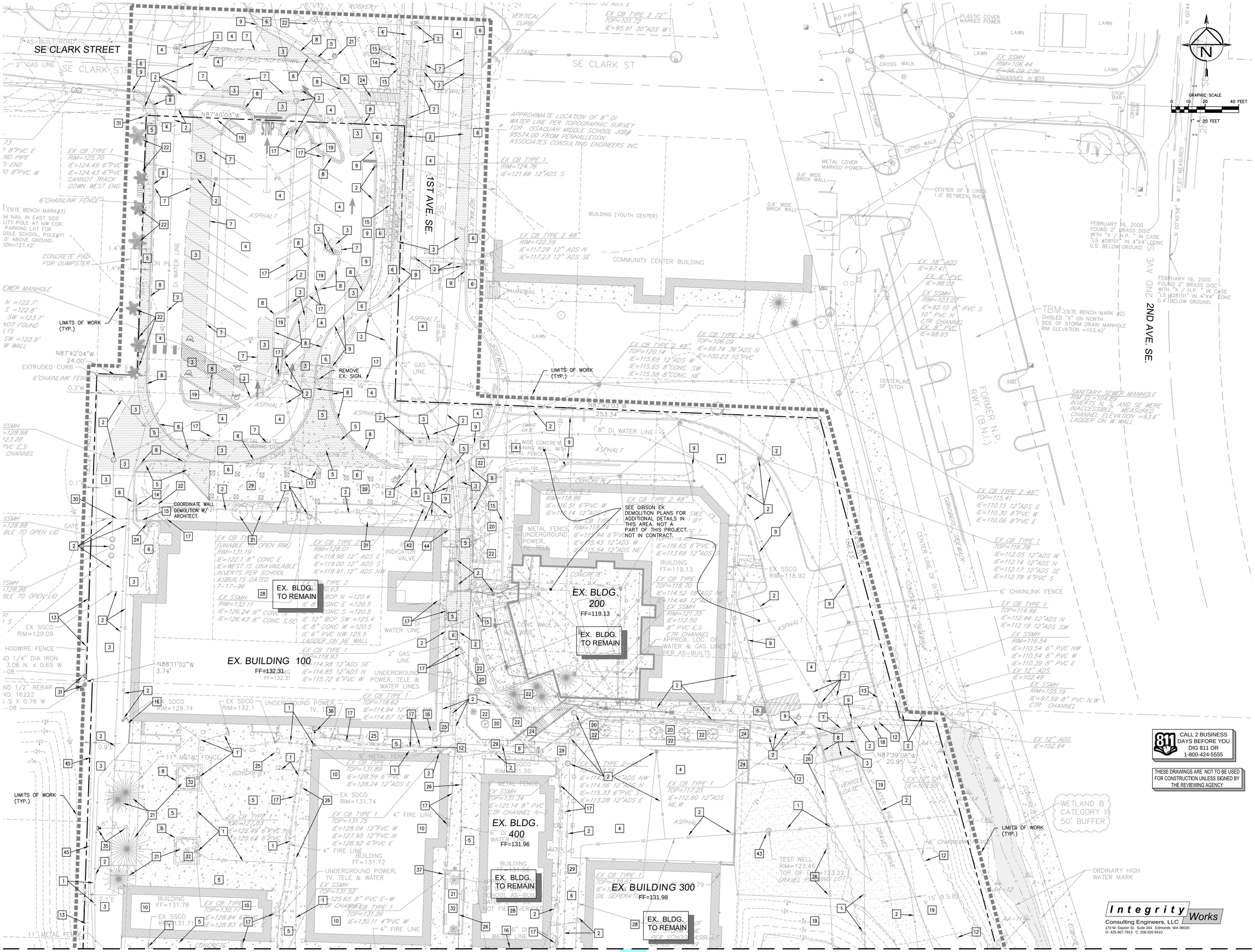

CALL 2 BUSINESS DAYS BEFORE YOU DIG 811 OR 1-800-424-5555

THESE DRAWINGS ARE NOT TO BE USED FOR CONSTRUCTION UNLESS SIGNED BY THE REVIEWING AGENCY

Integrity Works
Consulting Engineers, LLC
170 W. Dayton St. Suite 204 Edmonds WA 98020
O: 425.967.7913 C: 206.920.9410

Cornerstone
ARCHITECTURAL GROUP
6161 NE 175th Street, Suite 101
Kenmore, Washington 98028
Phone: 206.682.5000
cornerstonearch.com

© Cornerstone Architectural Group

JOSEPH B. MOON
STATE OF WASHINGTON
38972
PROFESSIONAL ENGINEER
04/04/16

CLARK ELEMENTARY SCHOOL
ISSAQUAH SCHOOL DISTRICT
400 1st AVE. SE
ISSAQUAH, WASHINGTON 98027

PERMIT SET

SHEET TITLE: DEMOLITION PLAN

DATE: 04-04-16 PROJECT NO: 191406

REVISIONS:

C4.01

MATCHLINE – SEE SHEET C4.01

SW1/4, NW1/4, SEC. 34, TWP. 24N, RGE 6E., W.M.

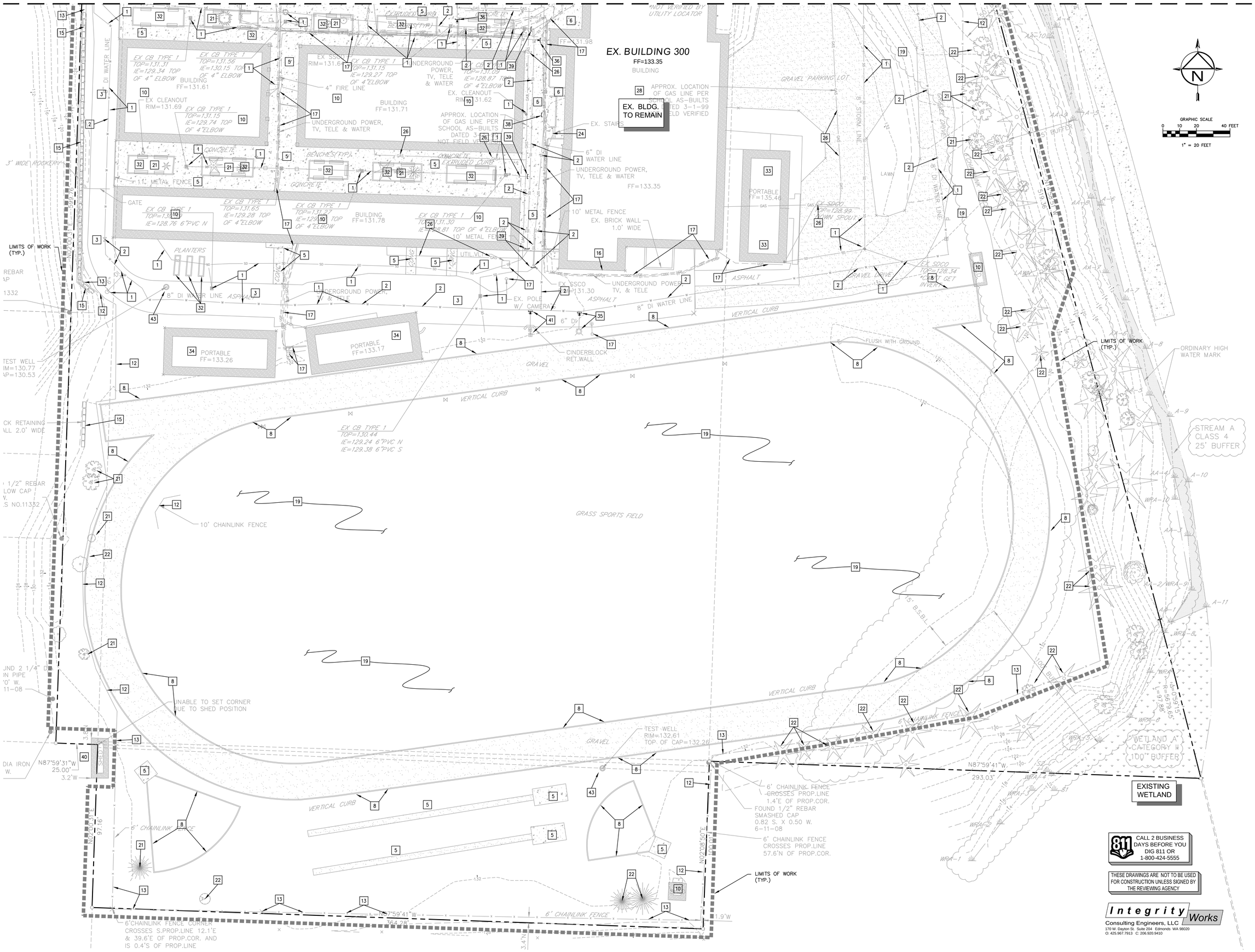

Cornerstone
ARCHITECTURAL GROUP
6161 NE 175th Street, Suite 101
Kenmore, Washington 98028
Phone: 206.682.5000
cornerstonearch.com

© Cornerstone Architectural Group

JOSEPH B. MOON
STATE OF WASHINGTON
34972
PROFESSIONAL ENGINEER
04/04/16

CLARK ELEMENTARY SCHOOL
ISSAQUAH SCHOOL DISTRICT
400 1st AVE. SE
ISSAQUAH, WASHINGTON 98027

PERMIT SET

SHEET TITLE: DEMOLITION PLAN

DATE: 04-04-16 PROJECT NO: 191406

REVISIONS:

C4.02

DEMOLITION GENERAL NOTES

1. IT IS THE INTENT OF THE WORK UNDER THIS CONTRACT TO INCLUDE, BUT NOT LIMITED TO, THE DEMOLITION OF EXISTING PAVING, UTILITIES, AND OTHER EXISTING SITE IMPROVEMENTS INCLUDING THEIR UNDERGROUND COMPONENTS AS CLARIFIED BY THIS DRAWING UNLESS OTHERWISE NOTED. IT IS THE CONTRACTOR'S RESPONSIBILITY TO FULLY REVIEW THE SITE CONDITIONS AND TO CORRELATE THESE OBSERVATIONS WITH THE PROJECT WORK AND INCLUDE ALL NECESSARY DEMOLITION, WHETHER SHOWN OR NOT, AND INCLUDE ALL SUCH COSTS IN THE SCOPE OF WORK.
2. IT IS THE INTENT OF THIS CONTRACT TO CONDUCT ALL CLEARING NECESSARY TO COMPLETE WORK ASSOCIATED WITH THIS PROJECT.
3. CONTRACTOR SHALL LEGALLY DISPOSE OF ALL DEMOLISHED AND REMOVED MATERIALS UNLESS OTHERWISE NOTED.
4. IT IS THE RESPONSIBILITY OF THE CONTRACTOR TO COMPLETELY COORDINATE UTILITY DEMOLITION WITH NEW CONSTRUCTION.
5. EXISTING UTILITIES AND UNDERGROUND STRUCTURES SHOWN ON THE PLANS ARE BASED UPON THE BEST AVAILABLE PUBLIC AND/OR PRIVATE RECORDS AS SUPPLIED BY THE PROJECT OWNER AND/OR DATA OBTAINED FROM LOCAL AGENCIES ASSOCIATED WITH THE PARTICULAR UTILITY. NEITHER THE OWNER NOR THE ENGINEER GUARANTEE ACCURACY OR COMPLETENESS OF THIS INFORMATION AND ASSUME NO RESPONSIBILITY FOR IMPROPER LOCATIONS SHOWN ON THE CONSTRUCTION PLANS. OTHER UNDERGROUND FACILITIES NOT SHOWN ON THE DRAWINGS MAY BE ENCOUNTERED DURING THE COURSE OF CONSTRUCTION. ALL ELEVATIONS SHOWN ON THE DRAWINGS SHALL BE VERIFIED BY THE CONTRACTOR PRIOR TO CONSTRUCTION.
6. IF CHANGED PREEXISTING CONDITIONS ARE ENCOUNTERED, THE CONTRACTOR SHALL NOTIFY THE ENGINEER PROMPTLY OF (1) PREEXISTING SUBSURFACE CONDITIONS DIFFERING FROM THOSE INDICATED IN THE PLANS, OR (2) PREEXISTING UNKNOWN SUBSURFACE CONDITIONS, DIFFERING MATERIALLY FROM THOSE ORIGINALLY ENCOUNTERED AND GENERALLY RECOGNIZED AS INHERENT IN WORK OF THE CHARACTER PROVIDED FOR IN THE CONTRACT. THE CONTRACTOR SHALL MAKE NO CLAIMS TO THE ENGINEER AND/OR OWNER FOR COMPENSATION FOR EXTRA WORK RESULTING FROM CHANGED CONDITIONS UNLESS THE OWNER HAS APPROVED THE WORK IN WRITING.
7. CONTRACTOR SHALL CALL THE UTILITIES UNDERGROUND LOCATION CENTER FOR FIELD LOCATION OF ALL UTILITIES AND SHALL NOT BEGIN EXCAVATION ACTIVITIES UNTIL ALL KNOWN UNDERGROUND FACILITIES IN THE VICINITY OF THE PROPOSED WORK HAVE BEEN LOCATED AND MARKED.
8. THE CONTRACTOR IS RESPONSIBLE FOR REVIEWING ALL UTILITY PURVEYOR, AND CITY/STATE RECORDS RELATIVE TO EXISTING UNDERGROUND UTILITIES. THE CONTRACTOR IS RESPONSIBLE FOR AVOIDING DAMAGE TO THESE FACILITIES AND SHALL RESTORE ALL UTILITIES AT CONTRACTOR'S OWN EXPENSE AS NECESSARY.
9. CONTRACTOR SHALL VERIFY THAT ALL UTILITY SERVICES TO BE DEMOLISHED HAVE BEEN DISCONNECTED PRIOR TO DEMOLITION ACTIVITIES.
10. ERECT BARRIERS, SHORING AND THE LIKE TO PROTECT PERSONNEL, CONSTRUCTION AND VEGETATION TO REMAIN. COMPLY WITH ALL STATE AND LOCAL AGENCY REQUIREMENTS.
11. DO NOT SHUT OFF OR CAP UTILITIES WITHOUT PRIOR NOTICE TO THE LOCAL UTILITY PURVEYORS.
12. MAINTAIN VEHICULAR AND PEDESTRIAN TRAFFIC ROUTES: ENSURE MINIMUM INTERFERENCE WITH ROADS, STREETS, SIDEWALKS, AND ADJACENT FACILITIES; DO NOT CLOSE OR OBSTRUCT STREETS, SIDEWALKS, OR PASSAGEWAYS WITHOUT PERMISSION FROM AUTHORITIES HAVING JURISDICTION; MAINTAIN FIRE ACCESS ALONG ACCESS ROAD AT ALL TIMES; MEET ALL APPLICABLE CODES AND ORDINANCES.
13. PROTECT FROM HARM ANY TREES, OR OTHER OBJECTS SELECTED TO REMAIN.
14. DO NOT DAMAGE EXISTING IMPROVEMENTS TO REMAIN.
15. RESTORE ANY EXISTING IMPROVEMENTS DAMAGED BY CONSTRUCTION ACTIVITIES TO IT'S ORIGINAL CONDITION, AS ACCEPTABLE TO OWNER. REPAIR ANY DAMAGE TO ADJACENT STRUCTURES, UTILITIES, SITE, AND WORK OF THIS CONTRACT TO REMAIN AT NO ADDITIONAL COST TO OWNER.
16. NO BLASTING ON SITE. DO NOT USE EXPLOSIVES.
17. WATER DEBRIS AS NECESSARY TO LIMIT DUST TO LOWEST PRACTICABLE LEVEL. DO NOT WATER TO EXTENT CAUSING FLOODING, CONTAMINATED RUNOFF OR ICING.
18. REMOVE EXISTING ABOVE-GRADE AND BELOW-GRADE IMPROVEMENTS AS INDICATED AND AS NECESSARY TO FACILITATE NEW CONSTRUCTION. CARE SHALL BE TAKEN THAT DAMAGE DOES NOT OCCUR TO EXISTING PAVEMENT WHICH IS TO REMAIN IN PLACE AND THAT ALL PAVEMENT REMOVALS ARE ACCOMPLISHED BY MAKING A NEAT VERTICAL SAW CUT AT THE BOUNDARIES OF THE AREA TO BE REMOVED.
19. REMOVE TREES, GROWTH AND UNDERBRUSH AS REQUIRED FOR NEW CONSTRUCTION AND AS INDICATED. REMOVAL OPERATIONS SHALL BE PERFORMED IN A MANNER TO PROTECT PROPERTY.
20. MAKE PAVING CUTS AT CLOSEST EXISTING JOINT.
21. THE CONTRACTOR SHALL BE RESPONSIBLE FOR FURNISHING, SETTING AND MARKING ALL LINE AND LOCATION STAKES, INCLUDING OFFSETS AND GENERAL CONSTRUCTION STAKING. WHEN WORK REQUIRING CONTROL IS BEING PERFORMED, ALL NECESSARY RELATED EQUIPMENT, SUPPLIES AND INSTRUMENTS SHALL BE ON SITE. A QUALIFIED LAYOUT ENGINEER, SURVEYOR, OR TECHNICAL SPECIALIST MUST BE ASSIGNED TO THE CONTRACTOR'S CREW FOR THIS WORK. THIS EQUIPMENT AND PERSONNEL MUST BE AVAILABLE, AT NO ADDITIONAL COST TO OWNER FOR THE PURPOSE OF VERIFYING LAYOUT AND CERTIFYING THE ACCURACY OF WORK ON THE SITE.
22. PROVIDE FOR THE PROTECTION OF PERSONS PASSING AROUND OR THROUGH THE AREA OF DEMOLITION.
23. TRAFFIC: DO NOT OBSTRUCT WALKS OR PUBLIC WAYS WITHOUT THE WRITTEN PERMISSION OF GOVERNING AUTHORITIES AND OF THE OWNER. WHERE ROUTES ARE PERMITTED TO BE CLOSED, PROVIDE ALTERNATE ROUTES IF REQUIRED.
24. COMPLETELY REMOVE ALL GROWTH INCLUDING COMPLETE ROOT SYSTEMS OF TREES, SHRUBS, HERBACEOUS WEEDS, AND GRASSES.
25. PROVIDE PROTECTIVE MEASURES TO ENSURE FREE AND SAFE PASSAGE OF PERSONS TO AND FROM OCCUPIED AREAS.
26. WITHOUT COST OR DELAY TO THE OWNER, REPAIR ANY DAMAGES BY THE CONTRACTOR TO FACILITIES TO REMAIN.
27. THE CONTRACTOR IS RESPONSIBLE FOR PRESERVING ALL BENCHMARKS AND STAKES AND THE REPLACEMENT OF ANY THAT ARE DISPLACED OR MISSING.
28. THE REFUSE RESULTING FROM CLEARING AND GRUBBING SHALL BE DISPOSED OF BY THE CONTRACTOR IN A MANNER CONSISTENT WITH ALL GOVERNMENT REGULATIONS. IN NO CASE SHALL REFUSE MATERIAL BE LEFT ON THE PROJECT SITE, SHOVED ONTO ABUTTING PRIVATE PROPERTIES, OR BE BURIED IN EMBANKMENTS OR TRENCHES ON THE PROJECT SITE. DEBRIS SHALL NOT BE DEPOSITED IN ANY STREAM OR BODY OF WATER, WETLAND, OR IN ANY STREET OR ALLEY, OR UPON ANY PRIVATE PROPERTY EXCEPT BY WRITTEN CONSENT OF THE PRIVATE PROPERTY OWNER. MAINTAIN HAULING ROUTES CLEAN AND FREE OF ANY DEBRIS RESULTING FROM DEMOLITION/CONSTRUCTION WORK ON THIS PROJECT.
29. CONTRACTOR SHALL CAP ALL EXISTING UTILITIES TO BE ABANDONED IN PLACE.

DEMOLITION KEY NOTES

1. DEMOLISH AND REMOVE ALL EXISTING UNDERGROUND UTILITIES AND/OR STRUCTURES UNDER PROPOSED BUILDINGS. EXISTING UTILITIES UNDER PROPOSED LANDSCAPED AREAS AND PAVING SHALL BE EITHER FILLED WITH CDF AND ABANDONED IN PLACE OR COMPLETELY REMOVED FOR PIPES 8" AND LARGER. IN ALL CASES, COMPLETELY REMOVE UNDERGROUND STRUCTURES.
2. PRESERVE AND PROTECT EXISTING UNDERGROUND UTILITIES AND/OR STRUCTURES.
3. DEMOLISH AND REMOVE EXISTING ASPHALT PAVING.
4. PRESERVE AND PROTECT EXISTING ASPHALT PAVING TO REMAIN.
5. DEMOLISH AND REMOVE EXISTING CONCRETE PAVING.
6. PRESERVE AND PROTECT EXISTING CONCRETE PAVING.
7. SAWCUT EX. PAVEMENT WITH NEAT EDGE.
8. DEMOLISH AND REMOVE EXISTING CURB.
9. PRESERVE AND PROTECT EXISTING CURB.
10. DEMOLISH AND REMOVE EXISTING BUILDING AND ASSOCIATED FOUNDATION. SEE ARCHITECTURAL PLANS FOR DEMOLITION OF EX. BUILDING.
11. N/A
12. DEMOLISH EXISTING FENCE AS NECESSARY.
13. PRESERVE AND PROTECT EXISTING FENCE.
14. DEMOLISH AND REMOVE EXISTING WALL/ROCKERY. COORDINATE WORK WITH ENGINEER AS NECESSARY.
15. PRESERVE AND PROTECT EXISTING WALL/ROCKERY.
16. CONTRACTOR SHALL FIELD LOCATE EX. BUILDING FOOTING DRAIN AND COORDINATE CONNECTION TO NEW STORM SYSTEM WITH ENGINEER.
17. SEE ELECTRICAL PLANS FOR POWER/LIGHTING/COMM. DEMOLITION INFORMATION. COORDINATE WORK WITH ELEC. ENGINEER AND UTILITY PURVEYOR.
18. PRESERVE AND PROTECT EXISTING POWER/LIGHT POLE, FOUNDATION AND ASSOCIATED POWER LINES.
19. CLEAR, GRUB, AND STRIP EXISTING VEGETATION.
20. SAVE AND PROTECT EXISTING VEGETATION.
21. REMOVE EXISTING TREE. CONTRACTOR SHALL COORDINATE WORK WITH THE OWNER AND LANDSCAPE ARCHITECT PRIOR TO TREE REMOVAL. CONTRACTOR SHALL IDENTIFY WITH ORANGE PAINTED "X" AND/OR ORANGE FLAGGING TREES TO BE REMOVED. TREE REMOVAL INCLUDES COMPLETE REMOVAL OF ROOT MASS, ESPECIALLY UNDER PROPOSED BUILDING FOOTPRINT, UNLESS OTHERWISE DIRECTED BY THE OWNER.
22. PRESERVE AND PROTECT EXISTING TREE. CONTRACTOR SHALL COORDINATE TREE PROTECTION WITH THE OWNER'S ARBORIST TO ENSURE THAT THE PROPOSED WORK WILL NOT DAMAGE THE EXISTING TREE. (1 / C4.04)
23. SEE ARCHITECTURAL PLANS FOR SELECTIVE DEMOLITION OF EX. STAIRS.
24. PRESERVE AND PROTECT EXISTING CONCRETE STAIRS.
25. SEE ARCHITECTURAL PLANS FOR DEMOLITION OF EX. WALKWAY CANOPY.
26. CONTRACTOR SHALL COORDINATE RELOCATION/DEMOLITION OF EXISTING GAS LINE/METER WITH UTILITY PURVEYOR, MECH. ENGINEER, AND CIVIL ENGINEER PRIOR TO CONSTRUCTION.
27. N/A
28. SEE ARCHITECTURAL PLANS FOR SELECTIVE DEMOLITION OF EX. BUILDING.
29. PRESERVE AND PROTECT EXISTING WALKWAY, ROOF CANOPY, HANDRAILS, COLUMNS AND ASSOCIATED FOUNDATIONS.
30. DEMOLISH AND REMOVE EXISTING GATE.
31. PRESERVE AND PROTECT EXISTING PROPERTY CORNER.
32. DEMOLISH AND REMOVE EXISTING PLANTERS, BENCHES, AND ASSOCIATED PLANTS, SOIL, ETC.
33. PRESERVE AND PROTECT EXISTING PORTABLE CLASSROOM TO REMAIN.
34. RELOCATE EXISTING PORTABLE CLASSROOM. SEE ARCHITECTURAL PLANS FOR NEW LOCATION. COORDINATE WORK WITH ARCHITECT AND OWNER.
35. REMOVE EX. FIRE HYDRANT. CONTRACTOR SHALL REMOVE EX. GATE VALVE AND INSTALL BLIND FLANGE W/ CONC. THRUST BLOCK AT MAIN.
36. CUT AND CAP (MJ) EX. WATERMAIN. INSTALL CONC. THRUST BLOCK.
37. PRIOR TO CONSTRUCTION, CONTRACTOR SHALL POTHOLE EX. WATERMAIN TO DETERMINE WHICH THE BUILDING THE POST INDICATOR VALVE IS SERVICING. COORDINATE WORK WITH ENGINEER.
38. CUT AND CAP EX. SANITARY SEWER PIPE.
39. CUT AND CAP EX. STORM DRAIN PIPE.
40. EX. STORAGE SHED TO REMAIN.
41. REMOVE EX. IRRIGATION APPURTENANCES. CONTRACTOR SHALL REMOVE EX. GATE VALVE AND INSTALL BLIND FLANGE W/ CONC. THRUST BLOCK AT MAIN.
42. SEE ARCHITECTURAL PLANS FOR FLAG POLE REQUIREMENTS.
43. UNLESS DIRECTED OTHERWISE BY THE GEOTECHNICAL ENGINEER, PRESERVE AND PROTECT EXISTING GROUNDWATER MONITORING WELL. COORDINATE ANY ADJUSTMENTS/DECOMMISSIONING OF WELL WITH GEOTECHNICAL ENGINEER. EXISTING WELLS SHALL BE CLEARLY MARKED IN THE FIELD. COORDINATE DEMOLITION OF WELLS AS DIRECTED BY THE GEOTECHNICAL ENGINEER. EXISTING WELLS SHALL BE DECOMMISSIONED BY A WASHINGTON STATE LICENSED WELL DRILLER IN ACCORDANCE WITH STATE AND LOCAL STANDARDS AND WASHINGTON ADMINISTRATIVE CODE SECTION 173-160. DECOMMISSIONING REPORTS SHALL BE FILED WITH THE WASHINGTON STATE DEPARTMENT OF ECOLOGY AS REQUIRED AND IN A TIMELY MANNER. PROVIDE OWNER WITH COPIES OF ALL DECOMMISSIONING REPORTS.
44. REMOVE AND REPLACE EX. GATE/FENCE AS NECESSARY FOR UTILITY CONSTRUCTION.
45. REMOVE AND RELOCATE EX. FENCE AS NECESSARY FOR CURB AND PAVING CONSTRUCTION. COORDINATE FENCE LOCATION W/ ARCHITECT.

DEMOLITION LEGEND

DEMOLISH EX. ASPHALT/CONCRETE PAVEMENT

CLEARING LIMIT W/ ORANGE CONSTRUCTION FENCING AS REQUIRED.

SAWCUT

N

GRAPHIC SCALE
0 10 20 40 FEET
1" = 20 FEET

CALL 2 BUSINESS DAYS BEFORE YOU DIG 811 OR 1-800-424-5555

THESE DRAWINGS ARE NOT TO BE USED FOR CONSTRUCTION UNLESS SIGNED BY THE REVIEWING AGENCY

Integrity Works
Consulting Engineers, LLC
170 W. Dayton St. Suite 204 Edmonds WA 98020
O: 425.967.7913 C: 206.920.9410

Cornerstone
ARCHITECTURAL GROUP
6161 NE 175th Street, Suite 101
Kenmore, Washington 98028
Phone: 206.682.5000
cornerstonearch.com

© Cornerstone Architectural Group

JOSEPH B. MOON
STATE OF WASHINGTON
38972
PROFESSIONAL ENGINEER
04/04/16

CLARK ELEMENTARY SCHOOL
ISSAQUAH SCHOOL DISTRICT
400 1st AVE. SE
ISSAQUAH, WASHINGTON 98027

PERMIT SET

SHEET TITLE: DEMOLITION NOTES

DATE: 04-04-16 PROJECT NO: 191406

REVISIONS:

C4.03

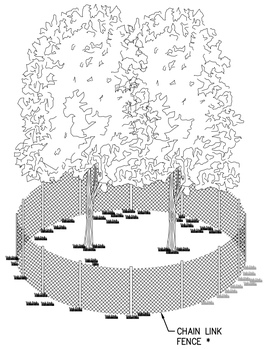

FENCING/ROOT PROTECTION
CHAINLINK FENCING TO BE PROVIDED AND MAINTAINED AT DRIPLINE (UNLESS OTHERWISE APPROVED BY THE ARBORIST).
ARBORIST'S APPROVAL REQUIRED FOR USE/ACCESS WITHIN ZONE B. PERMISSION FOR USE/ACCESS REQUIRES SURFACE PROTECTION FOR ALL UNFENCED, UNPAVED SURFACES WITHIN ZONE B.

*** SURFACE PROTECTION MEASURES**
1. MULCH LAYER, 6"–8"DEPTH
2. 3/4" PLYWOOD
3. STEEL PLATES

TRENCHING/EXCAVATION

ZONE A (CRITICAL ROOT ZONE)
1. NO DISTURBANCE ALLOWED WITHOUT SITE–SPECIFIC INSPECTION AND APPROVAL OF METHODS BY ARBORIST TO MINIMIZE ROOT DAMAGE.
2. SEVERANCE OF ROOTS LARGER THAN 2" DIA. REQUIRES ARBORIST'S APPROVAL.
3. TUNNELING REQUIRED TO INSTALL LINES 3'–0" BELOW GRADE OR DEEPER.

ZONE B (DRIPLINE)
1. OPERATION OF HEAVY EQUIPMENT AND/OR STOCKPILING OF MATERIALS SUBJECT TO ARBORIST'S APPROVAL. SURFACE PROTECTION* MEASURES REQUIRED.
2. LIMIT TRENCH WIDTH. DO NOT DISTURB.

ZONE C (FEEDER ROOT ZONE)
1. OPERATION OF HEAVY EQUIPMENT AND/OR STOCKPILING OF MATERIALS SUBJECT TO ARBORIST'S APPROVAL. SURFACE PROTECTION* MEASURES MAY BE REQUIRED.

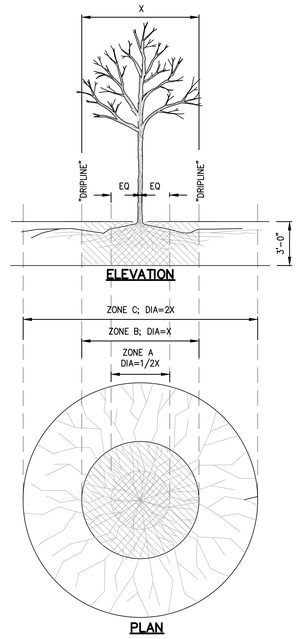

1 TREE PROTECTION DETAIL
NOT TO SCALE

2 NOT USED
NOT TO SCALE

3 NOT USED
NOT TO SCALE

4 NOT USED
NOT TO SCALE

Cornerstone
ARCHITECTURAL GROUP
6161 NE 175th Street, Suite 101
Kenmore, Washington 98028
Phone: 206.682.5000
cornerstonearch.com

© Cornerstone Architectural Group

JOSEPH B. MOON
STATE OF WASHINGTON
38972
PROFESSIONAL ENGINEER
04/04/16

CLARK ELEMENTARY SCHOOL
ISSAQUAH SCHOOL DISTRICT
400 1st AVE. SE
ISSAQUAH, WASHINGTON 98027

PERMIT SET

SHEET TITLE: DEMOLITION DETAILS

DATE: 04-04-16 PROJECT NO: 191406

REVISIONS:

811 CALL 2 BUSINESS DAYS BEFORE YOU DIG 811 OR 1-800-424-5555

THESE DRAWINGS ARE NOT TO BE USED FOR CONSTRUCTION UNLESS SIGNED BY THE REVIEWING AGENCY

Integrity Works
Consulting Engineers, LLC
170 W. Dayton St. Suite 204 Edmonds WA 98020
O: 425.967.7913 C: 206.920.9410

C4.04

SW1/4, NW1/4, SEC. 34, TWP. 24N, RGE 6E., W.M.

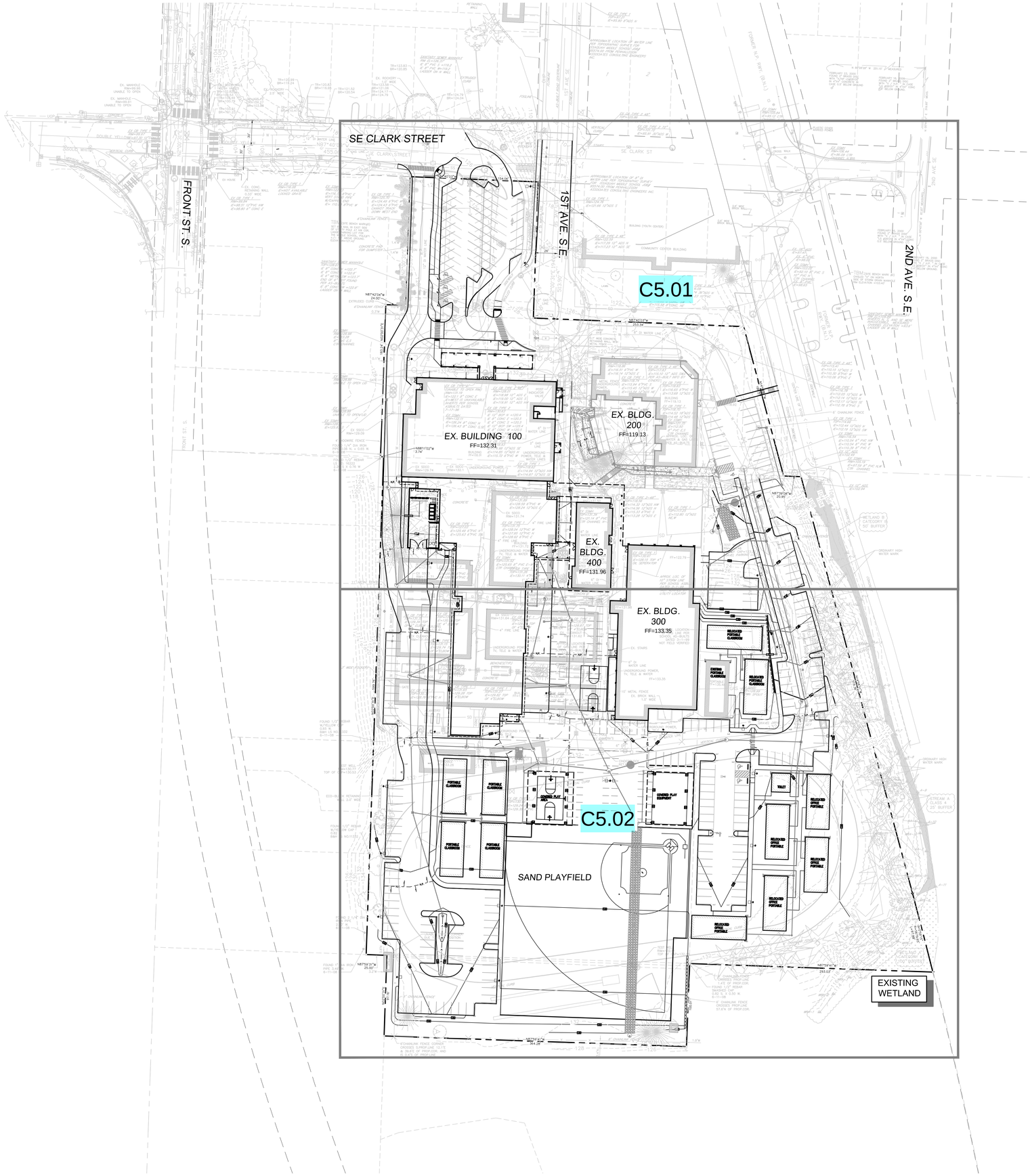

N

GRAPHIC SCALE
0 25 50 100 FEET
1" = 50 FEET

CALL 2 BUSINESS DAYS BEFORE YOU DIG 811 OR 1-800-424-5555

THESE DRAWINGS ARE NOT TO BE USED FOR CONSTRUCTION UNLESS SIGNED BY THE REVIEWING AGENCY

Integrity Works
Consulting Engineers, LLC
170 W. Dayton St. Suite 204 Edmonds WA 98020
O: 425.967.7913 C: 206.920.9410

Cornerstone
ARCHITECTURAL GROUP
6161 NE 175th Street, Suite 101
Kenmore, Washington 98028
Phone: 206.682.5000
cornerstonearch.com

© Cornerstone Architectural Group

JOSEPH B. MOON
STATE OF WASHINGTON
38972
PROFESSIONAL ENGINEER
04/04/16

CLARK ELEMENTARY SCHOOL
ISSAQUAH SCHOOL DISTRICT
400 1st AVE. SE
ISSAQUAH, WASHINGTON 98027

PERMIT SET

SHEET TITLE: GRADING OVERVIEW PLAN

DATE: 04-04-16 PROJECT NO: 191406

REVISIONS:

C5.00

SW1/4, NW1/4, SEC. 34, TWP. 24N, RGE 6E., W.M.

GRAPHIC SCALE
0 10 20 40 FEET
1" = 20 FEET

GRADING NOTES

1. CONTRACTOR SHALL OBTAIN ENGINEER'S APPROVAL OF SUBGRADE ELEVATIONS/GRADING PRIOR TO PAVING.
2. CONTRACTOR SHALL PROVIDE SMOOTH GRADING TRANSITIONS.
3. CONTRACTOR SHALL MAKE ADJUSTMENTS TO THE SUBGRADE ELEVATIONS AS DIRECTED BY THE ENGINEER AT NO ADDITIONAL COST TO THE OWNER.

CALL 2 BUSINESS DAYS BEFORE YOU DIG 811 OR 1-800-424-5555

THESE DRAWINGS ARE NOT TO BE USED FOR CONSTRUCTION UNLESS SIGNED BY THE REVIEWING AGENCY

Integrity Works
Consulting Engineers, LLC
170 W. Dayton St. Suite 204 Edmonds WA 98020
O: 425.967.7913 C: 206.920.9410

Cornerstone
ARCHITECTURAL GROUP
Phone: 206.682.5000
cornerstonearch.com
6161 NE 175th Street, Suite 101
Kenmore, Washington 98028

© Cornerstone Architectural Group

JOSEPH B. MOON
STATE OF WASHINGTON
38972
PROFESSIONAL ENGINEER
04/04/16

CLARK ELEMENTARY SCHOOL
ISSAQUAH SCHOOL DISTRICT
400 1st AVE. SE
ISSAQUAH, WASHINGTON 98027

PERMIT SET
SHEET TITLE: GRADING PLAN

PROJECT NO: 191406
DATE: 04-04-16
REVISIONS:

C5.01

MATCHLINE – SEE SHEET C5.01

SW1/4, NW1/4, SEC. 34, TWP. 24N, RGE 6E., W.M.

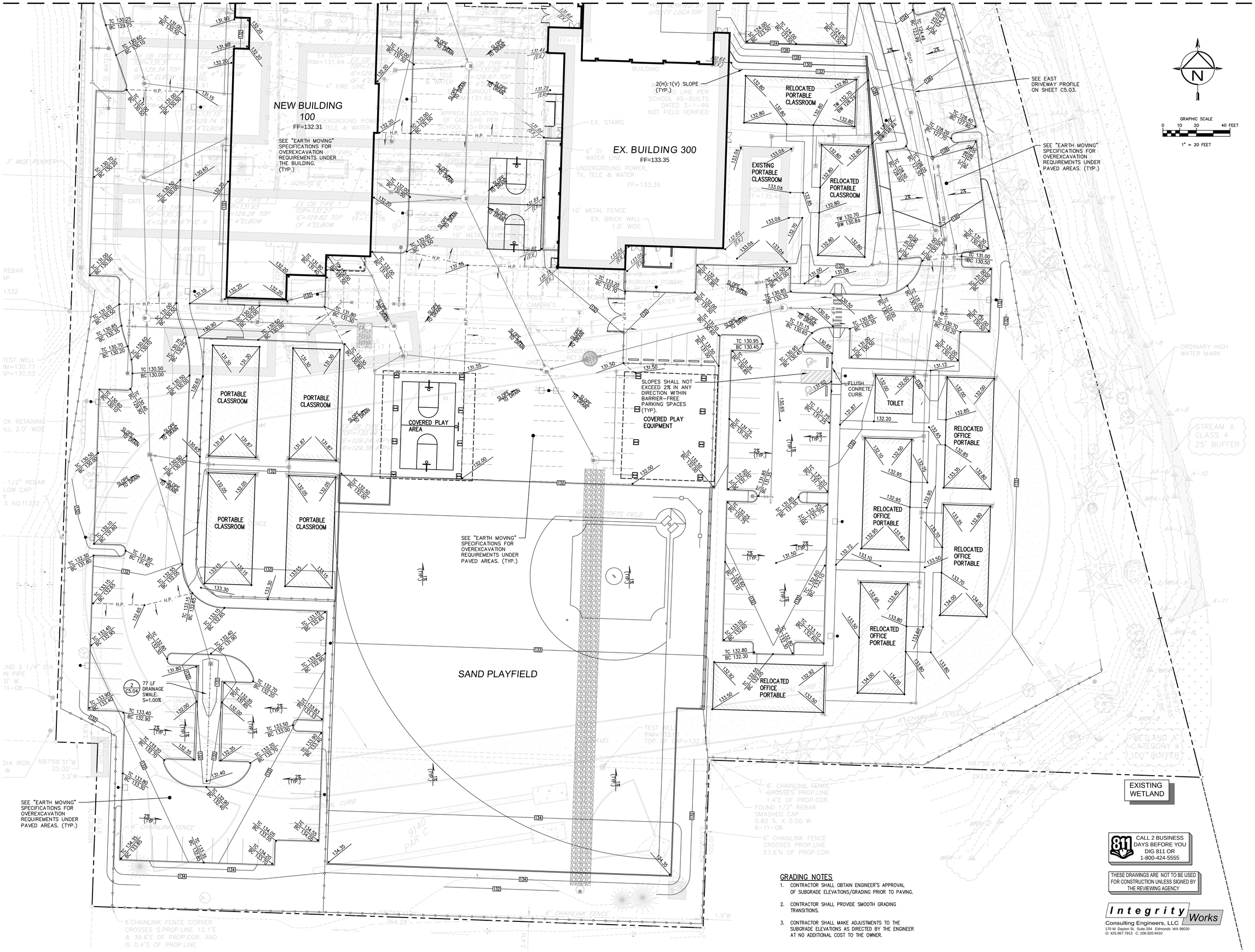

GRADING NOTES

1. CONTRACTOR SHALL OBTAIN ENGINEER'S APPROVAL OF SUBGRADE ELEVATIONS/GRADING PRIOR TO PAVING.
2. CONTRACTOR SHALL PROVIDE SMOOTH GRADING TRANSITIONS.
3. CONTRACTOR SHALL MAKE ADJUSTMENTS TO THE SUBGRADE ELEVATIONS AS DIRECTED BY THE ENGINEER AT NO ADDITIONAL COST TO THE OWNER.

811 CALL 2 BUSINESS DAYS BEFORE YOU DIG 811 OR 1-800-424-5555

THESE DRAWINGS ARE NOT TO BE USED FOR CONSTRUCTION UNLESS SIGNED BY THE REVIEWING AGENCY

Integrity Works
Consulting Engineers, LLC
170 W. Dayton St. Suite 204 Edmonds WA 98020
O: 425.967.7913 C: 206.920.9410

Cornerstone ARCHITECTURAL GROUP
6161 NE 175th Street, Suite 101
Kenmore, Washington 98028
Phone: 206.682.5000
cornerstonearch.com

© Cornerstone Architectural Group

JOSEPH B. MOON STATE OF WASHINGTON 38972 PROFESSIONAL ENGINEER
04/28/16

CLARK ELEMENTARY SCHOOL
ISSAQUAH SCHOOL DISTRICT
400 1st AVE. SE
ISSAQUAH, WASHINGTON 98027

PERMIT SET

SHEET TITLE: GRADING PLAN

DATE: 04-28-16 PROJECT NO: 191406

REVISIONS:

C5.02

SW1/4, NW1/4, SEC. 34, TWP. 24N, RGE 6E., W.M.

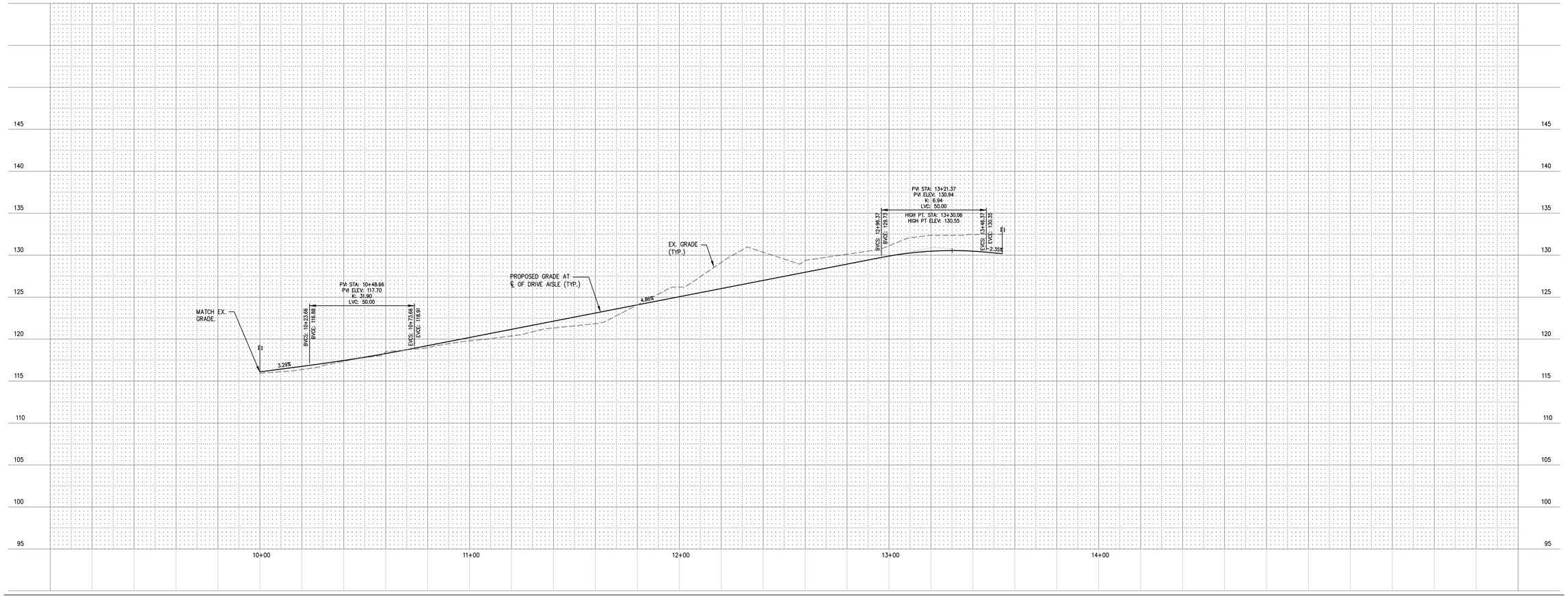

EAST DRIVEWAY PROFILE

SCALE: HOR. 1"=20'
VER. 1"=5'

CALL 2 BUSINESS DAYS BEFORE YOU DIG 811 OR 1-800-424-5555

THESE DRAWINGS ARE NOT TO BE USED FOR CONSTRUCTION UNLESS SIGNED BY THE REVIEWING AGENCY

Integrity Works
Consulting Engineers, LLC
170 W. Dayton St. Suite 204 Edmonds WA 98020
O: 425.967.7913 C: 206.920.9410

Cornerstone
ARCHITECTURAL GROUP
6161 NE 175th Street, Suite 101
Kenmore, Washington 98028
Phone: 206.652.5000
cornerstonearch.com

© Cornerstone Architectural Group

JOSEPH B. MOON
STATE OF WASHINGTON
38972
PROFESSIONAL ENGINEER
04/04/16

CLARK ELEMENTARY SCHOOL

ISSAQUAH SCHOOL DISTRICT
400 1st AVE. SE
ISSAQUAH, WASHINGTON 98027

PERMIT SET

SHEET TITLE: EAST DRIVEWAY PROFILE

DATE: 04-04-16 PROJECT NO: 191406

REVISIONS:

C5.03

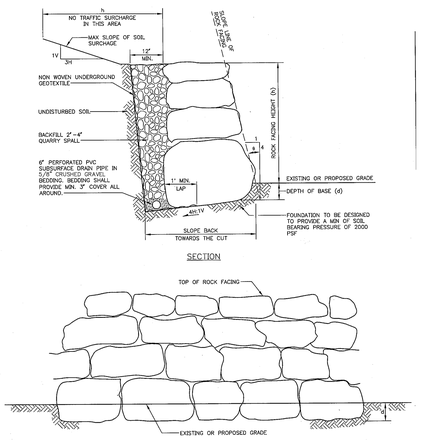

(h)	(d)	MINIMUM ROCK SIZE(BASE)	SIZE(TOP)
2 FEET	3 INCHES	2-MAN	1-MAN
4 FEET	6 INCHES	3-MAN	2-MAN
6 FEET	9 INCHES	4-MAN	2-MAN
8 FEET	12 INCHES	5-MAN	2-MAN

ϕ = 14° ±1°

1 ROCKERY WALL DETAIL
NOT TO SCALE

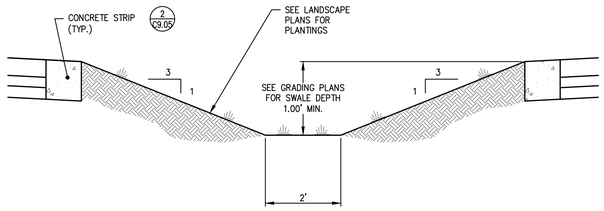

2 VEGETATED SWALE
NOT TO SCALE

3 NOT USED
NOT TO SCALE

4 NOT USED
NOT TO SCALE

5 NOT USED
NOT TO SCALE

6 NOT USED
NOT TO SCALE

THESE DRAWINGS ARE NOT TO BE USED FOR CONSTRUCTION UNLESS SIGNED BY THE REVIEWING AGENCY

811 CALL 2 BUSINESS DAYS BEFORE YOU DIG 811 OR 1-800-424-5555

Integrity Works
Consulting Engineers, LLC
170 W. Dayton St. Suite 204 Edmonds WA 98020
O: 425.967.7913 C: 206.920.9410

Cornerstone
ARCHITECTURAL GROUP
6161 NE 175th Street, Suite 101
Kenmore, Washington 98028
Phone: 206.682.5000
cornerstonearch.com

© Cornerstone Architectural Group

JOSEPH B. MOON
STATE OF WASHINGTON
38972
PROFESSIONAL ENGINEER
04/04/16

CLARK ELEMENTARY SCHOOL
ISSAQUAH SCHOOL DISTRICT
400 1st AVE. SE
ISSAQUAH, WASHINGTON 98027

PERMIT SET

SHEET TITLE: GRADING DETAILS

DATE: 04-04-16 PROJECT NO: 191406

REVISIONS:

C5.04

SW1/4, NW1/4, SEC. 34, TWP. 24N, RGE 6E., W.M.

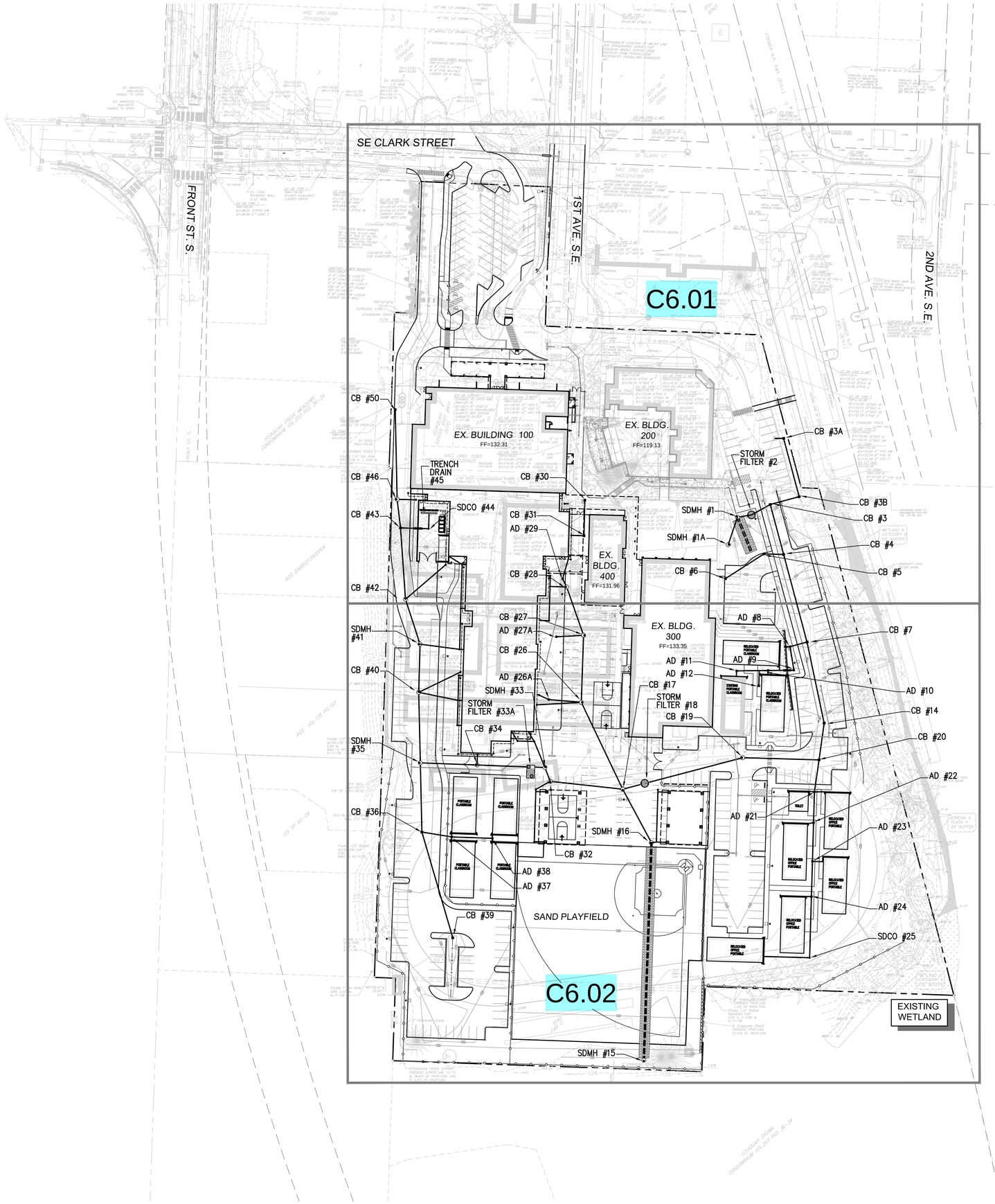

GRAPHIC SCALE
0 25 50 100 FEET
1" = 50 FEET

Cornerstone
ARCHITECTURAL GROUP
6161 NE 175th Street, Suite 101
Kenmore, Washington 98028
Phone: 206.682.5000
cornerstonearch.com

© Cornerstone Architectural Group

JOSEPH B. MOON
STATE OF WASHINGTON
38972
PROFESSIONAL ENGINEER
04/04/16

CLARK ELEMENTARY SCHOOL
ISSAQUAH SCHOOL DISTRICT
400 1st AVE. SE
ISSAQUAH, WASHINGTON 98027

CALL 2 BUSINESS DAYS BEFORE YOU DIG 811 OR 1-800-424-5555

THESE DRAWINGS ARE NOT TO BE USED FOR CONSTRUCTION UNLESS SIGNED BY THE REVIEWING AGENCY.

PERMIT SET

SHEET TITLE: STORM DRAINAGE OVERVIEW PLAN

DATE: 04-04-16 PROJECT NO: 191406

REVISIONS:

Integrity Works
Consulting Engineers, LLC
170 W. Dayton St. Suite 204 Edmonds WA 98020
O: 425.967.7913 C: 206.920.9410

C6.00

SW1/4, NW1/4, SEC. 34, TWP. 24N, RGE 6E., W.M.

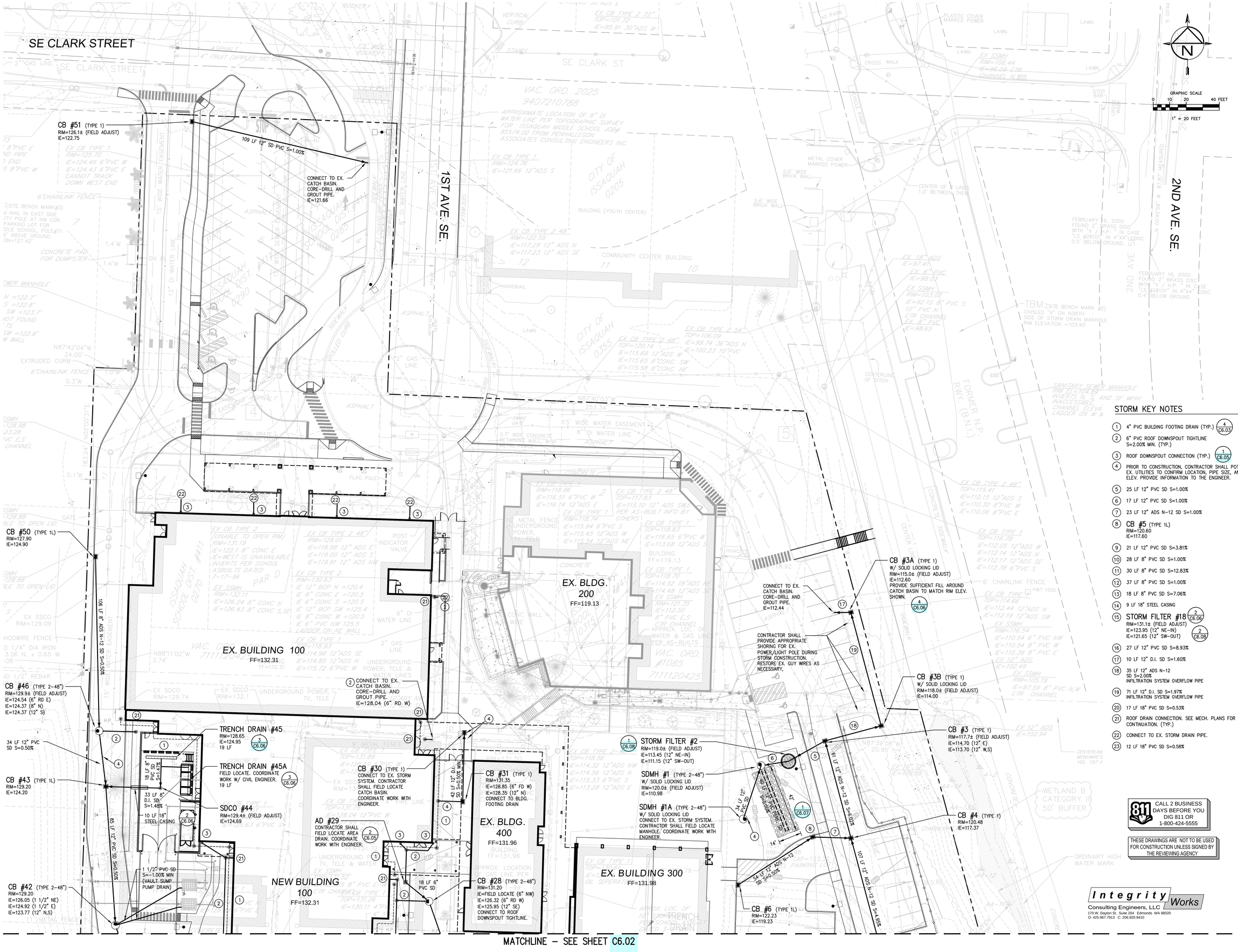

STORM KEY NOTES

1. 4" PVC BUILDING FOOTING DRAIN (TYP.) (4/C6.03)
2. 6" PVC ROOF DOWNSPOUT TIGHTLINE S=2.00% MIN. (TYP.)
3. ROOF DOWNSPOUT CONNECTION (TYP.) (1/C6.05)
4. PRIOR TO CONSTRUCTION, CONTRACTOR SHALL POTHOLE EX. UTILITIES TO CONFIRM LOCATION, PIPE SIZE, AND ELEV. PROVIDE INFORMATION TO THE ENGINEER.
5. 25 LF 12" PVC SD S=1.00%
6. 17 LF 12" PVC SD S=1.00%
7. 23 LF 12" ADS N-12 SD S=1.00%
8. CB #5 (TYPE 1L) RIM=120.60 IE=117.60
9. 21 LF 12" PVC SD S=3.81%
10. 28 LF 8" PVC SD S=1.00%
11. 30 LF 8" PVC SD S=12.83%
12. 37 LF 8" PVC SD S=1.00%
13. 18 LF 8" PVC SD S=7.06%
14. 9 LF 18" STEEL CASING
15. STORM FILTER #18 (2/C6.06) RIM=131.1± (FIELD ADJUST) IE=123.95 (12" NE-IN) IE=121.65 (12" SW-OUT) (2/C6.08)
16. 27 LF 12" PVC SD S=8.93%
17. 10 LF 12" D.I. SD S=1.60%
18. 35 LF 12" ADS N-12 SD S=2.00% INFILTRATION SYSTEM OVERFLOW PIPE
19. 71 LF 12" D.I. SD S=1.97% INFILTRATION SYSTEM OVERFLOW PIPE
20. 17 LF 18" PVC SD S=0.53%
21. ROOF DRAIN CONNECTION. SEE MECH. PLANS FOR CONTINUATION. (TYP.)
22. CONNECT TO EX. STORM DRAIN PIPE.
23. 12 LF 18" PVC SD S=0.58%

811 CALL 2 BUSINESS DAYS BEFORE YOU DIG 811 OR 1-800-424-5555

THESE DRAWINGS ARE NOT TO BE USED FOR CONSTRUCTION UNLESS SIGNED BY THE REVIEWING AGENCY

Integrity Works
Consulting Engineers, LLC
170 W. Dayton St. Suite 204 Edmonds WA 98020
O: 425.967.7913 C: 206.920.9410

Cornerstone ARCHITECTURAL GROUP
6161 NE 175th Street, Suite 101
Kenmore, Washington 98028
Phone: 206.682.5000
cornerstonearch.com

© Cornerstone Architectural Group

JOSEPH B. MOON STATE OF WASHINGTON 34972 PROFESSIONAL ENGINEER
04/28/16

CLARK ELEMENTARY SCHOOL
ISSAQUAH SCHOOL DISTRICT
400 1st AVE. SE
ISSAQUAH, WASHINGTON 98027

PERMIT SET

SHEET TITLE: STORM DRAINAGE PLAN

DATE: 04-28-16 PROJECT NO: 191406

REVISIONS:

C6.01

MATCHLINE – SEE SHEET C6.01

SW1/4, NW1/4, SEC. 34, TWP. 24N, RGE 6E., W.M.

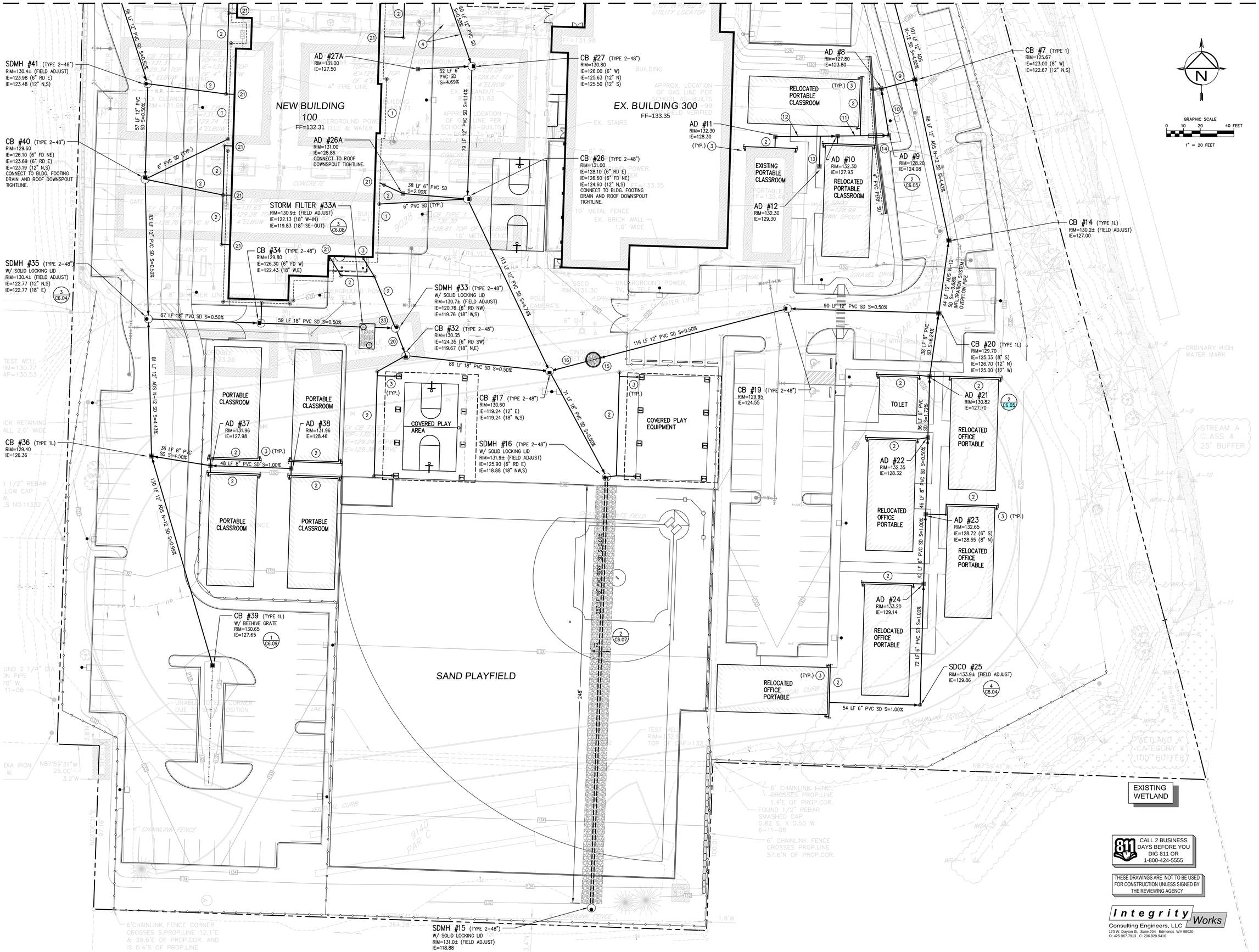

Cornerstone
ARCHITECTURAL GROUP
6161 NE 175th Street, Suite 101
Kenmore, Washington 98028
Phone: 206.682.5000
cornerstonearch.com

© Cornerstone Architectural Group

JOSEPH B. MOON
STATE OF WASHINGTON
38972
PROFESSIONAL ENGINEER
04/04/16

CLARK ELEMENTARY SCHOOL
ISSAQUAH SCHOOL DISTRICT
400 1st AVE. SE
ISSAQUAH, WASHINGTON 98027

PERMIT SET

SHEET TITLE: STORM DRAINAGE PLAN

DATE: 04-04-16 PROJECT NO: 191406

REVISIONS:

C6.02

811 CALL 2 BUSINESS DAYS BEFORE YOU DIG 811 OR 1-800-424-5555

THESE DRAWINGS ARE NOT TO BE USED FOR CONSTRUCTION UNLESS SIGNED BY THE REVIEWING AGENCY

Integrity Works
Consulting Engineers, LLC
170 W. Dayton St. Suite 204 Edmonds WA 98020
O: 425.967.7913 C: 206.920.9410

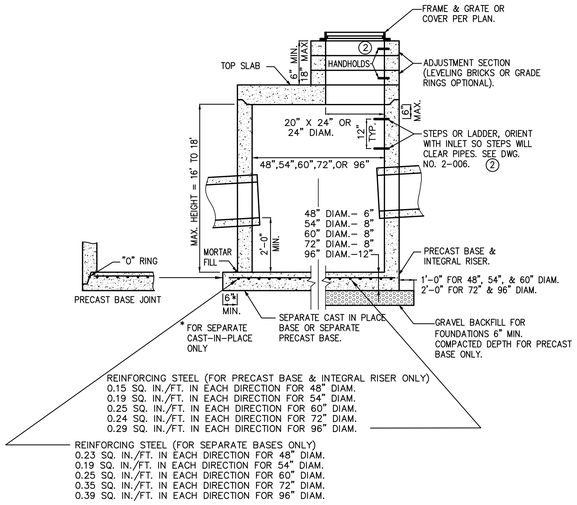

NOTES:

1. CATCH BASINS SHALL BE CONSTRUCTED IN ACCORDANCE WITH ASTM C478 (AASHTO M199) AND ASTM C890 UNLESS OTHERWISE SHOWN ON PLANS OR NOTED IN THE WSDOT/APWA STANDARD SPECIFICATIONS.
2. (2) HANDHOLDS IN ADJUSTMENT SECTION SHALL HAVE 3" MIN. CLEARANCE. STEPS IN CATCH BASIN SHALL HAVE 6" MIN. CLEARANCE. SEE FIG. NO. 7-006, CATCH BASIN DETAILS. HANDHOLDS SHALL BE PLACED IN ALTERNATING GRADE RINGS OR LEVELING BRICK COURSE WITH A MIN. OF ONE HANDHOLD BETWEEN THE LAST STEP AND TOP OF THE MANHOLE.
3. ALL REINFORCED CAST-IN-PLACE CONCRETE SHALL BE CLASS 4000. ALL PRECAST CONCRETE SHALL BE CLASS 4000.
4. PRECAST BASES SHALL BE FURNISHED WITH CUTOUTS OR KNOCKOUTS. KNOCKOUTS SHALL HAVE WALL THICKNESS OF 2 IN. MIN. UNUSED KNOCKOUTS NEED NOT BE GROUTED IF WALL IS LEFT INTACT. PIPES SHALL BE INSTALLED ONLY IN FACTORY KNOCKOUTS UNLESS OTHERWISE APPROVED BY THE ENGINEER.
5. KNOCKOUT OR CUTOUT HOLE SIZE SHALL EQUAL PIPE OUTER DIAM. PLUS CATCH BASIN WALL THICKNESS. MAX. HOLE SIZE SHALL BE 36 IN. FOR 48 IN. CATCH BASIN, 42 IN. FOR 54 IN. C.B., 48 IN. FOR 60 IN. C.B., 60 IN. FOR 72 IN. C.B., 84 IN. FOR 96 IN. C.B. MIN. DISTANCE BETWEEN HOLES SHALL BE 8 IN. FOR 48 IN., 54 IN. AND 60 IN. C.B.; 12 IN. FOR 72 IN. AND 96 IN. C.B.
6. CATCH BASIN FRAMES AND GRATES OR COVERS SHALL BE IN ACCORDANCE WITH SEC. 7.05 AND MEET THE STRENGTH REQUIREMENTS OF FEDERAL SPECIFICATION RR-F-621D. MATING SURFACES SHALL BE FINISHED TO ASSURE NON-ROCKING FIT WITH ANY COVER POSITION.
7. ALL BASE REINFORCING STEEL SHALL HAVE A MIN. YIELD STRENGTH OF 60,000 PSI AND BE PLACED IN THE UPPER HALF OF THE BASE WITH 1 IN. MIN. CLEARANCE.
8. MIN. SOIL BEARING VALUE SHALL EQUAL 3,300 POUNDS PER SQUARE FOOT.
9. FOR DETAILS SHOWING LADDER, STEPS, HANDRAILS AND TOP SLABS. SEE FIG. 7-006.
10. SEE THE WSDOT/APWA STANDARD SPECIFICATIONS SEC. 7-05.3 FOR JOINT REQUIREMENTS.

1 CATCH BASIN TYPE 2
NOT TO SCALE

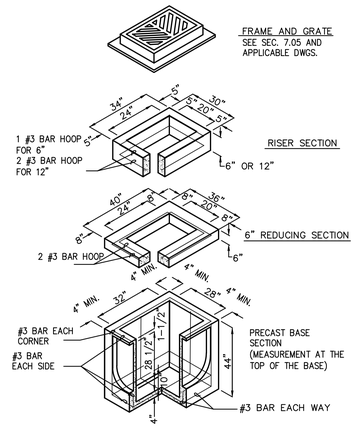

NOTES:

1. CATCH BASINS SHALL BE CONSTRUCTED IN ACCORDANCE WITH ASTM C478 (AASHTO M 199) & C890 UNLESS OTHERWISE SHOWN ON PLANS OR NOTED IN THE WSDOT/APWA STANDARD SPECIFICATIONS.
2. AS AN ACCEPTABLE ALTERNATIVE TO REBAR, WELDED WIRE FABRIC HAVING A MIN. AREA OF 0.12 SQUARE INCHES PER FOOT MAY BE USED. WELDED WIRE FABRIC SHALL COMPLY TO ASTM A497 (AASHTO M 221). WIRE FABRIC SHALL NOT BE PLACED IN KNOCKOUTS.
3. ALL REINFORCED CAST-IN-PLACE CONCRETE SHALL BE CLASS 4000.
4. PRECAST BASES SHALL BE FURNISHED WITH CUTOUTS OR KNOCKOUTS. KNOCKOUTS SHALL HAVE A WALL THICKNESS OF 2" MIN. ALL PIPE SHALL BE INSTALLED IN FACTORY PROVIDED KNOCKOUTS. UNUSED KNOCKOUTS NEED NOT BE GROUTED IF WALL IS LEFT INTACT.
5. KNOCKOUT OR CUTOUT HOLE SIZE IS EQUAL TO PIPE OUTER DIAM. PLUS CATCH BASIN WALL THICKNESS.
6. KNOCKOUTS MAY BE ON ALL 4 SIDES WITH MAX. DIAM. OF 28". KNOCKOUTS MAY BE EITHER ROUND OR "D" SHAPE.
7. THE TAPER ON THE SIDES OF THE PRECAST BASE SECTION AND RISER SECTION SHALL NOT EXCEED 1/2" PER FT.
8. CATCH BASIN FRAME AND GRATE SHALL BE IN ACCORDANCE WITH STANDARD SPECIFICATIONS AND MEET THE STRENGTH REQUIREMENTS OF FEDERAL SPECIFICATION RR-F-621D. MATING SURFACES SHALL BE FINISHED TO ASSURE NON-ROCKING FIT WITH ANY COVER POSITION.
9. FRAME AND GRATE MAY BE INSTALLED WITH FLANGE DOWN OR CAST INTO RISER.
10. MAX. DEPTH FROM FINISHED GRADE TO PIPE INVERT SHALL BE 5'-0".
11. EDGE OF REDUCING SECTION OR BRICK SHALL NOT BE MORE THAN 2" FROM VERTICAL EDGE OF CATCH BASIN WALL.

2 CATCH BASIN TYPE 1-L
NOT TO SCALE

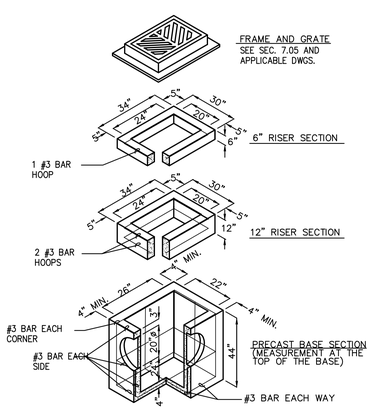

NOTES:

1. CATCH BASINS SHALL BE CONSTRUCTED IN ACCORDANCE WITH ASTM C478 (AASTO M 199) & C890 UNLESS OTHERWISE SHOWN ON PLANS OR NOTED IN THE WSDOT/APWA STANDARD SPECIFICATIONS.
2. AS AN ACCEPTABLE ALTERNATIVE TO REBAR, WELDED WIRE FABRIC HAVING A MIN. AREA OF 0.12 SQ. IN. PER FT. MAY BE USED. WELDED WIRE FABRIC SHALL COMPLY TO ASTM A497 (AASHTO M 221). WIRE FABRIC SHALL NOT BE PLACED IN KNOCKOUTS.
3. ALL REINFORCED CAST-IN-PLACE CONCRETE SHALL BE CLASS 4000.
4. PRECAST BASES SHALL BE FURNISHED WITH CUTOUTS OR KNOCKOUTS. KNOCKOUTS SHALL HAVE A WALL THICKNESS OF 2 IN. MIN. ALL PIPE SHALL BE INSTALLED IN FACTORY PROVIDED KNOCKOUTS. UNUSED KNOCKOUTS NEED NOT BE GROUTED IF WALL IS LEFT INTACT.
5. KNOCKOUT OR CUTOUT HOLE SIZE IS EQUAL TO PIPE OUTER DIAM. PLUS CATCH BASIN WALL THICKNESS.
6. ROUND KNOCKOUTS MAY BE ON ALL 4 SIDES, WITH MAX. DIAM. OF 20 IN. KNOCKOUTS MAY BE EITHER ROUND OR "D" SHAPE.
7. THE MAX. DEPTH FROM THE FINISHED GRADE TO THE PIPE INVERT IS 5 FT.
8. THE TAPER ON THE SIDES OF THE PRECAST BASE SECTION AND RISER SECTION SHALL NOT EXCEED 1/2" PER FT.
9. CATCH BASIN FRAME AND GRATE SHALL BE IN ACCORDANCE WITH STANDARD SPECIFICATIONS AND MEET THE STRENGTH REQUIREMENTS OF FEDERAL SPECIFICATION RR-F-621D. MATING SURFACES SHALL BE FINISHED TO ASSURE NON-ROCKING FIT WITH ANY COVER POSITION.
10. FRAME AND GRATE MAY BE INSTALLED WITH FLANGE DOWN OR CAST INTO RISER.
11. FOR CATCH BASINS IN PARKING LOTS REFER TO WSDOT/APWA STANDARD DWG. B1-b.
12. EDGE OF RISER OR BRICK SHALL NOT BE MORE THAN 2 IN. FROM VERTICAL EDGE OF CATCH BASIN WALL.

3 CATCH BASIN TYPE 1
NOT TO SCALE

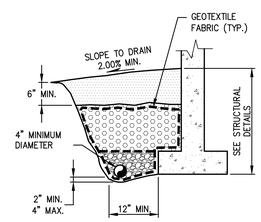

LEGEND

- SURFACE SEAL; NATIVE SOIL OR OTHER LOW PERMEABILITY MATERIAL.
- GRAVEL BACKFILL FOR WALLS; WSDOT STANDARD SPECIFICATIONS, SECTION 9-03.12(2).
- 6" MIN. COVER ON ALL SIDES WITH 3/4" WASHED PEA GRAVEL; WSDOT STANDARD SPECIFICATIONS, SECTION 9-03.12(4).
- FOUNDATION STRUCTURE
- DRAIN PIPE; PERFORATED RIGID PVC PIPE LAID WITH PERFORATIONS FACING DOWN; TIGHT JOINTED; WITH A POSITIVE GRADIENT CONNECTED TO CATCH BASIN. DO NOT USE FLEXIBLE CORRUGATED PLASTIC PIPE. DO NOT CONNECT BUILDING DOWNSPOUTS INTO FOOTING DRAIN.
- GEOTEXTILE FABRIC, MIRAFI 140N OR APPROVED EQUAL, WRAPPED ON ALL SIDES.

4 FOOTING DRAIN
NOT TO SCALE

THESE DRAWINGS ARE NOT TO BE USED FOR CONSTRUCTION UNLESS SIGNED BY THE REVIEWING AGENCY

811 CALL 2 BUSINESS DAYS BEFORE YOU DIG 811 OR 1-800-424-5555

Integrity Works
Consulting Engineers, LLC
170 W. Dayton St. Suite 204 Edmonds WA 98020
O: 425.967.7913 C: 206.920.9410

Cornerstone
ARCHITECTURAL GROUP
6161 NE 175th Street, Suite 101
Kenmore, Washington 98028
Phone: 206.682.5000
cornerstonearch.com

© Cornerstone Architectural Group

JOSEPH B. MOON
STATE OF WASHINGTON
38972
REGISTERED PROFESSIONAL ENGINEER
04/04/16

CLARK ELEMENTARY SCHOOL
ISSAQUAH SCHOOL DISTRICT
400 1st AVE. SE
ISSAQUAH, WASHINGTON 98027

PERMIT SET

SHEET TITLE: STORM DRAINAGE DETAILS

DATE: 04-04-16 PROJECT NO: 191406

REVISIONS:

C6.03

SW1/4, NW1/4, SEC. 34, TWP. 24N, RGE 6E., W.M.

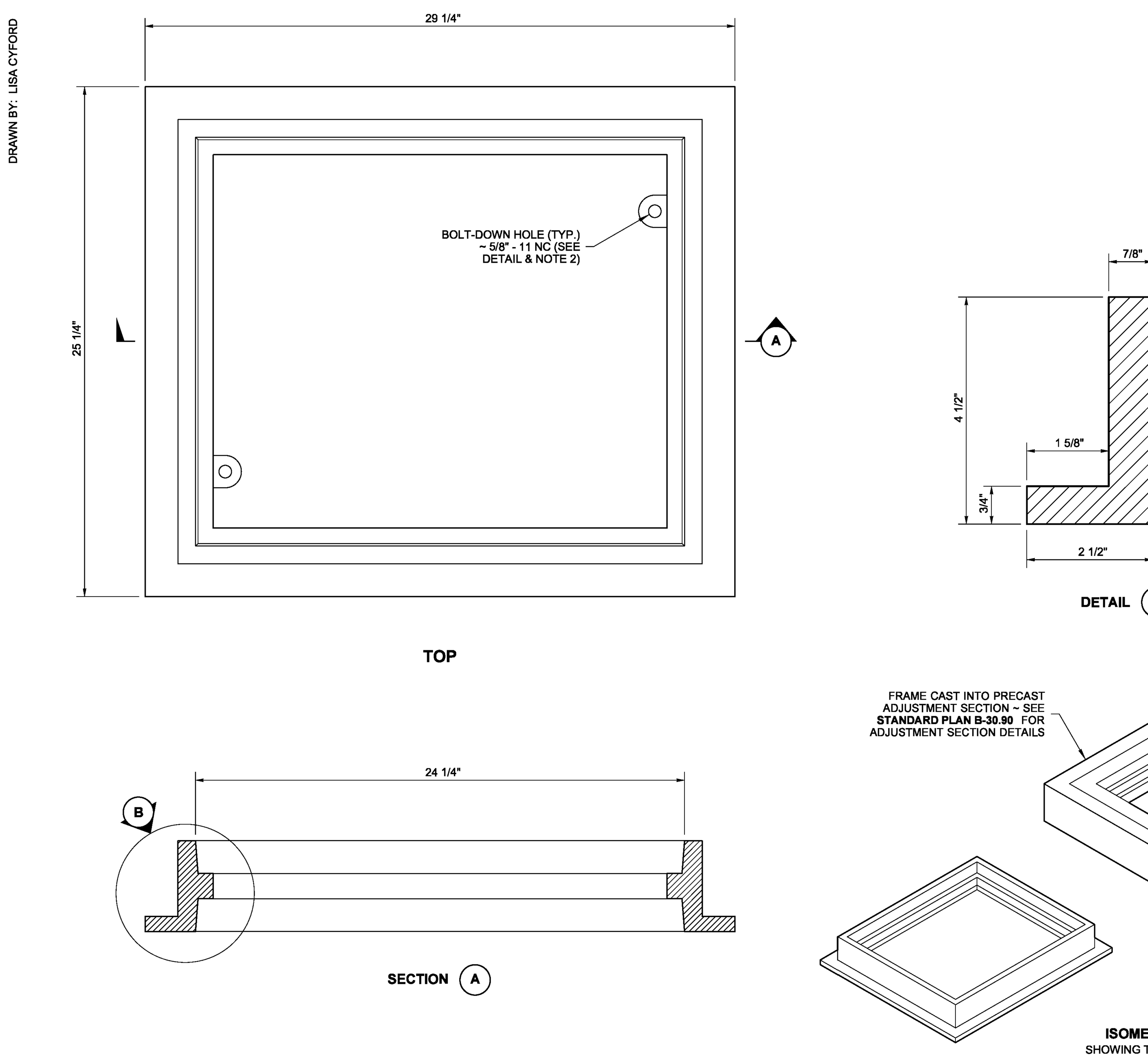

NOTES

1. This frame is designed to accommodate 20" × 24" grates or covers as shown on Standard Plans **B-30.20, B-30.30, B-30.40,** and **B-30.50**.
2. Bolt-down capability is required on all frames, grates, and covers, unless specified otherwise in the Contract. Provide 2 holes in the frame that are vertically aligned with the grate or cover slots. The frame shall accept the 5/8" - 11 NC × 2" Allen head cap screw by being tapped, or other approved mechanism. Location of bolt-down holes varies by manufacturer.
3. Refer to **Standard Specification 9-05.15(2)** for additional requirements.

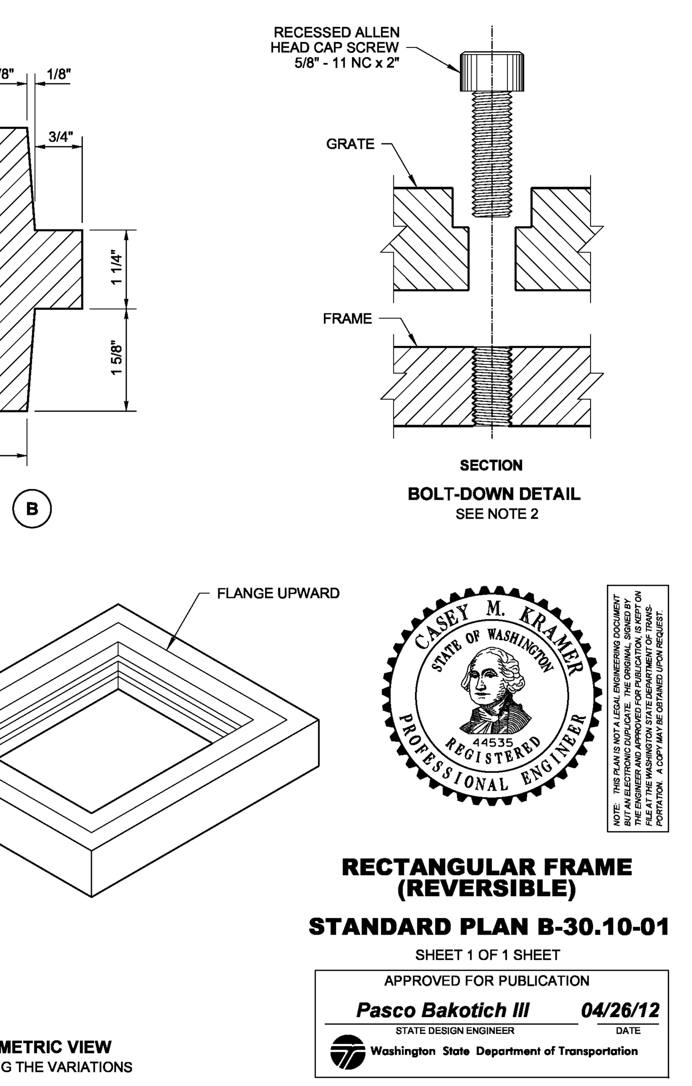

RECTANGULAR FRAME (REVERSIBLE)

STANDARD PLAN B-30.10-01

SHEET 1 OF 1 SHEET

APPROVED FOR PUBLICATION
Pasco Bakotich III 04/26/12
STATE DESIGN ENGINEER DATE
Washington State Department of Transportation

1 RETANGULAR FRAME
NOT TO SCALE

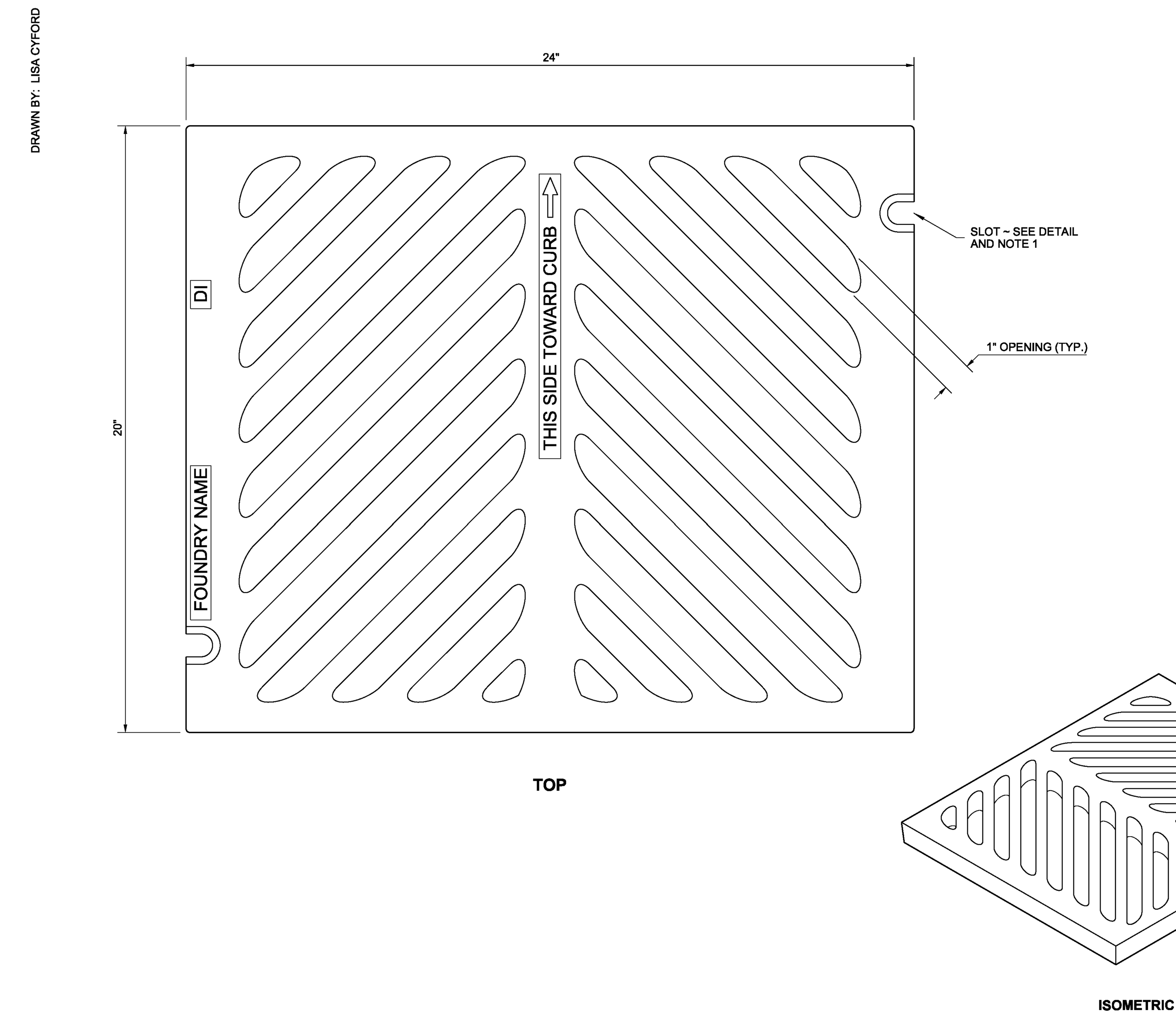

NOTES

1. Bolt-down capability is required on all frames, grates, and covers, unless specified otherwise in the Contract. Provide 2 holes in the frame that are vertically aligned with the grate or cover slots. The frame shall accept the 5/8" - 11 NC × 2" Allen head cap screw by being tapped, or other approved mechanism. Location of bolt-down holes varies by manufacturer.
2. Refer to **Standard Specification 9-05.15(2)** for additional requirements.
3. For frame details, see **Standard Plan B-30.10**.
4. The thickness of the grate shall not exceed 1 5/8".

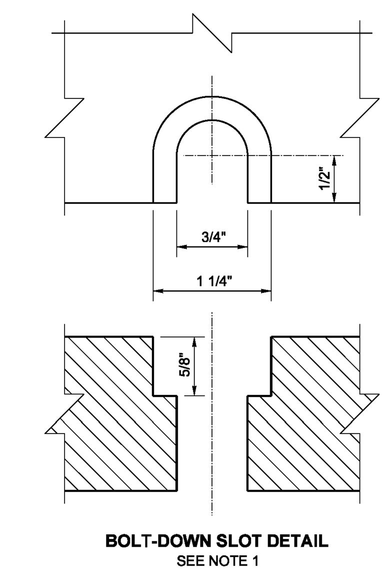

RECTANGULAR HERRINGBONE GRATE

STANDARD PLAN B-30.50-01

SHEET 1 OF 1 SHEET

APPROVED FOR PUBLICATION
Pasco Bakotich III 04/26/12
STATE DESIGN ENGINEER DATE
Washington State Department of Transportation

2 RETANGULAR HERRINGBONE GRATE
NOT TO SCALE

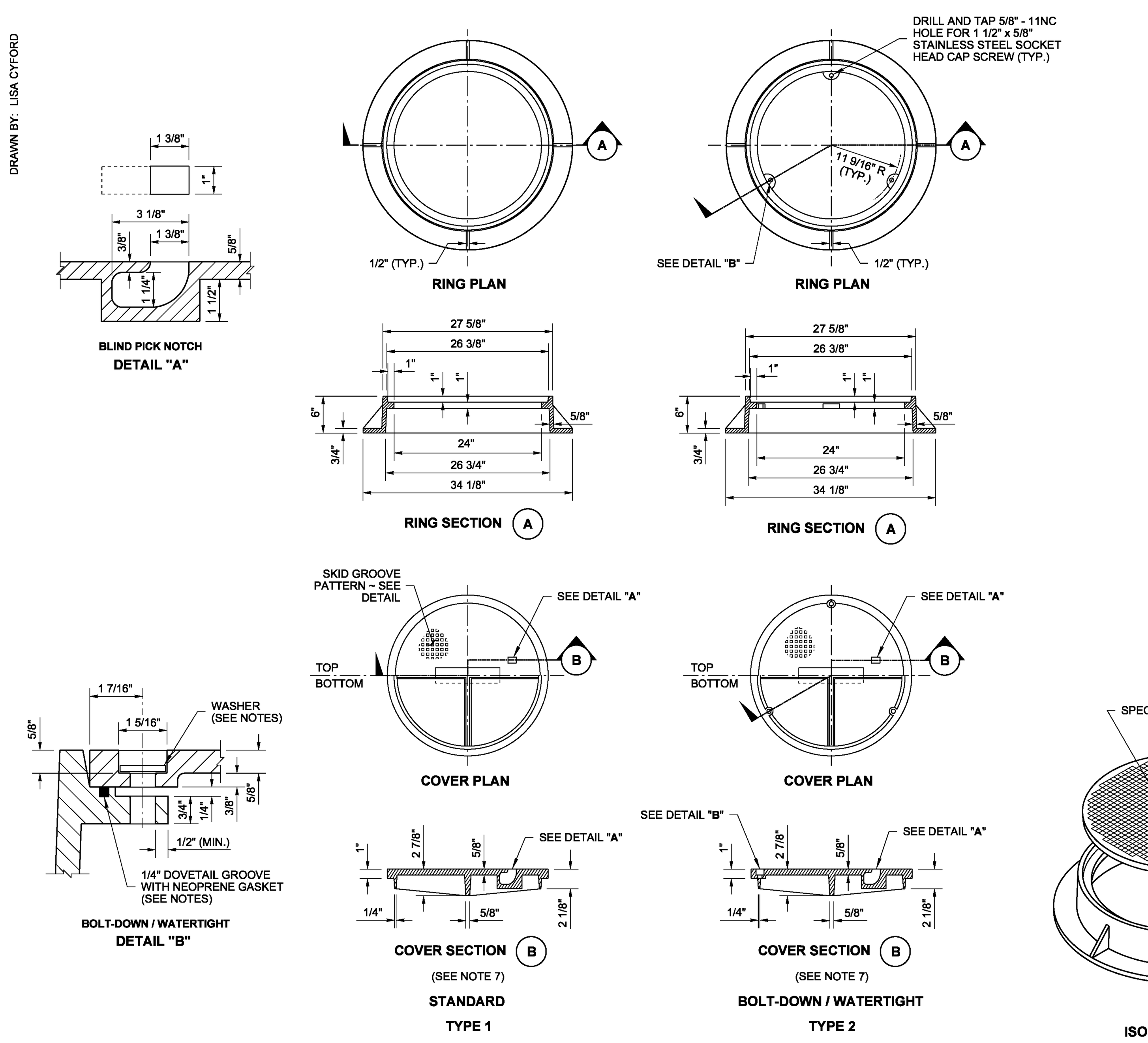

NOTES

1. The gasket and groove may be in the seat (frame) or in the underside of the cover. The gasket may be "T" shaped in section. The groove may be cast or machined.
2. Bolt-down capability is required on all frames, grates, and covers, unless specified otherwise in the Contract. Provide 3 holes in the frame that are vertically aligned with the grate or cover slots. The frame shall accept the 5/8" - 1 NC × 2" Allen head cap screw by being tapped, or other approved mechanism. Location of bolt down holes varies by manufacturer.
3. For bolt-down manhole ring and covers that are not designated "Watertight," the neoprene gasket, groove, and washer are not required.
4. Washer shall be neoprene (Detail "B").
5. In lieu of blind pick notch for manhole covers, a single 1" pick hole is acceptable. Hole location and number of holes may vary by manufacturer.
6. Alternative reinforcing designs are acceptable in lieu of the rib design.
7. For clarity, the vertical scale of the Cover Section has been exaggerated, it is 1.5 times the horizontal scale (1H:1.5V).

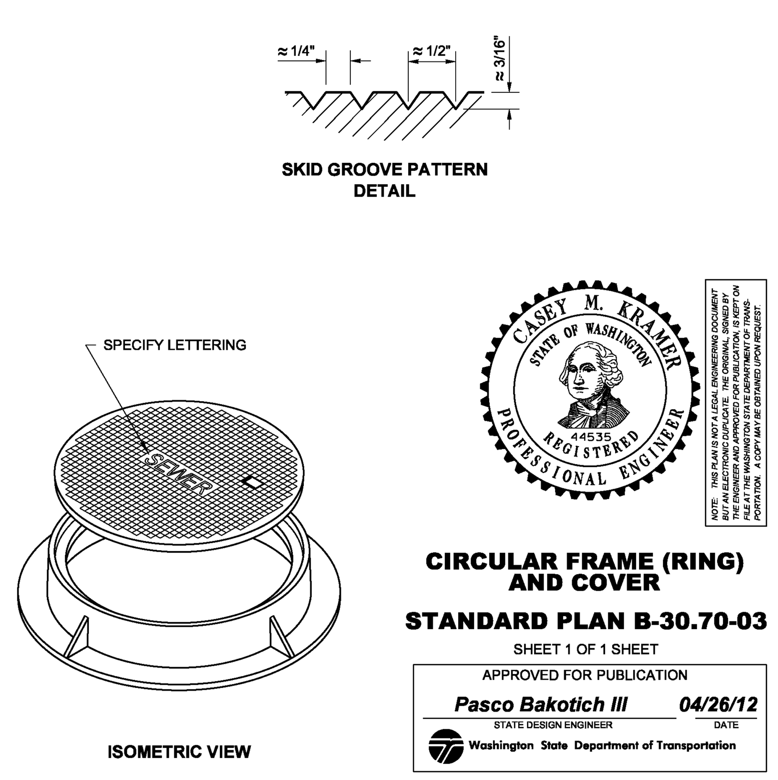

CIRCULAR FRAME (RING) AND COVER

STANDARD PLAN B-30.70-03

SHEET 1 OF 1 SHEET

APPROVED FOR PUBLICATION
Pasco Bakotich III 04/26/12
STATE DESIGN ENGINEER DATE
Washington State Department of Transportation

3 CIRCULAR FRAME AND COVER
NOT TO SCALE

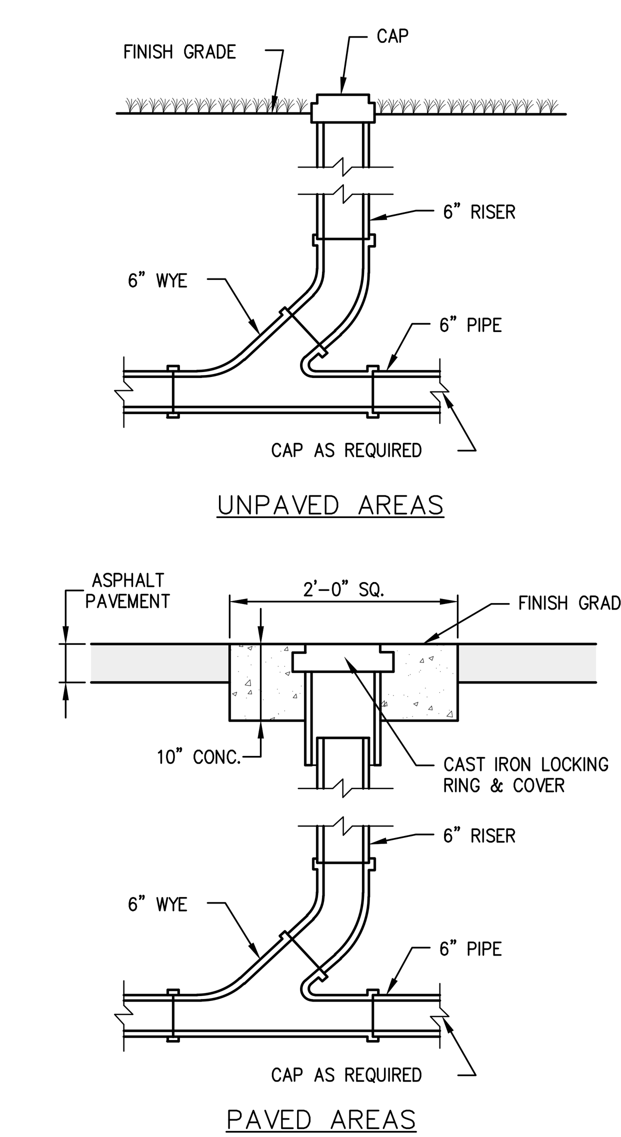

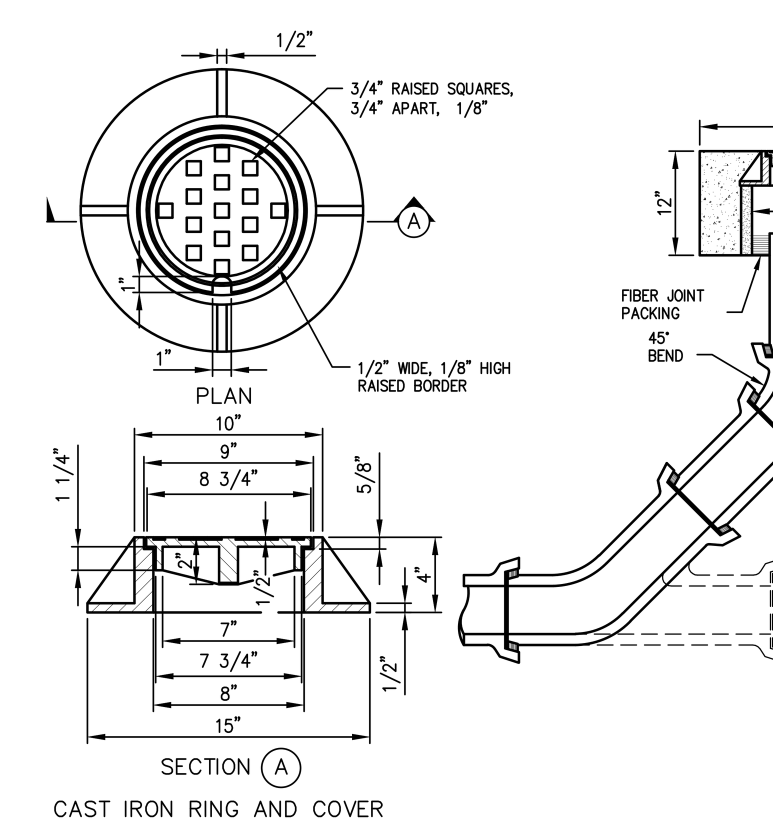

4 CLEANOUT
NOT TO SCALE

THESE DRAWINGS ARE NOT TO BE USED FOR CONSTRUCTION UNLESS SIGNED BY THE REVIEWING AGENCY

811 CALL 2 BUSINESS DAYS BEFORE YOU DIG 811 OR 1-800-424-5555

Integrity Works
Consulting Engineers, LLC
170 W. Dayton St. Suite 204 Edmonds WA 98020
O: 425.967.7913 C: 206.920.9410

Cornerstone
ARCHITECTURAL GROUP
6161 NE 175th Street, Suite 101
Kenmore, Washington 98028
Phone: 206.682.5000
cornerstonearch.com

© Cornerstone Architectural Group

JOSEPH B. MOON
STATE OF WASHINGTON
36922
REGISTERED
PROFESSIONAL ENGINEER
04/04/16

CLARK ELEMENTARY SCHOOL
ISSAQUAH SCHOOL DISTRICT
400 1st AVE. SE
ISSAQUAH, WASHINGTON 98027

PERMIT SET

SHEET TITLE: STORM DRAINAGE DETAILS

DATE: 04-04-16
PROJECT NO: 191406
REVISIONS:

C6.04

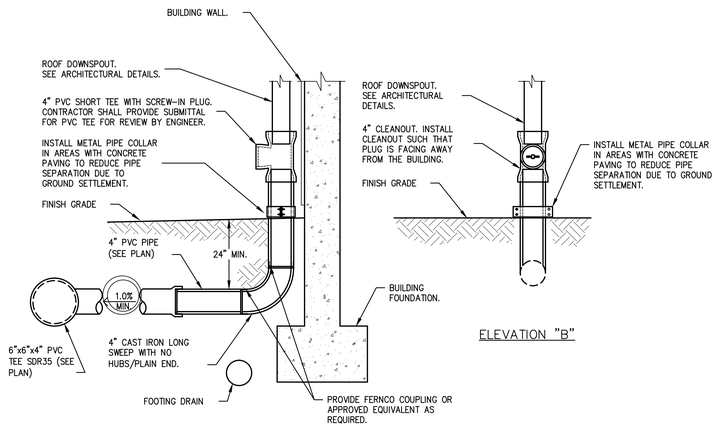

1 ROOF DOWNSPOUT CONNECTION
NOT TO SCALE

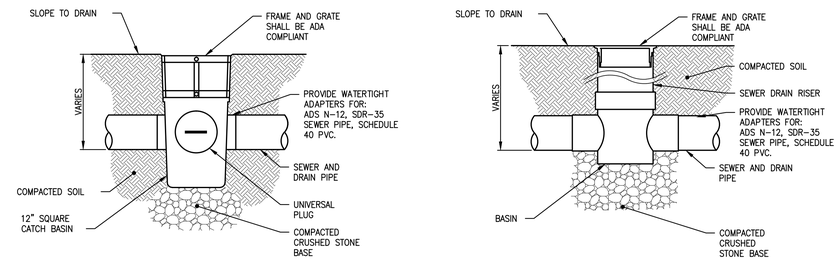

NOTE:

1. CONTRACTOR SHALL PROVIDE AREA DRAIN SUBMITTAL FOR REVIEW AND APPROVAL BY THE ENGINEER AND LANDSCAPE ARCHITECT.

SQUARE BASIN

NOTE:

1. CONTRACTOR SHALL PROVIDE AREA DRAIN SUBMITTAL FOR REVIEW AND APPROVAL BY THE ENGINEER AND LANDSCAPE ARCHITECT.

ROUND BASIN

2 AREA DRAIN
NOT TO SCALE

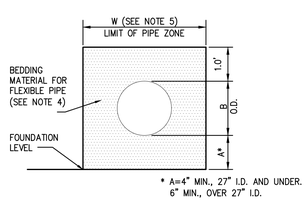

BEDDING FOR FLEXIBLE PIPE

FLEXIBLE PIPE NOTES:

1. PROVIDE UNIFORM SUPPORT UNDER BARRELS.
2. HAND TAMP UNDER HAUNCHES.
3. COMPACT BEDDING MATERIAL TO 95% MAX. DENSITY. HAND TAMP ONLY DIRECTLY OVER PIPE.
4. PIPE BEDDING FOR FLEXIBLE PIPE SHALL CONSIST OF 3/4" CRUSHED GRAVEL PER WSDOT SPEC. SECTION 9-03.12(3).
5. SEE "EXCAVATION AND PREPARATION OF TRENCH" IN STORM SEWERS SECTION OF THE STANDARD WSDOT/APWA SPECIFICATIONS FOR TRENCH WIDTH "W" AND TRENCHING OPTIONS. THE PIPE ZONE SHALL BE THE ACTUAL TRENCH WIDTH. THE MINIMUM TRENCH WIDTH SHALL BE 1-1/2 I.D. + 18".

PIPE	SIZE	MIN. DIST. BETWEEN BARRELS
CIRCULAR PIPE CONCRETE, LCPE, CMP (DIAMETER)	8" TO 24"	12"

3 PIPE BEDDING
NOT TO SCALE

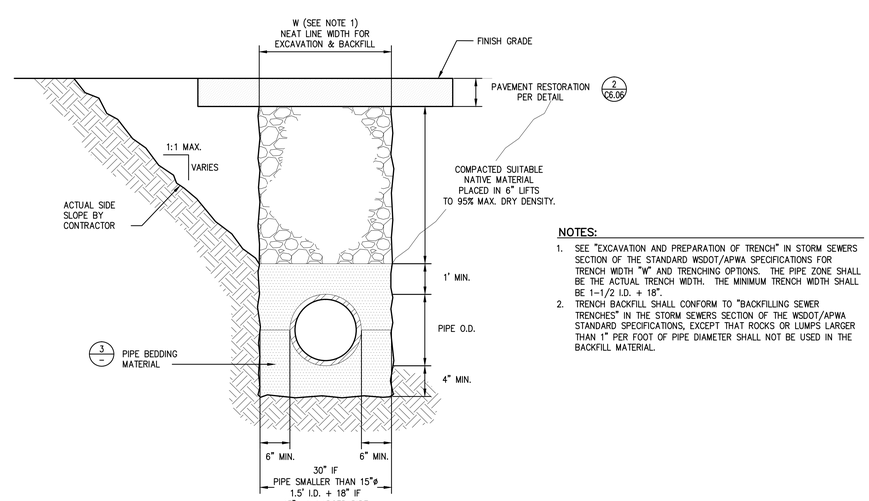

NOTES:

1. SEE "EXCAVATION AND PREPARATION OF TRENCH" IN STORM SEWERS SECTION OF THE STANDARD WSDOT/APWA SPECIFICATIONS FOR TRENCH WIDTH "W" AND TRENCHING OPTIONS. THE PIPE ZONE SHALL BE THE ACTUAL TRENCH WIDTH. THE MINIMUM TRENCH WIDTH SHALL BE 1-1/2 I.D. + 18".
2. TRENCH BACKFILL SHALL CONFORM TO "BACKFILLING SEWER TRENCHES" IN THE STORM SEWERS SECTION OF THE WSDOT/APWA STANDARD SPECIFICATIONS, EXCEPT THAT ROCKS OR LUMPS LARGER THAN 1" PER FOOT OF PIPE DIAMETER SHALL NOT BE USED IN THE BACKFILL MATERIAL.

4 PIPE TRENCH
NOT TO SCALE

THESE DRAWINGS ARE NOT TO BE USED FOR CONSTRUCTION UNLESS SIGNED BY THE REVIEWING AGENCY

811 CALL 2 BUSINESS DAYS BEFORE YOU DIG 811 OR 1-800-424-5555

Integrity Works
Consulting Engineers, LLC
170 W. Dayton St. Suite 204 Edmonds WA 98020
O: 425.967.7913 C: 206.920.9410

Cornerstone
ARCHITECTURAL GROUP
6161 NE 175th Street, Suite 101
Kenmore, Washington 98028
Phone: 206.682.5000
cornerstonearch.com

© Cornerstone Architectural Group

JOSEPH B. MOON
STATE OF WASHINGTON
38972
PROFESSIONAL ENGINEER
04/04/16

CLARK ELEMENTARY SCHOOL
ISSAQUAH SCHOOL DISTRICT
400 1st AVE. SE
ISSAQUAH, WASHINGTON 98027

PERMIT SET

SHEET TITLE: STORM DRAINAGE DETAILS

DATE: 04-04-16 PROJECT NO: 191406

REVISIONS:

C6.05

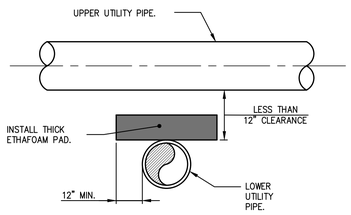

1 ETHAFOAM INSTALLATION
NOT TO SCALE

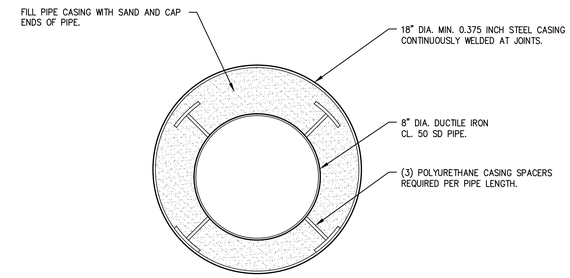

2 PIPE CASING DETAIL
NOT TO SCALE

MultiDrain®
We Drain Your Site, Not Your Budget!

MULTIDRAIN SYSTEMS, INC.
1405 INDUSTRIAL DRIVE
STATESVILLE, NC 28625
TOLL FREE: 1-800-433-1119
PHONE: (704) 508-1010
FAX: (704) 508-1011
www.multidrainsystems.com

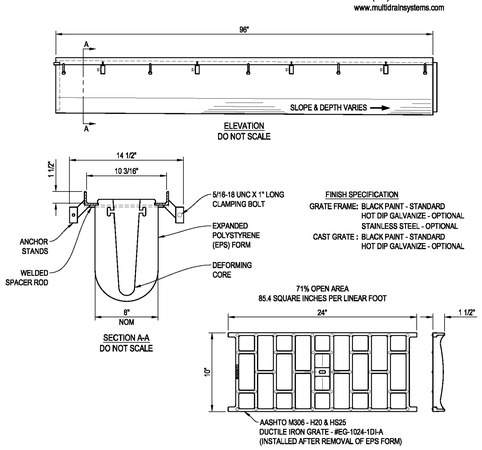

FINISH SPECIFICATION
GRATE FRAME: BLACK PAINT - STANDARD
HOT DIP GALVANIZE - OPTIONAL
STAINLESS STEEL - OPTIONAL
CAST GRATE : BLACK PAINT - STANDARD
HOT DIP GALVANIZE - OPTIONAL

71% OPEN AREA
85.4 SQUARE INCHES PER LINEAR FOOT

NOTES:
1. INSTALLATION TO BE COMPLETED IN ACCORDANCE WITH MANUFACTURERS SPECIFICATIONS.
2. DO NOT SCALE DRAWINGS.

EconoDrain® Series #8
SLOTTED DUCTILE IRON GRATE (STANDARD)

CSI-ED-0896-1DI-A-02 Copyright © 2007 MultiDrain Systems, Inc. www.multidrainsystems.com

MultiDrain®
We Drain Your Site, Not Your Budget!

MULTIDRAIN SYSTEMS, INC.
1405 INDUSTRIAL DRIVE
STATESVILLE, NC 28625
TOLL FREE: 1-800-433-1119
PHONE: (704) 508-1010
FAX: (704) 508-1011
www.multidrainsystems.com

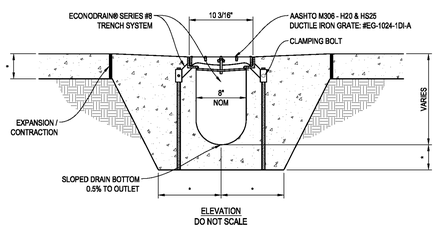

NOTES TO THE SPECIFIER:
1. ADD REBAR AS REQUIRED
2. SPECIFY REQUIRED DIMENSIONS (LABELED WITH *)
3. SHOW TOP OF GRATE ELEVATION IN PLAN VIEW
4. EXPANSION / CONTRACTION JOINT PER LOCAL ENGINEERING REGULATIONS AND GUIDELINES
5. STANDARD CHANNEL LENGTH IS 8'-0" (98")
6. STANDARD CHANNEL SLOPE IS 0.5%

FINISH SPECIFICATION
GRATE FRAME: BLACK PAINT - STANDARD
HOT DIP GALVANIZE - OPTIONAL
STAINLESS STEEL - OPTIONAL
CAST GRATE : BLACK PAINT - STANDARD
HOT DIP GALVANIZE - OPTIONAL

NOTES:
1. INSTALLATION TO BE COMPLETED IN ACCORDANCE WITH MANUFACTURERS SPECIFICATIONS.
2. DO NOT SCALE DRAWINGS.

EconoDrain® Series #8
MONOLITHIC POUR INSTALLATION DETAIL

CSI-INST-M-ED-0896-1DI-A-03 Copyright © 2007 MultiDrain Systems, Inc. www.multidrainsystems.com

3 TRENCH DRAIN DETAIL
NOT TO SCALE

DRAWN BY: LISA CYFORD

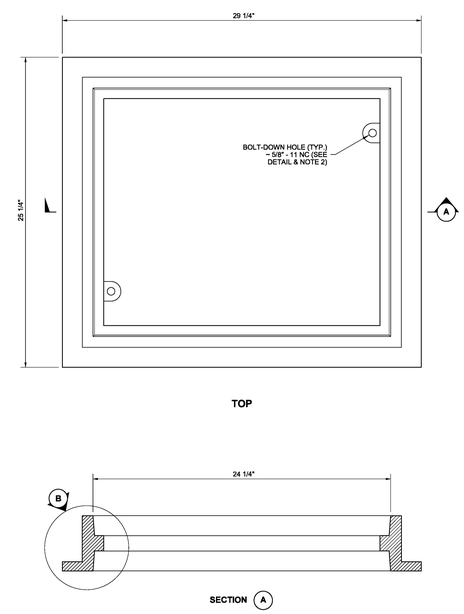

NOTES

1. This frame is designed to accommodate 20" × 24" grates or covers as shown on Standard Plans **B-30.20, B-30.30, B-30.40,** and **B-30.50**.
2. Bolt-down capability is required on all frames, grates, and covers, unless specified otherwise in the Contract. Provide 2 holes in the frame that are vertically aligned with the grate or cover slots. The frame shall accept the 5/8" - 11 NC × 2" Allen head cap screw by being tapped, or other approved mechanism. Location of bolt-down holes varies by manufacturer.
3. Refer to **Standard Specification 9-05.15(2)** for additional requirements.

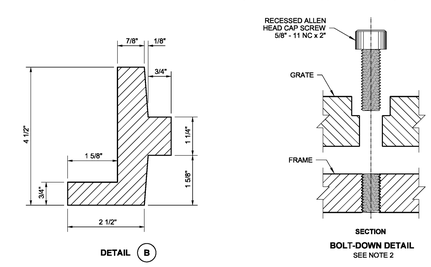

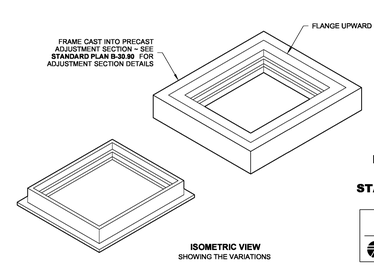

CASEY M. KRAMER
STATE OF WASHINGTON
24453
REGISTERED PROFESSIONAL ENGINEER

RECTANGULAR FRAME (REVERSIBLE)

STANDARD PLAN B-30.10-01

SHEET 1 OF 1 SHEET

APPROVED FOR PUBLICATION
Pasco Bakotich III *04/26/12*
STATE DESIGN ENGINEER DATE
Washington State Department of Transportation

4 RECTANGULAR SOLID METAL COVER
NOT TO SCALE

THESE DRAWINGS ARE NOT TO BE USED FOR CONSTRUCTION UNLESS SIGNED BY THE REVIEWING AGENCY

811 CALL 2 BUSINESS DAYS BEFORE YOU DIG 811 OR 1-800-424-5555

Integrity Works
Consulting Engineers, LLC
170 W. Dayton St. Suite 204 Edmonds WA 98020
O: 425.967.7913 C: 206.920.9410

Cornerstone
ARCHITECTURAL GROUP
6161 NE 175th Street, Suite 101
Kenmore, Washington 98028
Phone: 206.682.5000
cornerstonearch.com

© Cornerstone Architectural Group

JOSEPH B. MOON
STATE OF WASHINGTON
38972
REGISTERED PROFESSIONAL ENGINEER
04/04/16

CLARK ELEMENTARY SCHOOL
ISSAQUAH SCHOOL DISTRICT
400 1st AVE. SE
ISSAQUAH, WASHINGTON 98027

PERMIT SET

SHEET TITLE: STORM DRAINAGE DETAILS

DATE: 04-04-16 PROJECT NO: 191406

REVISIONS:

C6.06

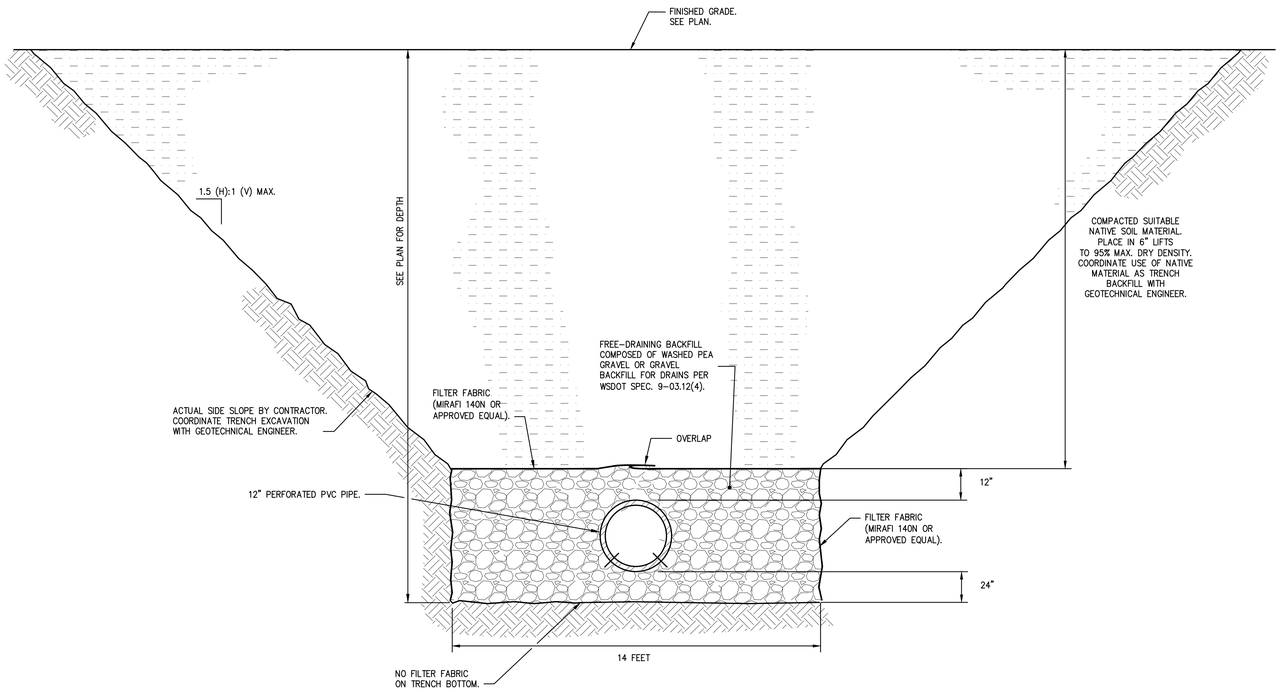

1 INFILTRATION TRENCH (EAST)
NOT TO SCALE

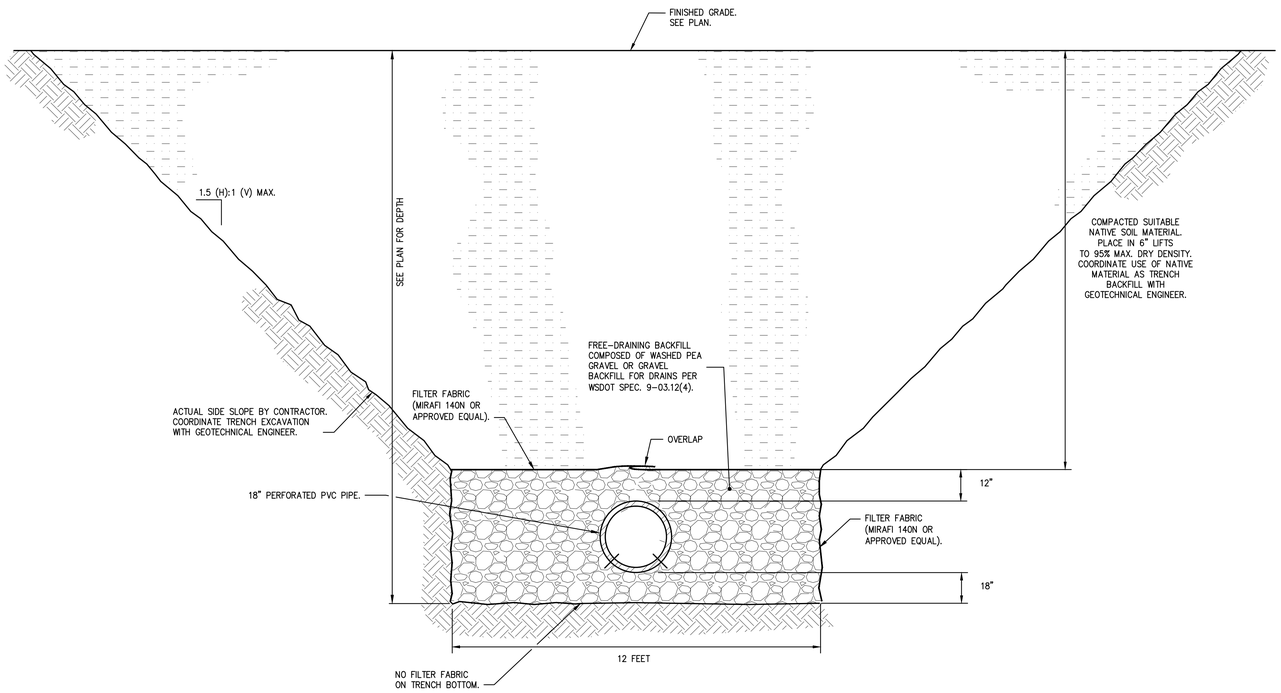

2 INFILTRATION TRENCH (SOUTH)
NOT TO SCALE

THESE DRAWINGS ARE NOT TO BE USED FOR CONSTRUCTION UNLESS SIGNED BY THE REVIEWING AGENCY

811 CALL 2 BUSINESS DAYS BEFORE YOU DIG 811 OR 1-800-424-5555

Integrity Works
Consulting Engineers, LLC
170 W. Dayton St. Suite 204 Edmonds WA 98020
O: 425.967.7913 C: 206.920.9410

Cornerstone
ARCHITECTURAL GROUP
6161 NE 175th Street, Suite 101
Kenmore, Washington 98028
Phone: 206.682.5000
cornerstonearch.com

© Cornerstone Architectural Group

JOSEPH B. MOORE
STATE OF WASHINGTON
38972
PROFESSIONAL ENGINEER
04/04/16

CLARK ELEMENTARY SCHOOL
ISSAQUAH SCHOOL DISTRICT
400 1st AVE. SE
ISSAQUAH, WASHINGTON 98027

PERMIT SET

SHEET TITLE: STORM DRAINAGE DETAILS

DATE: 04-04-16 PROJECT NO: 191406

REVISIONS:

C6.07

1 STORM FILTER VAULT #2
NOT TO SCALE

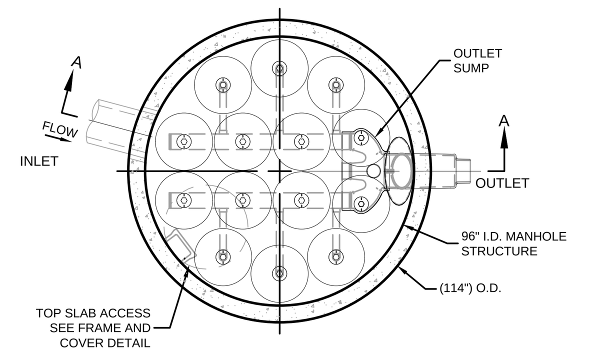

PLAN VIEW
STANDARD OUTLET RISER
FLOWKIT: 43A

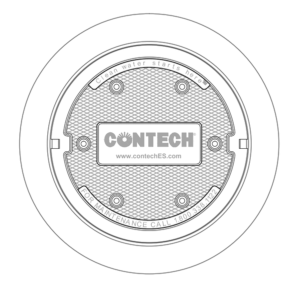

FRAME AND COVER
(DIAMETER VARIES)
N.T.S.

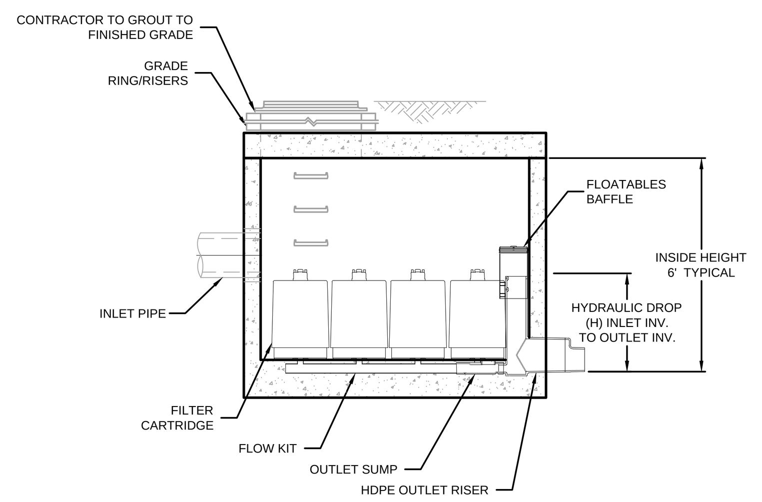

SECTION A-A

STORMFILTER DESIGN NOTES

STORMFILTER TREATMENTCAPACITY IS A FUNCTION OF THE CARTRIDGE SELECTION AND THE NUMBER OF CARTRIDGES. THE STANDARD MANHOLE STYLE IS SHOWN WITH THE MAXIMUM NUMBER OF CARTRIDGES (14). VOLUME SYSTEM IS ALSO AVAILABLE WITH MAXIMUM 14 CARTRIDGES. Ø96" MANHOLE STORMFILTER PEAK HYDRAULIC CAPACITY IS 1.8 CFS. IF THE SITE CONDITIONS EXCEED 1.8 CFS AN UPSTREAM BYPASS STRUCTURE IS REQUIRED.

CARTRIDGE SELECTION

CARTRIDGE HEIGHT	27"		18"		LOW DROP	
RECOMMENDED HYDRAULIC DROP (H)	3.05'		2.3'		1.8'	
SPECIFIC FLOW RATE (gpm/sf)	2 gpm/ft²	1 gpm/ft²	2 gpm/ft²	1 gpm/ft²	2 gpm/ft²	1 gpm/ft²
CARTRIDGE FLOW RATE (gpm)	22.5	11.25	15	7.5	10	5

SITE SPECIFIC DATA REQUIREMENTS

STRUCTURE ID			2
WATER QUALITY FLOW RATE (cfs)			0.14
PEAK FLOW RATE (cfs)			0.71
RETURN PERIOD OF PEAK FLOW (yrs)			100
# OF CARTRIDGES REQUIRED			9
CARTRIDGE FLOW RATE			*
MEDIA TYPE (CSF, PERLITE, ZPG, GAC, PHS)			ZPG
PIPE DATA:	I.E.	MATERIAL	DIAMETER
INLET PIPE #1	113.45	PVC	12"
INLET PIPE #2	*	*	*
OUTLET PIPE	111.15	PVC	12"
RIM ELEVATION			119.0±
ANTI-FLOTATION BALLAST		WIDTH	HEIGHT
		*	*
NOTES/SPECIAL REQUIREMENTS:			
* PER ENGINEER OF RECORD			

GENERAL NOTES
1. CONTECH TO PROVIDE ALL MATERIALS UNLESS NOTED OTHERWISE.
2. DIMENSIONS MARKED WITH ( ) ARE REFERENCE DIMENSIONS. ACTUAL DIMENSIONS MAY VARY.
3. FOR SITE SPECIFIC DRAWINGS WITH DETAILED VAULT DIMENSIONS AND WEIGHTS, PLEASE CONTACT YOUR CONTECH ENGINEERED SOLUTIONS LLC REPRESENTATIVE. www.ContechES.com
4. STORMFILTER WATER QUALITY STRUCTURE SHALL BE IN ACCORDANCE WITH ALL DESIGN DATA AND INFORMATION CONTAINED IN THIS DRAWING.
5. STRUCTURE SHALL MEET AASHTO HS20 LOAD RATING, ASSUMING EARTH COVER OF 0' - 5' AND GROUNDWATER ELEVATION AT, OR BELOW, THE OUTLET PIPE INVERT ELEVATION. ENGINEER OF RECORD TO CONFIRM ACTUAL GROUNDWATER ELEVATION. CASTINGS SHALL MEET AASHTO M306 AND BE CAST WITH THE CONTECH LOGO.
6. FILTER CARTRIDGES SHALL BE MEDIA-FILLED, PASSIVE, SIPHON ACTUATED, RADIAL FLOW, AND SELF CLEANING. RADIAL MEDIA DEPTH SHALL BE 7-INCHES. FILTER MEDIA CONTACT TIME SHALL BE AT LEAST 39 SECONDS.
7. SPECIFIC FLOW RATE IS EQUAL TO THE FILTER TREATMENT CAPACITY (gpm) DIVIDED BY THE FILTER CONTACT SURFACE AREA (sq ft).

INSTALLATION NOTES
1. ANY SUB-BASE, BACKFILL DEPTH, AND/OR ANTI-FLOTATION PROVISIONS ARE SITE-SPECIFIC DESIGN CONSIDERATIONS AND SHALL BE SPECIFIED BY ENGINEER OF RECORD.
2. CONTRACTOR TO PROVIDE EQUIPMENT WITH SUFFICIENT LIFTING AND REACH CAPACITY TO LIFT AND SET THE STORMFILTER STRUCTURE (LIFTING CLUTCHES PROVIDED).
3. CONTRACTOR TO INSTALL JOINT SEALANT BETWEEN ALL STRUCTURE SECTIONS AND ASSEMBLE STRUCTURE.
4. CONTRACTOR TO PROVIDE, INSTALL, AND GROUT INLET PIPE(S).
5. CONTRACTOR TO PROVIDE AND INSTALL CONNECTOR TO THE OUTLET RISER STUB. STORMFILTER EQUIPPED WITH A DUAL DIAMETER HDPE OUTLET STUB AND SAND COLLAR. IF OUTLET PIPE IS LARGER THAN 8 INCHES, CONTRACTOR TO REMOVE THE 8 INCH OUTLET STUB AT MOLDED IN CUT LINE. COUPLING BY FERNCO OR EQUAL AND PROVIDED BY CONTRACTOR.
6. CONTRACTOR TO TAKE APPROPRIATE MEASURES TO PROTECT CARTRIDGES FROM CONSTRUCTION-RELATED EROSION RUNOFF.

CONTECH ENGINEERED SOLUTIONS LLC
www.ContechES.com
9025 Centre Pointe Dr., Suite 400, West Chester, OH 45069
800-338-1122 513-645-7000 513-645-7993 FAX

SFMH96
STORMFILTER
STANDARD DETAIL

P:\PROJECTS\15104\CAD\CLARK ES\15104-ST DETAILS-CONTEC.DWG 4/4/2016 6:53 AM

2 STORM FILTER VAULT #18
NOT TO SCALE

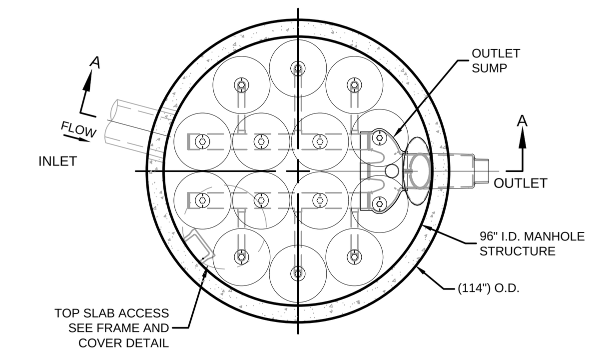

PLAN VIEW
STANDARD OUTLET RISER
FLOWKIT: 43A

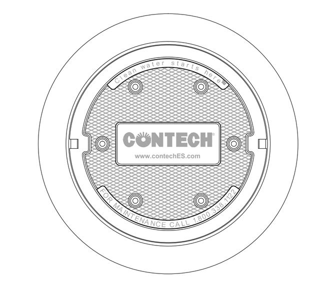

FRAME AND COVER
(DIAMETER VARIES)
N.T.S.

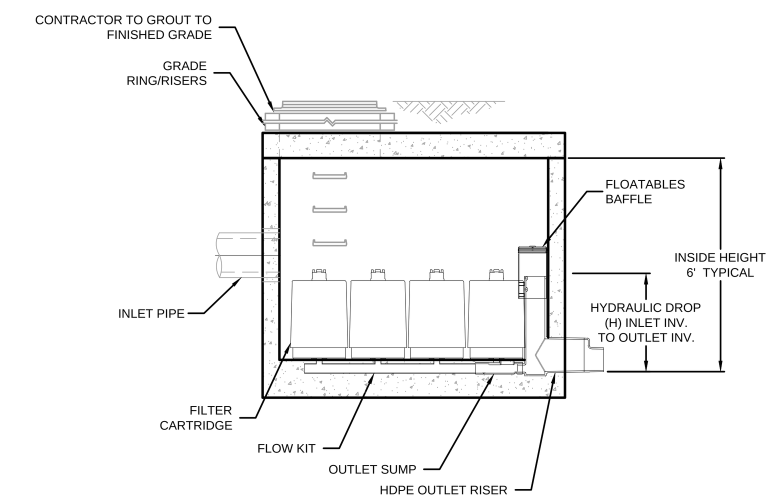

SECTION A-A

STORMFILTER DESIGN NOTES

STORMFILTER TREATMENTCAPACITY IS A FUNCTION OF THE CARTRIDGE SELECTION AND THE NUMBER OF CARTRIDGES. THE STANDARD MANHOLE STYLE IS SHOWN WITH THE MAXIMUM NUMBER OF CARTRIDGES (14). VOLUME SYSTEM IS ALSO AVAILABLE WITH MAXIMUM 14 CARTRIDGES. Ø96" MANHOLE STORMFILTER PEAK HYDRAULIC CAPACITY IS 1.8 CFS. IF THE SITE CONDITIONS EXCEED 1.8 CFS AN UPSTREAM BYPASS STRUCTURE IS REQUIRED.

CARTRIDGE SELECTION

CARTRIDGE HEIGHT	27"		18"		LOW DROP	
RECOMMENDED HYDRAULIC DROP (H)	3.05'		2.3'		1.8'	
SPECIFIC FLOW RATE (gpm/sf)	2 gpm/ft²	1 gpm/ft²	2 gpm/ft²	1 gpm/ft²	2 gpm/ft²	1 gpm/ft²
CARTRIDGE FLOW RATE (gpm)	22.5	11.25	15	7.5	10	5

SITE SPECIFIC DATA REQUIREMENTS

STRUCTURE ID			18
WATER QUALITY FLOW RATE (cfs)			0.19
PEAK FLOW RATE (cfs)			1.04
RETURN PERIOD OF PEAK FLOW (yrs)			100
# OF CARTRIDGES REQUIRED			12
CARTRIDGE FLOW RATE			*
MEDIA TYPE (CSF, PERLITE, ZPG, GAC, PHS)			ZPG
PIPE DATA:	I.E.	MATERIAL	DIAMETER
INLET PIPE #1	123.95	PVC	12"
INLET PIPE #2	*	*	*
OUTLET PIPE	121.65	PVC	12"
RIM ELEVATION			131.1±
ANTI-FLOTATION BALLAST		WIDTH	HEIGHT
		*	*
NOTES/SPECIAL REQUIREMENTS:			
* PER ENGINEER OF RECORD			

GENERAL NOTES
1. CONTECH TO PROVIDE ALL MATERIALS UNLESS NOTED OTHERWISE.
2. DIMENSIONS MARKED WITH ( ) ARE REFERENCE DIMENSIONS. ACTUAL DIMENSIONS MAY VARY.
3. FOR SITE SPECIFIC DRAWINGS WITH DETAILED VAULT DIMENSIONS AND WEIGHTS, PLEASE CONTACT YOUR CONTECH ENGINEERED SOLUTIONS LLC REPRESENTATIVE. www.ContechES.com
4. STORMFILTER WATER QUALITY STRUCTURE SHALL BE IN ACCORDANCE WITH ALL DESIGN DATA AND INFORMATION CONTAINED IN THIS DRAWING.
5. STRUCTURE SHALL MEET AASHTO HS20 LOAD RATING, ASSUMING EARTH COVER OF 0' - 5' AND GROUNDWATER ELEVATION AT, OR BELOW, THE OUTLET PIPE INVERT ELEVATION. ENGINEER OF RECORD TO CONFIRM ACTUAL GROUNDWATER ELEVATION. CASTINGS SHALL MEET AASHTO M306 AND BE CAST WITH THE CONTECH LOGO.
6. FILTER CARTRIDGES SHALL BE MEDIA-FILLED, PASSIVE, SIPHON ACTUATED, RADIAL FLOW, AND SELF CLEANING. RADIAL MEDIA DEPTH SHALL BE 7-INCHES. FILTER MEDIA CONTACT TIME SHALL BE AT LEAST 39 SECONDS.
7. SPECIFIC FLOW RATE IS EQUAL TO THE FILTER TREATMENT CAPACITY (gpm) DIVIDED BY THE FILTER CONTACT SURFACE AREA (sq ft).

INSTALLATION NOTES
1. ANY SUB-BASE, BACKFILL DEPTH, AND/OR ANTI-FLOTATION PROVISIONS ARE SITE-SPECIFIC DESIGN CONSIDERATIONS AND SHALL BE SPECIFIED BY ENGINEER OF RECORD.
2. CONTRACTOR TO PROVIDE EQUIPMENT WITH SUFFICIENT LIFTING AND REACH CAPACITY TO LIFT AND SET THE STORMFILTER STRUCTURE (LIFTING CLUTCHES PROVIDED).
3. CONTRACTOR TO INSTALL JOINT SEALANT BETWEEN ALL STRUCTURE SECTIONS AND ASSEMBLE STRUCTURE.
4. CONTRACTOR TO PROVIDE, INSTALL, AND GROUT INLET PIPE(S).
5. CONTRACTOR TO PROVIDE AND INSTALL CONNECTOR TO THE OUTLET RISER STUB. STORMFILTER EQUIPPED WITH A DUAL DIAMETER HDPE OUTLET STUB AND SAND COLLAR. IF OUTLET PIPE IS LARGER THAN 8 INCHES, CONTRACTOR TO REMOVE THE 8 INCH OUTLET STUB AT MOLDED IN CUT LINE. COUPLING BY FERNCO OR EQUAL AND PROVIDED BY CONTRACTOR.
6. CONTRACTOR TO TAKE APPROPRIATE MEASURES TO PROTECT CARTRIDGES FROM CONSTRUCTION-RELATED EROSION RUNOFF.

CONTECH ENGINEERED SOLUTIONS LLC
www.ContechES.com
9025 Centre Pointe Dr., Suite 400, West Chester, OH 45069
800-338-1122 513-645-7000 513-645-7993 FAX

SFMH96
STORMFILTER
STANDARD DETAIL

P:\PROJECTS\15104\CAD\CLARK ES\15104-ST DETAILS-CONTEC.DWG 4/4/2016 6:53 AM

3 STORM FILTER VAULT #33A
NOT TO SCALE

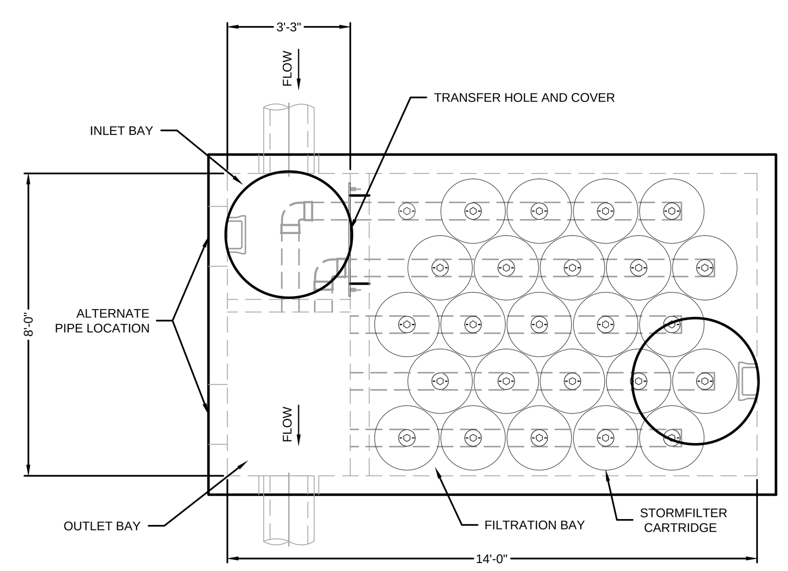

PLAN

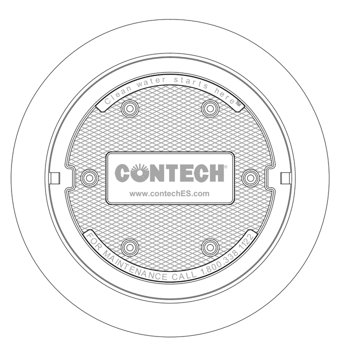

FRAME AND COVER
(DIAMETER VARIES)
N.T.S.

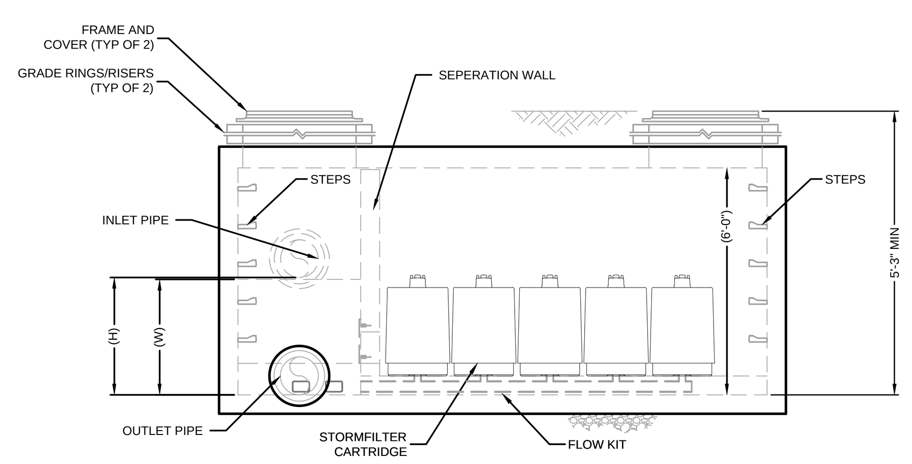

ELEVATION

STORMFILTER DESIGN TABLE

- THE 8' x 14' PEAK DIVERSION STORMFILTER TREATMENT CAPACITY VARIES BY CARTRIDGE COUNT AND LOCALLY APPROVED SURFACE AREA SPECIFIC FLOW RATE. PEAK CONVEYANCE CAPACITY TO BE DETERMINED BY ENGINEER OF RECORD.
- THE PEAK DIVERSION STORMFILTER IS AVAILABLE IN A LEFT INLET (AS SHOWN) OR RIGHT INLET CONFIGURATION.
- ALL PARTS AND INTERNAL ASSEMBLY PROVIDED BY CONTECH UNLESS OTHERWISE NOTED.

CARTRIDGE HEIGHT	27"		18"		LOW DROP	
SYSTEM HYDRAULIC DROP (H - REQ'D. MIN.)	3.05'		2.3'		1.8'	
HEIGHT OF WEIR (W)	3.00'		2.25'		1.75'	
TREATMENT BY MEDIA SURFACE AREA	2 gpm/ft²	1 gpm/ft²	2 gpm/ft²	1 gpm/ft²	2 gpm/ft²	1 gpm/ft²
CARTRIDGE FLOW RATE (gpm)	22.5	11.25	15	7.5	10	5

SITE SPECIFIC DATA REQUIREMENTS

STRUCTURE ID			33A
WATER QUALITY FLOW RATE (cfs)			0.41
PEAK FLOW RATE (cfs)			2.03
RETURN PERIOD OF PEAK FLOW (yrs)			100
# OF CARTRIDGES REQUIRED			25
CARTRIDGE FLOW RATE			*
MEDIA TYPE (CSF, PERLITE, ZPG)			ZPG
PIPE DATA:	I.E.	MATERIAL	DIAMETER
INLET PIPE	122.16	PVC	18"
OUTLET PIPE	119.86	PVC	18"
INLET BAY RIM ELEVATION			130.9±
FILTER BAY RIM ELEVATION			130.9±
ANTI-FLOTATION BALLAST		WIDTH	HEIGHT
		*	*
NOTES/SPECIAL REQUIREMENTS:			

PERFORMANCE SPECIFICATION
FILTER CARTRIDGES SHALL BE MEDIA-FILLED, PASSIVE, SIPHON ACTUATED, RADIAL FLOW, AND SELF CLEANING. **RADIAL MEDIA DEPTH SHALL BE 7-INCHES**. FILTER MEDIA CONTACT TIME SHALL BE AT LEAST **37 SECONDS**.
SPECIFIC FLOW RATE SHALL BE **2 GPM/SF (MAXIMUM)**. SPECIFIC FLOW RATE IS THE MEASURE OF THE FLOW (GPM) DIVIDED BY THE MEDIA SURFACE CONTACT AREA (SF). MEDIA VOLUMETRIC FLOW RATE SHALL BE **6 GPM/CF OF MEDIA (MAXIMUM).**

GENERAL NOTES
1. CONTECH TO PROVIDE ALL MATERIALS UNLESS NOTED OTHERWISE.
2. DIMENSIONS MARKED WITH ( ) ARE REFERENCE DIMENSIONS. ACTUAL DIMENSIONS MAY VARY.
3. FOR FABRICATION DRAWINGS WITH DETAILED STRUCTURE DIMENSIONS AND WEIGHTS, PLEASE CONTACT YOUR CONTECH REPRESENTATIVE. www.ContechES.com
4. STORMFILTER WATER QUALITY STRUCTURE SHALL BE IN ACCORDANCE WITH ALL DESIGN DATA AND INFORMATION CONTAINED IN THIS DRAWING. CONTRACTOR TO CONFIRM STRUCTURE MEETS REQUIREMENTS OF PROJECT.
5. STRUCTURE SHALL MEET AASHTO #### LOAD RATING, ASSUMING EARTH COVER OF 0' - 5' AND GROUNDWATER ELEVATION AT, OR BELOW, THE OUTLET PIPE INVERT ELEVATION. ENGINEER OF RECORD TO CONFIRM ACTUAL GROUNDWATER ELEVATION. CASTINGS SHALL MEET AASHTO M306 AND BE CAST WITH THE CONTECH LOGO.

INSTALLATION NOTES
A. ANY SUB-BASE, BACKFILL DEPTH, AND/OR ANTI-FLOTATION PROVISIONS ARE SITE-SPECIFIC DESIGN CONSIDERATIONS AND SHALL BE SPECIFIED BY ENGINEER OF RECORD.
B. CONTRACTOR TO PROVIDE EQUIPMENT WITH SUFFICIENT LIFTING AND REACH CAPACITY TO LIFT AND SET THE STORMFILTER STRUCTURE (LIFTING CLUTCHES PROVIDED).
C. CONTRACTOR TO INSTALL JOINT SEALANT BETWEEN ALL SECTIONS AND ASSEMBLE STRUCTURE.
D. CONTRACTOR TO PROVIDE, INSTALL, AND GROUT PIPES. MATCH OUTLET PIPE INVERT WITH OUTLET BAY FLOOR.
E. CONTRACTOR TO TAKE APPROPRIATE MEASURES TO PROTECT CARTRIDGES FROM CONSTRUCTION-RELATED EROSION RUNOFF.
F. CONTRACTOR TO REMOVE THE TRANSFER HOLE COVER WHEN THE SYSTEM IS BROUGHT ONLINE.

CONTECH ENGINEERED SOLUTIONS LLC
www.ContechES.com
9025 Centre Pointe Dr., Suite 400, West Chester, OH 45069
800-338-1122 513-645-7000 513-645-7993 FAX

THE STORMWATER MANAGEMENT STORMFILTER
8' x 14' PEAK DIVERSION STORMFILTER
STANDARD DETAIL

P:\PROJECTS\15104\CAD\CLARK ES\15104-ST DETAILS-CONTEC.DWG 4/4/2016 6:53 AM

4 NOT USED
NOT TO SCALE

THESE DRAWINGS ARE NOT TO BE USED FOR CONSTRUCTION UNLESS SIGNED BY THE REVIEWING AGENCY

811 CALL 2 BUSINESS DAYS BEFORE YOU DIG 811 OR 1-800-424-5555

Integrity Works
Consulting Engineers, LLC
170 W. Dayton St. Suite 204 Edmonds WA 98020
O: 425.967.7913 C: 206.920.9410

Cornerstone
ARCHITECTURAL GROUP
6161 NE 175th Street, Suite 101
Kenmore, Washington 98028
Phone: 206.682.5000
cornerstonearch.com

© Cornerstone Architectural Group

JOSEPH B. MOON
STATE OF WASHINGTON
36922
REGISTERED PROFESSIONAL ENGINEER
04/04/16

CLARK ELEMENTARY SCHOOL
ISSAQUAH SCHOOL DISTRICT
400 1st AVE. SE
ISSAQUAH, WASHINGTON 98027

PERMIT SET
SHEET TITLE: STORM DRAINAGE DETAILS
DATE: 04-04-16
PROJECT NO: 191406
REVISIONS:

C6.08

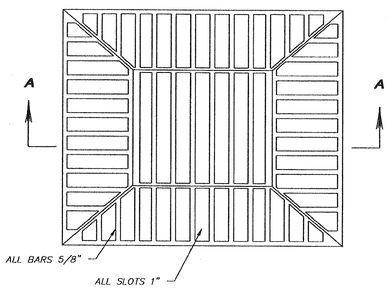

PLAN

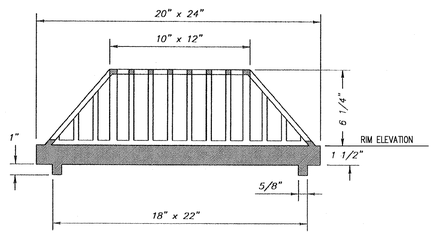

SECTION A-A

NOTES:

1) USE WITH STANDARD PLAN B-2a FRAME.
2) MATERIAL TO CONFORM TO WSDOT STANDARD SPECIFICATIONS 9-05.15(2).

(NOT TO SCALE)

1 BEEHIVE GRATE
NOT TO SCALE

2 NOT USED
NOT TO SCALE

3 NOT USED
NOT TO SCALE

4 NOT USED
NOT TO SCALE

CALL 2 BUSINESS DAYS BEFORE YOU DIG 811 OR 1-800-424-5555

THESE DRAWINGS ARE NOT TO BE USED FOR CONSTRUCTION UNLESS SIGNED BY THE REVIEWING AGENCY

Integrity Works
Consulting Engineers, LLC
170 W. Dayton St. Suite 204 Edmonds WA 98020
O: 425.967.7913 C: 206.920.9410

Cornerstone
ARCHITECTURAL GROUP
6161 NE 175th Street, Suite 101
Kenmore, Washington 98028
Phone: 206.682.5000
cornerstonearch.com

© Cornerstone Architectural Group

JOSEPH B. MOORE
STATE OF WASHINGTON
38972
PROFESSIONAL ENGINEER
04/04/16

CLARK ELEMENTARY SCHOOL
ISSAQUAH SCHOOL DISTRICT
400 1st AVE. SE
ISSAQUAH, WASHINGTON 98027

PERMIT SET

SHEET TITLE: STORM DRAINAGE DETAILS

DATE: 04-04-16 PROJECT NO: 191406

REVISIONS:

C6.09

SW1/4, NW1/4, SEC. 34, TWP. 24N, RGE 6E., W.M.

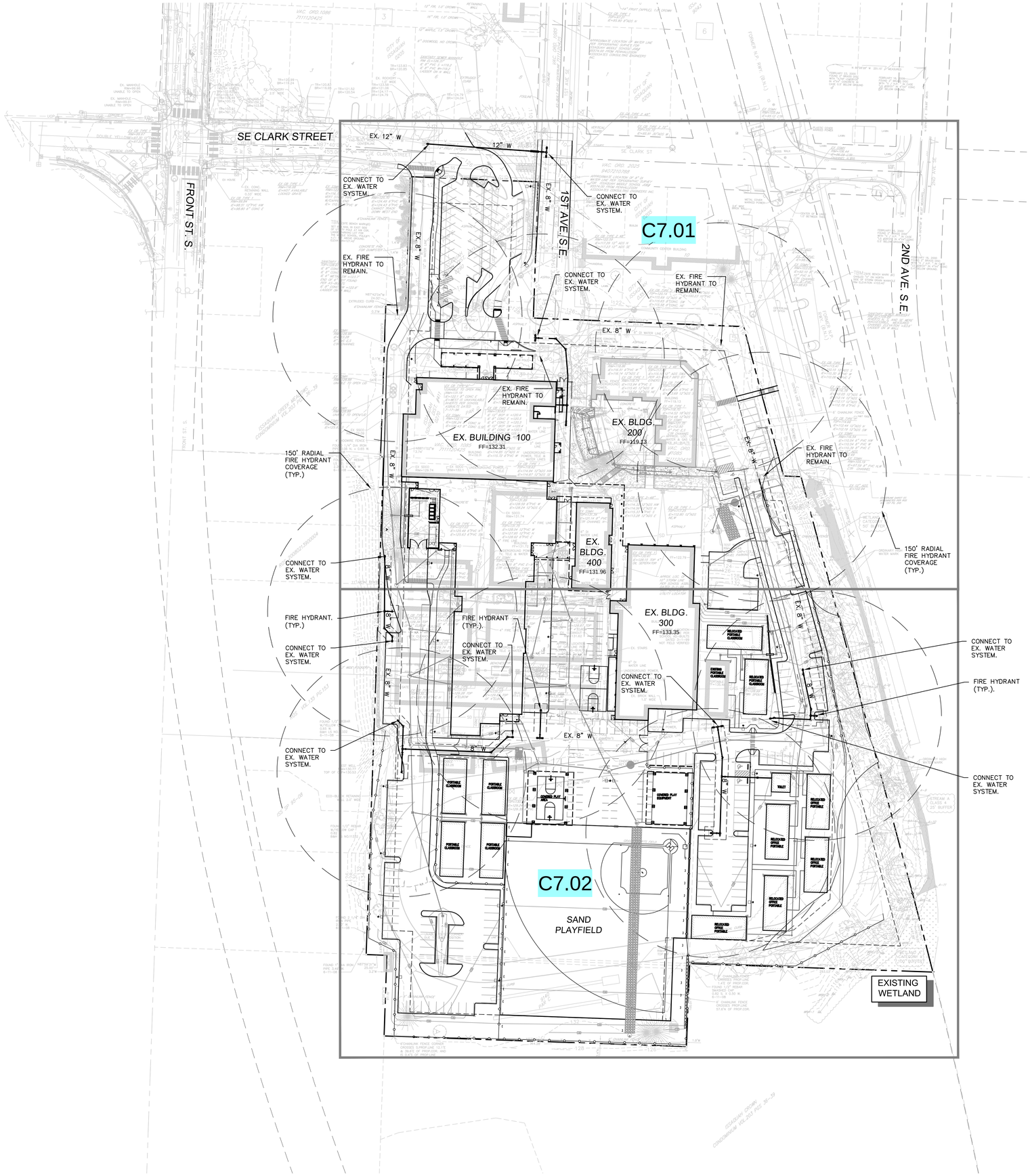

N

GRAPHIC SCALE
0 25 50 100 FEET
1" = 50 FEET

Cornerstone
ARCHITECTURAL GROUP
6161 NE 175th Street, Suite 101
Kenmore, Washington 98028
Phone: 206.682.5000
cornerstonearch.com

© Cornerstone Architectural Group

JOSEPH B. MOON
STATE OF WASHINGTON
34972
PROFESSIONAL ENGINEER
04/04/16

CLARK ELEMENTARY SCHOOL
ISSAQUAH SCHOOL DISTRICT
400 1st AVE. SE
ISSAQUAH, WASHINGTON 98027

CALL 2 BUSINESS DAYS BEFORE YOU DIG 811 OR 1-800-424-5555

THESE DRAWINGS ARE NOT TO BE USED FOR CONSTRUCTION UNLESS SIGNED BY THE REVIEWING AGENCY

Integrity Works
Consulting Engineers, LLC
170 W. Dayton St. Suite 204 Edmonds WA 98020
O: 425.967.7913 C: 206.920.9410

PERMIT SET

SHEET TITLE: WATER OVERVIEW PLAN

DATE: 04-04-16 PROJECT NO: 191406

REVISIONS:

C7.00

SW1/4, NW1/4, SEC. 34, TWP. 24N, RGE 6E., W.M.

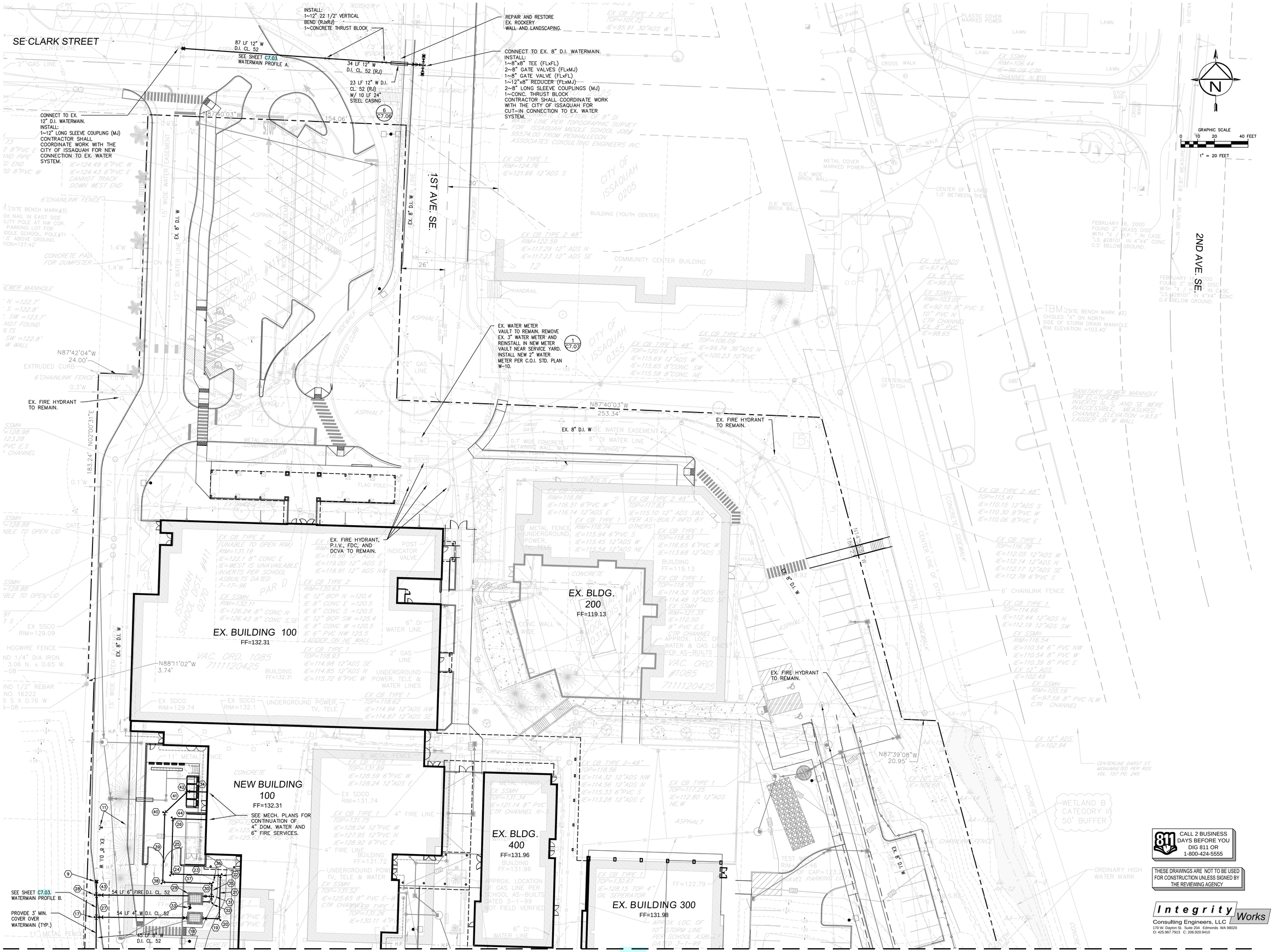

Cornerstone
ARCHITECTURAL GROUP
Phone: 206.682.5000
cornerstonearch.com
6161 NE 175th Street, Suite 101
Kenmore, Washington 98028

© Cornerstone Architectural Group

JOSEPH B. MOON
STATE OF WASHINGTON
38972
PROFESSIONAL ENGINEER
04/28/16

CLARK ELEMENTARY SCHOOL

ISSAQUAH SCHOOL DISTRICT
400 1st AVE. SE
ISSAQUAH, WASHINGTON 98027

CALL 2 BUSINESS DAYS BEFORE YOU DIG 811 OR 1-800-424-5555

THESE DRAWINGS ARE NOT TO BE USED FOR CONSTRUCTION UNLESS SIGNED BY THE REVIEWING AGENCY

Integrity Works
Consulting Engineers, LLC
170 W. Dayton St. Suite 204 Edmonds WA 98020
O: 425.967.7913 C: 206.920.9410

PERMIT SET

SHEET TITLE: WATER PLAN

DATE: 04-28-16
REVISIONS:

PROJECT NO: 191406

C7.01

MATCHLINE – SEE SHEET C7.01

SW1/4, NW1/4, SEC. 34, TWP. 24N, RGE 6E., W.M.

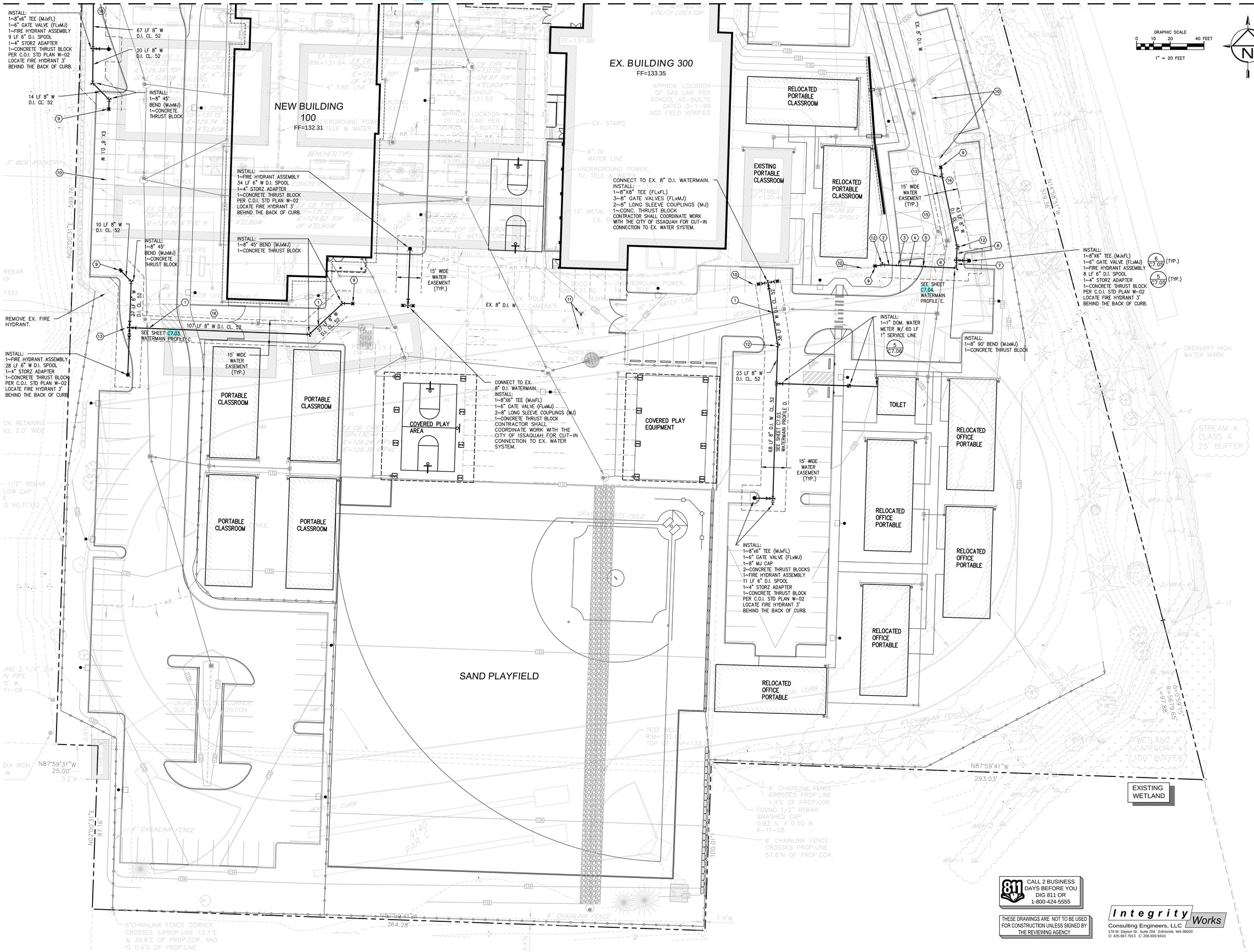

Cornerstone
ARCHITECTURAL GROUP
6161 NE 175th Street, Suite 101
Kenmore, Washington 98028
Phone: 206.682.5000
cornerstonearch.com

© Cornerstone Architectural Group

JOSEPH B. MOON
STATE OF WASHINGTON
38972
REGISTERED PROFESSIONAL ENGINEER
04/04/16

CLARK ELEMENTARY SCHOOL
ISSAQUAH SCHOOL DISTRICT
400 1st AVE. SE
ISSAQUAH, WASHINGTON 98027

PERMIT SET

SHEET TITLE: WATER PLAN

DATE: 04-04-16 PROJECT NO: 191406

REVISIONS:

C7.02

SW1/4, NW1/4, SEC. 34, TWP. 24N, RGE 6E., W.M.

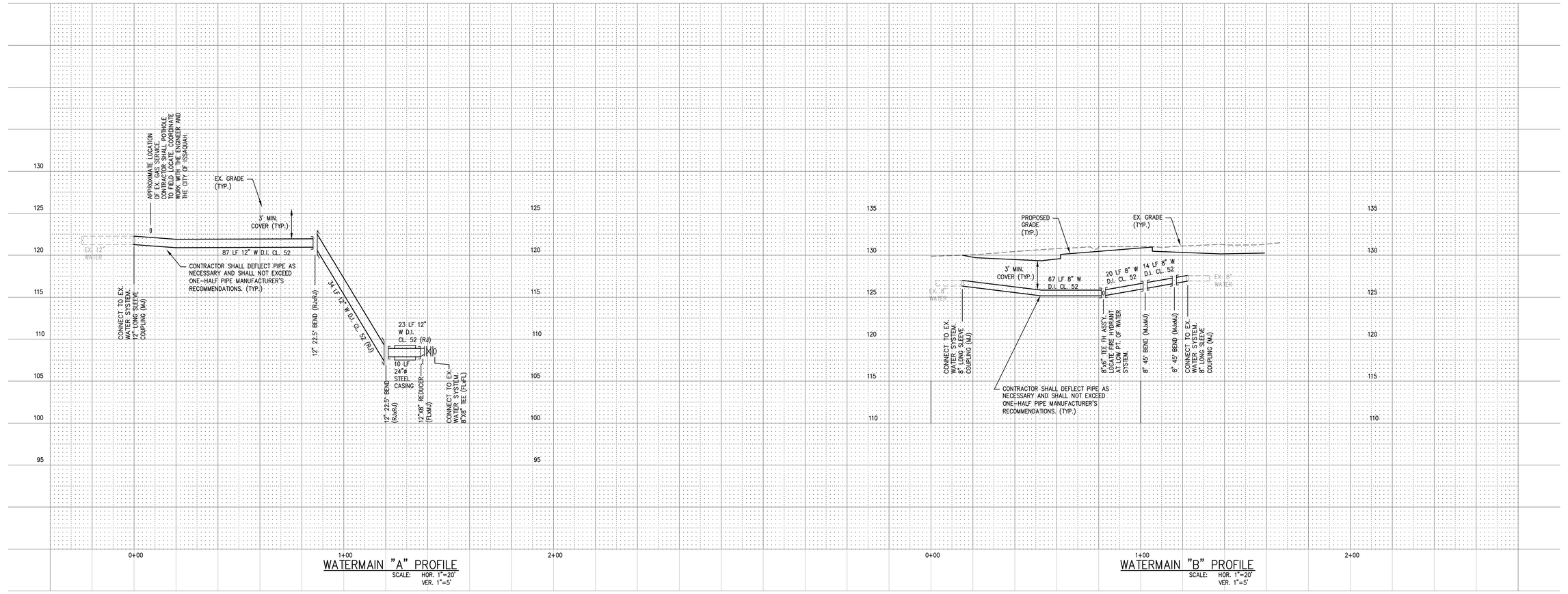

CALL 2 BUSINESS DAYS BEFORE YOU DIG 811 OR 1-800-424-5555

THESE DRAWINGS ARE NOT TO BE USED FOR CONSTRUCTION UNLESS SIGNED BY THE REVIEWING AGENCY

Integrity Works
Consulting Engineers, LLC
170 W. Dayton St. Suite 204 Edmonds WA 98020
O: 425.967.7913 C: 206.920.9410

Cornerstone ARCHITECTURAL GROUP
6161 NE 175th Street, Suite 101
Kenmore, Washington 98028
Phone: 206.682.5000
cornerstonearch.com

© Cornerstone Architectural Group

JOSEPH B. MOON STATE OF WASHINGTON 38972 PROFESSIONAL ENGINEER
04/04/16

CLARK ELEMENTARY SCHOOL
ISSAQUAH SCHOOL DISTRICT
400 1st AVE. SE
ISSAQUAH, WASHINGTON 98027

PERMIT SET

SHEET TITLE: WATER PROFILE

DATE: 04-04-16 PROJECT NO: 191406
REVISIONS:

C7.03

SW1/4, NW1/4, SEC. 34, TWP. 24N, RGE 6E., W.M.

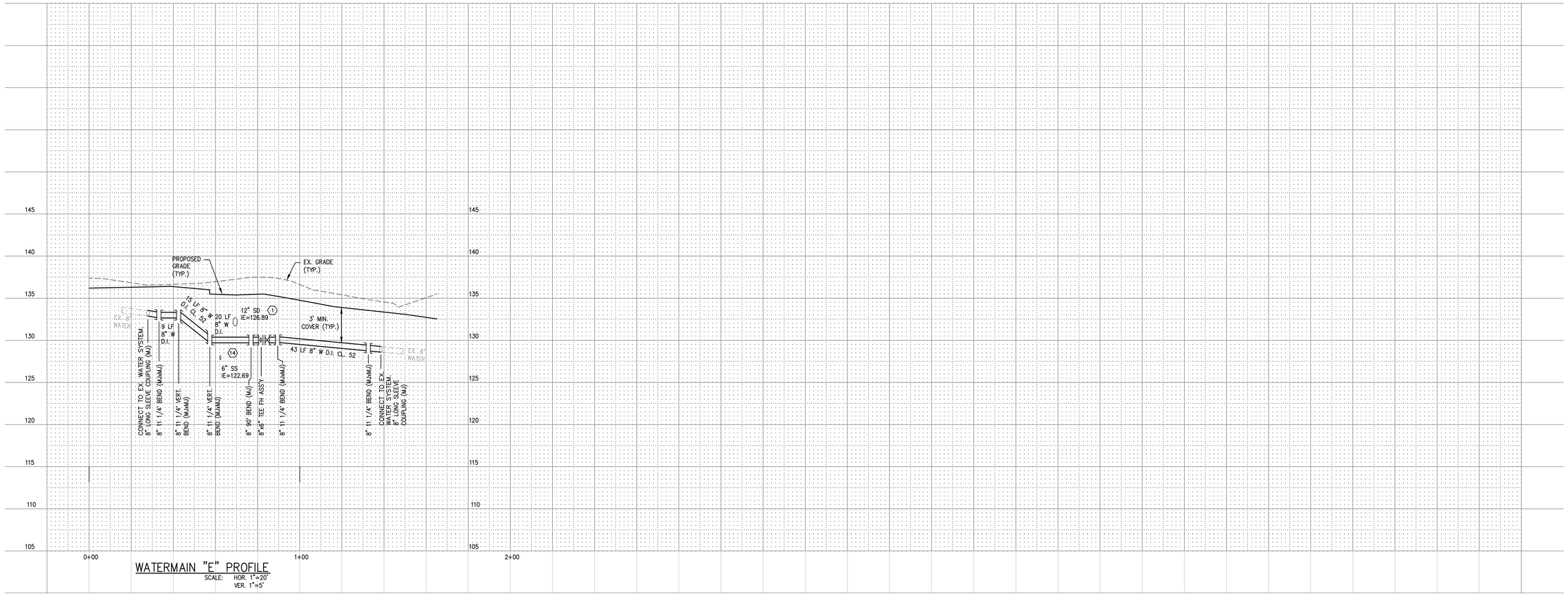

WATERMAIN "E" PROFILE

SCALE: HOR. 1"=20' VER. 1"=5'

CALL 2 BUSINESS DAYS BEFORE YOU DIG 811 OR 1-800-424-5555

THESE DRAWINGS ARE NOT TO BE USED FOR CONSTRUCTION UNLESS SIGNED BY THE REVIEWING AGENCY

Integrity Works
Consulting Engineers, LLC
170 W. Dayton St. Suite 204 Edmonds WA 98020
O: 425.967.7913 C: 206.920.9410

Cornerstone
ARCHITECTURAL GROUP
6161 NE 175th Street, Suite 101
Kenmore, Washington 98028
Phone: 206.682.5000
cornerstonearch.com

© Cornerstone Architectural Group

JOSEPH B. MOON
STATE OF WASHINGTON
34972
PROFESSIONAL ENGINEER
04/04/16

CLARK ELEMENTARY SCHOOL

ISSAQUAH SCHOOL DISTRICT
400 1st AVE. SE
ISSAQUAH, WASHINGTON 98027

PERMIT SET

SHEET TITLE: WATER PROFILE

DATE: 04-04-16 PROJECT NO: 191406

REVISIONS:

C7.04

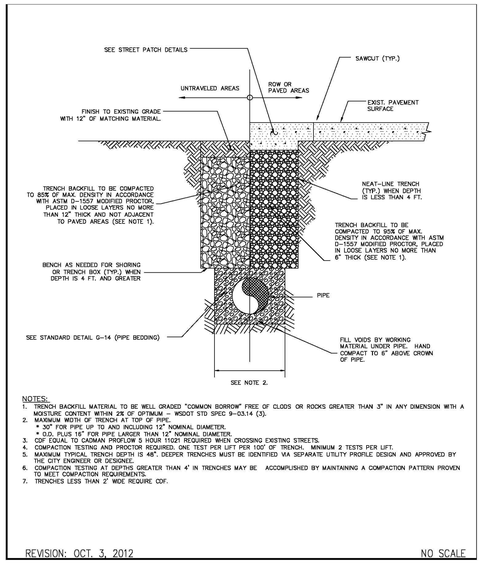

NOTES:
1. TRENCH BACKFILL MATERIAL TO BE WELL GRADED "COMMON BORROW" FREE OF CLODS OR ROCKS GREATER THAN 3" IN ANY DIMENSION WITH A MOISTURE CONTENT WITHIN 2% OF OPTIMUM – WSDOT STD SPEC 9-03.14 (3).
2. MAXIMUM WIDTH OF TRENCH AT TOP OF PIPE.
   * 30" FOR PIPE UP TO AND INCLUDING 12" NOMINAL DIAMETER.
   * O.D. PLUS 16" FOR PIPE LARGER THAN 12" NOMINAL DIAMETER.
3. CDF EQUAL TO CADMAN PROFLOW 5 HOUR 11021 REQUIRED WHEN CROSSING EXISTING STREETS.
4. COMPACTION TESTING AND PROCTOR REQUIRED. ONE TEST PER LIFT PER 100' OF TRENCH. MINIMUM 2 TESTS PER LIFT.
5. MAXIMUM TYPICAL TRENCH DEPTH IS 48". DEEPER TRENCHES MUST BE IDENTIFIED VIA SEPARATE UTILITY PROFILE DESIGN AND APPROVED BY THE CITY ENGINEER OR DESIGNEE.
6. COMPACTION TESTING AT DEPTHS GREATER THAN 4' IN TRENCHES MAY BE ACCOMPLISHED BY MAINTAINING A COMPACTION PATTERN PROVEN TO MEET COMPACTION REQUIREMENTS.
7. TRENCHES LESS THAN 2' WIDE REQUIRE CDF.

REVISION: OCT. 3, 2012 NO SCALE

CITY OF ISSAQUAH WASHINGTON – PUBLIC WORKS DEPARTMENT - GENERAL | TYPICAL PIPE TRENCH DETAIL | STANDARD DETAIL NO. G-01

1 TYPICAL PIPE TRENCH DETAIL
NOT TO SCALE

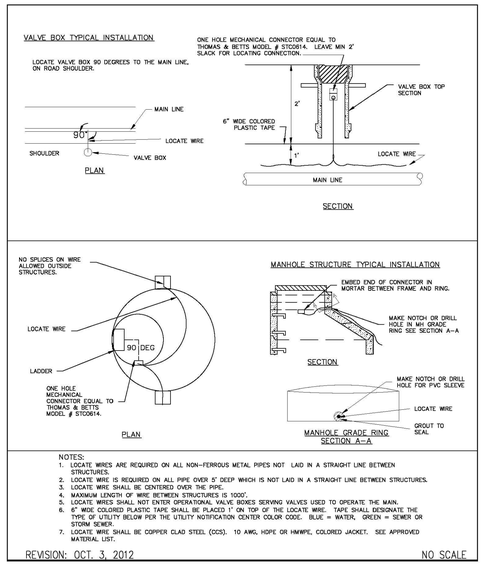

NOTES:
1. LOCATE WIRES ARE REQUIRED ON ALL NON-FERROUS METAL PIPES NOT LAID IN A STRAIGHT LINE BETWEEN STRUCTURES.
2. LOCATE WIRE IS REQUIRED ON ALL PIPE OVER 5' DEEP WHICH IS NOT LAID IN A STRAIGHT LINE BETWEEN STRUCTURES.
3. LOCATE WIRE SHALL BE CENTERED OVER THE PIPE.
4. MAXIMUM LENGTH OF WIRE BETWEEN STRUCTURES IS 1000'.
5. LOCATE WIRES SHALL NOT ENTER OPERATIONAL VALVE BOXES SERVING VALVES USED TO OPERATE THE MAIN.
6. 6" WIDE COLORED PLASTIC TAPE SHALL BE PLACED 1" ON TOP OF THE LOCATE WIRE. TAPE SHALL DESIGNATE THE TYPE OF UTILITY BELOW PER THE UTILITY NOTIFICATION CENTER COLOR CODE. BLUE = WATER, GREEN = SEWER OR STORM SEWER.
7. LOCATE WIRE SHALL BE COPPER CLAD STEEL (CCS). 10 AWG, HDPE OR HMWPE, COLORED JACKET. SEE APPROVED MATERIAL LIST.

REVISION: OCT. 3, 2012 NO SCALE

CITY OF ISSAQUAH WASHINGTON – PUBLIC WORKS DEPARTMENT - GENERAL | LOCATE WIRE DETAIL | STANDARD DETAIL NO. G-02

2 LOCATE WIRE DETAIL
NOT TO SCALE

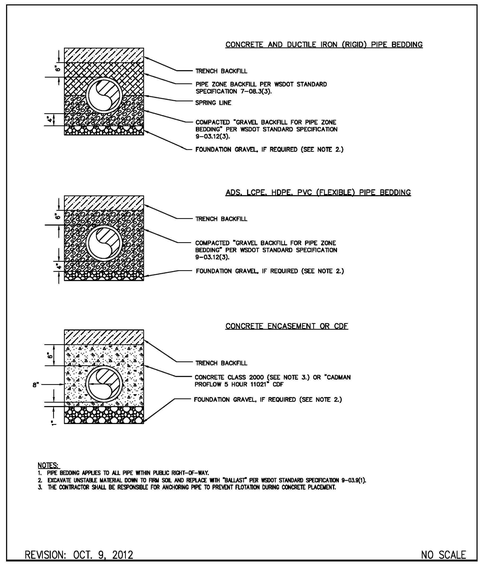

NOTES:
1. PIPE BEDDING APPLIES TO ALL PIPE WITHIN PUBLIC RIGHT-OF-WAY.
2. EXCAVATE UNSUITABLE MATERIAL DOWN TO FIRM SOIL AND REPLACE WITH "BALLAST" PER WSDOT STANDARD SPECIFICATION 9-03.9(1).
3. THE CONTRACTOR SHALL BE RESPONSIBLE FOR ANCHORING PIPE TO PREVENT FLOTATION DURING CONCRETE PLACEMENT.

REVISION: OCT. 9, 2012 NO SCALE

CITY OF ISSAQUAH WASHINGTON – PUBLIC WORKS DEPARTMENT - GENERAL | PIPE BEDDING | STANDARD DETAIL NO. G-14

3 PIPE BEDDING
NOT TO SCALE

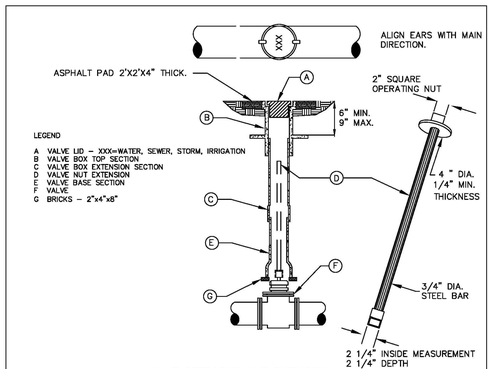

VALVE OPERATING NUT EXTENSION

EXTENSIONS ARE REQUIRED WHEN THE VALVE NUT IS MORE THAN FOUR (4) FEET BELOW FINISHED GRADE. ONLY ONE EXTENSION TO BE USED PER VALVE.

NOTES
1. BOX SHALL BE PERPENDICULAR TO THE VALVE AND MAIN.
2. BOX SHALL BE CENTERED OVER VALVE NUT.
3. NO DEBRIS WILL BE ALLOWED AROUND THE VALVE NUT.
4. ALL PARTS SHALL BE CAST OR DUCTILE IRON AND COATED WITH ASPHALT VARNISH.
5. VALVE BOX SHALL BE RICH (VANRICH CASTING CORP.):940 LID TO BE DEEP SKIRT.
6. VALVE EXTENSION SECTION FOR DEEP VALVES MAY USE CAST IRON (SOILS) PIPE. BELL END OVER OVER LOWER SECTION.
7. ALL EXTENSIONS ARE TO BE MADE OF STEEL, SIZED AS NOTED, AND HOT DIPPED GALVANIZED.
8. VALVE NUT EXTENSION SHALL TURN FREELY WITHOUT BINDING.
9. EXTENSIONS ARE REQUIRED WHEN THE VALVE NUT IS MORE THAN FOUR FEET BELOW FINISHED GRADE. ONLY ONE EXTENSION TO BE USED PER VALVE.

REVISION: OCT. 3, 2012 NO SCALE

CITY OF ISSAQUAH WASHINGTON – PUBLIC WORKS DEPARTMENT - GENERAL | VALVE BOX AND VALVE EXTENSION INSTALLATION | STANDARD DETAIL NO. G-15

4 VALVE BOX AND VALVE EXTENTION INSTALLATION
NOT TO SCALE

THRUST BLOCK – TABLE

PIPE SIZE	PRESSURE PSI	MINIMUM BEARING AREA AGAINST UNDISTURBED SOIL "SQUARE FEET" 90°	45°	22 1/2°	11 1/4°	TEE/ CAP
4"	300	8	4	3	1	6
6"	300	18	10	5	3	13
8"	300	32	18	9	5	23
10"	300	50	27	14	7	36
12"	300	72	39	20	11	51

THIS TABLE IS PROVIDED AS A MINIMUM GUIDELINE ONLY. ALL BLOCKING SHALL BE DESIGNED AND STAMPED BY A LICENSED CIVIL ENGINEER.

* TABLE CALCULATED AT 1000 LB/SF BEARING AREA. BY THE CITY.
* IN SOFT SOIL OR PEAT, PIPE RESTRAIN SHALL BE DESIGNED BY LICENSED ENGINEER AND APPROVED
* SAFETY FACTOR = 1.5

NOTES

1. ALL BLOCKING SHALL BE DESIGNED AND STAMPED BY A LICENSED CIVIL ENGINEER.
2. BLOCKING SHALL CONSIST OF A MINIMUM 3,000 PSI READY MIX CONCRETE WITH 6" MAXIMUM SLUMP.
3. CONCRETE BLOCKING SHALL BE CAST IN PLACE AND BE FULL SIZE WIDTH BEARING AGAINST THE FITTING.
4. BLOCK SHALL BEAR AGAINST FITTING ONLY AND SHALL BE CLEAR OF JOINTS TO PERMIT TIGHTENING OR DISMANTLING JOINT.
5. 8-MIL PLASTIC INSTALLED BETWEEN PIPE AND CONCRETE.
6. VERTICAL BLOCKING SYSTEMS REQUIRE SPECIAL DESIGN BY A LICENSED CIVIL ENGINEER.

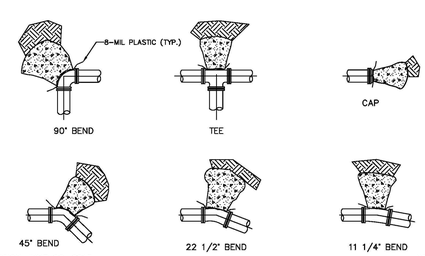

REVISION: JUNE 22, 2013 NO SCALE

CITY OF ISSAQUAH WASHINGTON – PUBLIC WORKS DEPARTMENT - WATER | TYPICAL HORIZONTAL CONCRETE BLOCKING | STANDARD DETAIL NO. W-01

5 TYPICAL HORIZONTAL CONCRETE BLOCKING
NOT TO SCALE

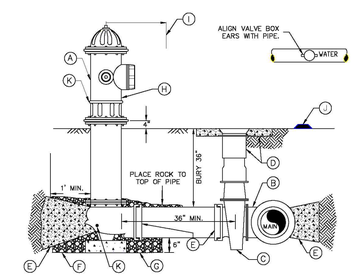

LEGEND

A. M&H-929 OR MUELLER CENTURION, 5 ¼" M.V.O. HYDRANT WITH (2) 2 1/2" NATIONAL STANDARD THREAD AND 1-4" PUMPER PORT, SEATTLE STANDARD THREAD, M.J. INLET WITH LUGS, BRASS TO BRASS SUB SEAT. HYDRANT TO BE FURNISHED IN WHITE AND THEN FIELD-PAINTED WITH TWO COATS OF HAMMERITE, HIGH GLOSS, WHITE, SMOOTH PAINT. PUMPER PORT TO FACE STREET OR AS DIRECTED BY THE FIRE DEPARTMENT. USE 5" STORZ ADAPTER WITH CAP; DO NOT PAINT STORZ FITTING.
B. FLANGE OUTLET ON DUCTILE IRON TEE OR SEE STANDARD DETAIL W-08 (TAPPING TEES).
C. 1-AUXILLARY GATE VALVE: AWWA C509, RESILIENT SEAT, M.J.xFL. WITH LUGS. SEE APPROVED MATERIAL LIST.
D. 1-TWO PIECE CAST IRON VALVE BOX. SEE STANDARD DETAIL G-15 (VALVE BOX INSTALLATION).
E. 1-6" DUCTILE IRON CLASS 52 CEMENT-LINED PIPE, LENGTH UP TO 50'. OVER 50', 8" CLASS 52 DUCTILE IRON IS REQUIRED. RESTRAIN PIPE WITH APPROVED SYSTEM – SEE APPROVED MATERIAL LIST OR STANDARD DETAIL W-01 (TYPICAL HORIZONTAL CONCRETE BLOCKING).
F. ½ YARD WASHED DRAIN ROCK (⅜"), PLACE TO TOP OF PIPE. PLACE GEO FABRIC AROUND TOP AND SIDES OF GRAVEL. DO NOT BLOCK DRAIN HOLES. DEEPER EXCAVATION WITH MORE DRAIN ROCK MAY BE REQUIRED IN POOR DRAINING SOILS.
G. 18"x8"x4" MINIMUM SIZE CONCRETE BLOCK UNDER HYDRANT.
H. FOOTAGE TO VALVE STENCILED ON HYDRANT IN 2" BLACK BLOCK ENAMEL NUMBERS TO THE NEAREST FOOT. LETTERS SHALL FACE HYDRANT VALVE.
I. MINIMUM 3' CLEAR, LEVEL AREA AROUND HYDRANT.
J. TWO WAY 4" SQUARE RAISED PAVEMENT MARKER BLUE. PLACE 4" OFF STREET CENTERLINE – HYDRANT SIDE.
K. DRAIN HOLE

NOTES

1. HYDRANT SHALL BE VERTICAL (PLUMB).
2. EXTENSION KITS ARE NOT ALLOWED.

REVISION: JUNE 22, 2013 NO SCALE

CITY OF ISSAQUAH WASHINGTON – PUBLIC WORKS DEPARTMENT - WATER | FIRE HYDRANT ASSEMBLY | STANDARD DETAIL NO. W-02

6 FIRE HYDRANT ASSEMBLY
NOT TO SCALE

THESE DRAWINGS ARE NOT TO BE USED FOR CONSTRUCTION UNLESS SIGNED BY THE REVIEWING AGENCY

811 CALL 2 BUSINESS DAYS BEFORE YOU DIG 811 OR 1-800-424-5555

Integrity Works
Consulting Engineers, LLC
170 W. Dayton St. Suite 204 Edmonds WA 98020
O: 425.967.7913 C: 206.920.9410

Cornerstone ARCHITECTURAL GROUP
6161 NE 175th Street, Suite 101
Kenmore, Washington 98028
Phone: 206.682.5000
cornerstonearch.com

© Cornerstone Architectural Group

JOSEPH B. MOON – STATE OF WASHINGTON – 36972 – REGISTERED PROFESSIONAL ENGINEER
04/04/16

CLARK ELEMENTARY SCHOOL
ISSAQUAH SCHOOL DISTRICT
400 1st AVE. SE
ISSAQUAH, WASHINGTON 98027

PERMIT SET
SHEET TITLE: WATER DETAILS
DATE: 04-04-16 PROJECT NO: 191406
REVISIONS:

C7.05

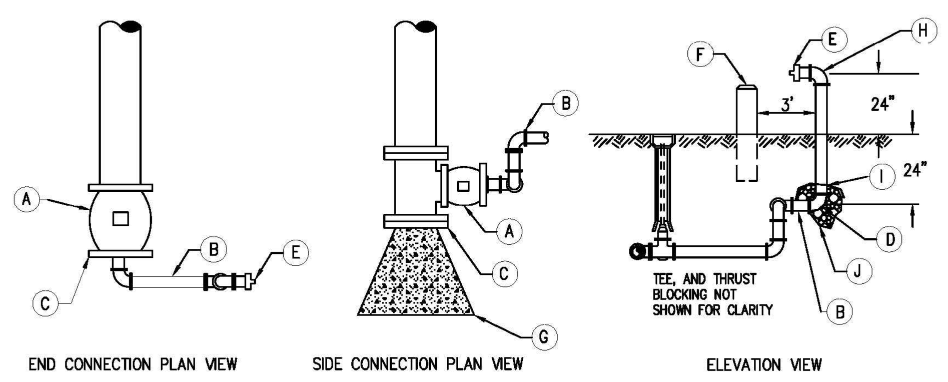

MAIN SIZE	QUANTITY	BLOW-OFF SIZE
6	1	4"
8	1	4"
10	1	F.H.
12	1	F.H.
≥16	PIG	4"

LEGEND

A. CAST IRON GATE VALVE, MAIN SIZE x BLOW-OFF SIZE TEE, NON RISING STEM (NRS), WITH 2" SQUARE OPERATING NUT C509 FLANGE x FLANGE WITH TAPPED FLANGE AS NEEDED.
B. BRASS OR DUCTILE IRON PIPE. PROVIDE SWING JOINT ON THREADED PIPE.
C. BLIND FLANGE OR M.J. PLUG x SIZED BLOW-OFF PIPE.
D. 90° ELBOW WITH ⅛" DRAIN HOLE.
E. 4" BRASS CAP WITH SEATTLE STANDARD THREAD.
F. GUARD POSTS WHEN REQUIRED. SEE STANDARD DETAIL G-04 (TYPICAL BOLLARD PLACEMENT – SEE FIXED BOLLARDS).
G. PROVIDE RESTRAINED JOINTS OR THRUSTS BLOCKS FOR DEAD END. (PER DESIGN ENGINEER). SEE STANDARD DETAIL W-01 (TYPICAL HORIZONTAL CONCRETE BLOCKING DETAIL).
H. PAINT ALL ABOVE-GROUND PIPE, FITTINGS AND GUARD POST(S) WITH TWO COATS HAMMERITE HIGH GLOSS WHITE SMOOTH PAINT.
I. PROVIDE GEO FABRIC AROUND TOP AND SIDES OR ROCK. DO NOT BLOCK DRAIN HOLE.
J. PLACE ⅓ YARD OF ⅞" WASHED ROCK AROUND DRAIN HOLE. DEEPER EXCAVATION WITH MORE DRAIN ROCK MAY BE REQUIRED IN POOR DRAINING SOILS,

NOTES

1. SEE STANDARD DETAIL G-15 (VALVE BOX INSTALLATION).
2. LOCATION OF BLOW-OFF TO BE DETERMINED BY CITY.
3. STENCIL FOOTAGE TO VALVE ON DISCHARGE PIPE. 2" BLACK BLOCK ENAMEL NUMBERS.
4. HYDRANT ASSEMBLIES MAY BE SUBSTITUTED FOR BLOW-OFF ASSEMBLIES. SEE STANDARD DETAIL W-02 (FIRE HYDRANT ASSEMBLY).
5. VALVE SHALL BE LOCATED AT LEAST 3' FROM GUARD POST OR STAND PIPE.

REVISION: JUNE 22, 2013 — NO SCALE

CITY OF ISSAQUAH WASHINGTON — PUBLIC WORKS DEPARTMENT - WATER | BLOW-OFF ASSEMBLY | STANDARD DETAIL NO. W-04

(1) BLOW-OFF ASSEMBLY
NOT TO SCALE

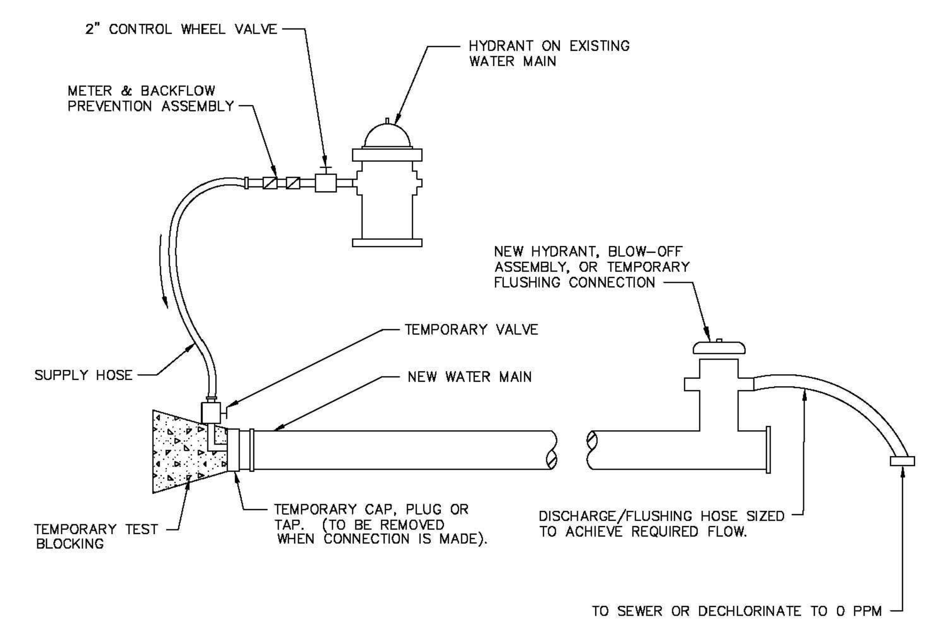

NOTES

1. AN APPROVED BACKFLOW PREVENTION ASSEMBLY SHALL BE INSTALLED BETWEEN THE EXISTING AND NEW WATER MAIN DURING DISINFECTION AND FLUSHING OF NEW WATER MAIN. (OBTAINED FROM ISSAQUAH PUBLIC WORKS OPERATIONS).
2. THE BACKFLOW PREVENTION ASSEMBLY AND SUPPLY HOSE MUST BE DISCONNECTED DURING HYDROSTATIC PRESSURE TESTING OF THE NEW MAIN.
3. THE NEW WATER MAIN SHALL BE CONNECTED TO THE EXISTING SYSTEM ONLY AFTER NEW MAIN IS FLUSHED, DISINFECTED AND SATISFACTORY BACTERIOLOGICAL SAMPLE RESULTS ARE OBTAINED.
4. FOR DISINFECTION PROCEDURES SEE TECHNICAL SPECIFICATIONS.
5. AFTER CHLORINE IS FLUSHED AND MAIN CONNECTION IS MADE, THE NEW MAIN SHALL BE FLUSHED AT A VELOCITY OF 5 FPS. DISCHARGE SHALL BE SCREENED TO COLLECT ROCKS. FLUSHING DURATION SHALL ENSURE AT LEAST 3 CHANGES OF WATER IN THE NEW MAIN.
6. IF FLOW OR DISCHARGE LIMITATIONS PREVENT ACHIEVING 5 FPS, THEN THE PIPE SHALL BE PIGGED.
7. PROVIDE DECHLORINATION DURING FLUSHING WHERE NECESSARY.

REVISION: JUNE 26, 2013 — NO SCALE

CITY OF ISSAQUAH WASHINGTON — PUBLIC WORKS DEPARTMENT - WATER | FILLING AND FLUSHING NEW WATER MAINS | STANDARD DETAIL NO. W-05

(2) FILLING AND FLUSHING NEW WATER MAINS
NOT TO SCALE

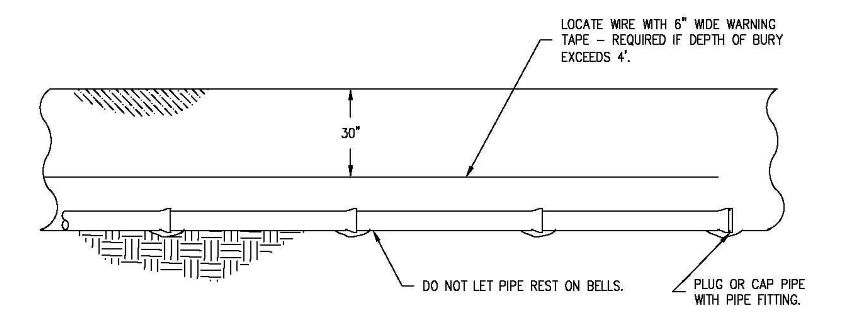

NOTES

1. LAY PIPE WITH BELLS UPGRADE.
2. PREPARE TRENCH SO PIPE IS SUPPORTED FULL-LENGTH.
3. PLUG OR CAP PIPE WHENEVER NOT ACTIVELY WORKING ON PIPE SECTION. USE MJ OR TYTON JOINT PLUG OR CAP. BOARDS, BUCKETS, ETC. ARE NOT ALLOWED.
4. EXTREME CARE SHALL BE TAKEN WHEN INSTALLING POLY ENCASEMENT TO PREVENT TEARS AND TO ENSURE PROPER SEAL.
5. PIPE THAT IS ROLLED OFF A TRUCK OR TRAILER, OR IS DROPPED OR OTHERWISE MISHANDLED WILL BE REJECTED.
6. CUT ENDS SHALL BE BEVELED PER MANUFACTURER SPECIFICATIONS PRIOR TO ASSEMBLY.
7. GASKETS SHALL BE LUBRICATED WITH APPROVED AWWA C11/A21.11-07 SEC. 4.5.4 LUBRICANT.
8. THE NEW WATER MAIN SHALL BE CONNECTED TO THE EXISTING SYSTEM ONLY AFTER NEW MAIN IS FLUSHED. DISINFECTED AND SATISFACTORY BACTERIOLOGICAL SAMPLE RESULTS ARE OBTAINED.
9. NEW MAINS SHALL BE FLUSHED AT A MINIMUM VELOCITY OF 5 FPS.
10. PIPES LESS THEN 20' OR LENGTHS APPROVED BY CITY ENGINEER MAY BE SWABBED WITH 500 PPM CHLORINE SOLUTION. CARE SHALL BE TAKEN NOT TO GET CHLORINE ON THE OUTSIDE OF THE PIPE OR FITTINGS.
11. EXTREME CARE SHALL BE TAKEN TO PREVENT WATER AND/OR DEBRIS FROM ENTERING PIPE.
12. A TORQUE WRENCH SHALL BE USED TO PROPERLY TIGHTEN BOLTS AND NUTS TO MANUFACTURER SPECIFICATIONS.
13. RESTRAINED JOINTS SHALL BE FULLY EXTENDED WHEN SPECIFIED BY THE ENGINEER.
14. JOINT ASSEMBLY SHALL BE INSTALLED PER MANUFACTURER SPECIFICATIONS.
15. PIPE LAYING OPERATIONS VIOLATING ANY SECTION OF THIS DETAIL SHALL BE IMMEDIATELY SUSPENDED UNTIL THE CITY HAS BEEN SATISFIED OF THE CONTRACTORS ABILITY TO MEET THESE REQUIREMENTS.
16. MAINTAIN 30" CLEAR ZONE AROUND WATER MAIN AND OTHER UTILITIES.

REVISION: JUNE 26, 2013 — NO SCALE

CITY OF ISSAQUAH WASHINGTON — PUBLIC WORKS DEPARTMENT - WATER | PIPE LAYING DETAIL | STANDARD DETAIL NO. W-06

(3) PIPE LAYING DETAIL
NOT TO SCALE

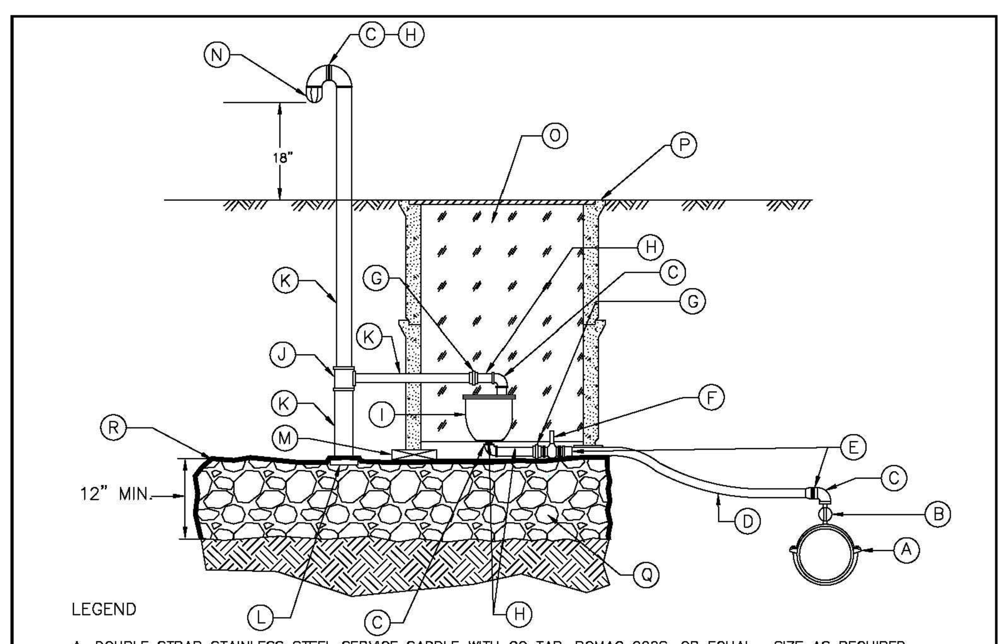

LEGEND

A. DOUBLE STRAP STAINLESS STEEL SERVICE SADDLE WITH CC TAP, ROMAC 202S, OR EQUAL. SIZE AS REQUIRED.
B. CORPORATION STOP, MALE CC THREAD INLET BY MALE IRON PIPE OUTLET. FORD OR MUELLER.
C. 90° BRASS ELBOW FEMALE IRON PIPE BY FEMALE IRON PIPE THREADS.
D. TYPE K SOFT COPPER WITH NO JOINTS. MAINTAIN POSITIVE SLOPE TO AIR VACUUM ASSEMBLY.
E. COUPLING COPPER TO MALE IRON PIPE THREADS: FORD OR MUELLER COMPRESSION FITTINGS.
F. BALL VALVE: FORD OR MUELLER.
G. BRASS UNION, FEMALE IRON PIPE BY FEMALE IRON PIPE.
H. NIPPLES: BRASS, MALE IRON PIPE BY MALE IRON PIPE THREADS, LENGTHS VARY.
I. AIR & VACUUM VALVE ASSEMBLY. SEE APPROVED MATERIAL LIST.
J. BRASS TEE, IRON PIPE THREADS.
K. BRASS PIPE, MALE IRON PIPE THREADS.
L. BRASS CAP WITH ¼" DRILLED HOLE. PLACE BELOW PLASTIC SHEET.
M. BRICKS 4-2"x4"x8" PLACED ON A COMPACTED SUBGRADE UNDER EACH CORNER.
N. BRASS BEEHIVE STRAINER
O. CEDAR SHAVINGS
P. METER BOX (2 SECTIONS REQUIRED) FOGTITE NO. 2T FOR 1" AND SMALLER VALVES. VAULT REQUIRED FOR 1-1/2" AND LARGER VALVES. SEE STANDARD DETAIL G-05 (VAULTS-GENERAL FEATURES).
Q. ⅞" WASHED ROCK
R. GEO FABRIC- ENCLOSE WASHED ROCK ON TOP AND ALL SIDES.

NOTES

1. ALL PIPE AND FITTINGS TO BE BRASS, DUCTILE IRON OR COPPER.
2. PIPE ABOVE GRADE TO BE PAINTED WITH 2 COATS HAMMERITE HIGH GLOSS WHITE SMOOTH PAINT.
3. AIR & VACUUM RELEASE VALVE ASSEMBLY TAP MUST BE INSTALLED AT HIGHEST POINT OF WATER MAIN.
4. LOCATE AIR & VACUUM METER BOX OUTSIDE OF TRAFFIC AREAS, BEHIND CURB OR SIDEWALK.
5. REQUIRED SIZE SHALL BE DESIGNED BY THE ENGINEER.
6. GUARD POST(S) MAY BE REQUIRED PER CITY'S DIRECTION. SEE STANDARD DETAIL G-04 (TYPICAL BOLLARD PLACEMENT – SEE FIXED BOLLARDS).

REVISION: JUNE 26, 2013 — NO SCALE

CITY OF ISSAQUAH WASHINGTON — PUBLIC WORKS DEPARTMENT - WATER | AIR VACUUM RELEASE VALVE ASSEMBLY | STANDARD DETAIL NO. W-07

(4) AIR VACUUM RELEASE VALVE ASSEMBLY
NOT TO SCALE

ARC LENGTH TABLE (MEASURED DISTANCE)

PIPE SIZE	8"	12"	16"	24"
ARC LENGTH	2"	3"	4"	6"

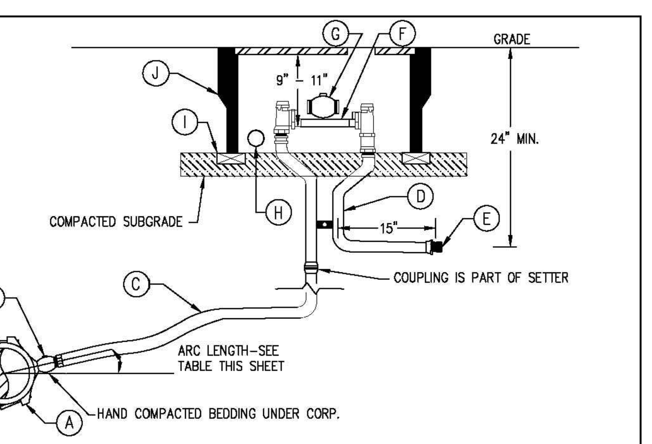

LEGEND

A. ROMAC SADDLE
STAINLESS STEEL (SINGLE STRAP) SERVICE SADDLE WITH TAPER (CC) TAP. DOUBLE STRAP FOR 12" AND LARGER PIPES.
• ROMAC 101-S, ROMAC 202-S FOR DUCTILE
• ROMAC SSI FOR AC.

B. CORPORATION STOP; TAPER (CC) INLET x COMPRESSION FOR COPPER OUTLET.
• FORD FB1000-3-Q FOR 3/4" SERVICE LINE
• FORD FB1000-4-Q FOR 1" SERVICE LINE
• MUELLER B-25008, SPECIFY SIZE

C. TYPE K SOFT COPPER WITH NO JOINTS

D. 5/8"x3/4" OR 1" METER SETTER
• 3/4" = FORD VBH92-15W-4M-33ZAQ
• 3/4"=MUELLER B-24104R2EFF1515
• 1" = MUELLER B-241042G1515
• 1" = FORD VBH94-15W-4M-44ZAQ

E. PLASTIC CAP

F. PVC JUMPER: DRILL – 1/4" HOLES
• 3/4" SETTER – 7 1/2" x 1" THRD PIPE.
• 1" SETTER – 10 3/4" X 1 1/4" THRD PIPE.

G. METER:
SENSUS 3/4" i-PERL, 7.5" LL, CCF
SENSUS 1" i-PERL, 10.5" LL, CCF

H. METER BOXES WITHIN 5' OF EACH OTHER MUST BE CONNECTED TOGETHER AND INDIVIDUALLY WITH 2" PVC CONDUIT SCHEDULE 40 WITH ENDS TAPED CLOSED BETWEEN BOXES.

I. 2"x4"x8" BRICKS PLACED UNDER EACH CORNER ON COMPACTED (FIRM) SUBGRADE.

J. METER BOX W/ 1-3/4" HOLE IN LID
2 HOLES IN LID FOR SINGLE INSTALLATION
FOR LOCATIONS W/MORE THAN 1 METER, ONLY 1 LID NEEDS 2 HOLES.
• 3/4" & 1" METERS IN SIDEWALK/PLANTERS-FOGTITE B-10 W/ CAST IRON LID.
• 3/4" METER IN VEHICLE AREAS-FOGTITE J-20-S W/TRAFFIC LID.
• 1" METER IN VEHICLE AREAS-FOGTITE J-11 (TYPE II) W/TRAFFIC LID.

NOTES

1. SERVICE LINE MUST BE INSTALLED PERPENDICULAR TO THE WATER MAIN. BACKFILL WITH ⅝" MINUS TO 1' OVER PIPE. COMPACT TO 95% MAX. DRY DENSITY PER ASTM D-1557.
2. SERVICE SADDLES ARE REQUIRED ON ALL PIPE EXCEPT CLASS 52 OR THICKER DUCTILE IRON. THE CORP. STOP MAY BE TAPPED DIRECTLY INTO CLASS 52 OR THICKER DUCTILE IRON PIPE FOR ¾" AND 1" TAPS. COMPACT TO 95% MAX DRY DENSITY PER ASTM D-1557.
3. SET BOX AT GRADE AND LEVEL WITH GRADE – PROVIDE POSITIVE DRAINAGE AWAY FROM BOX.
4. SINGLE SET SERVICE MUST BE A MINIMUM 20' APART.
5. DOUBLE OR MULTIPLE SERVICES MUST BE NO MORE THAN 2 FEET APART – 6" IN SIDEWALKS (WHERE APPROVED). FOR ¾" DOUBLE METERS USE "Y" FITTING – MUELLER H-15343 ¾" x 1" OR FORD Y44-2430Q. FOR 1" DOUBLE METERS USE "Y" FITTING – MUELLER H-15343 1"x1-1/2" OR FORD Y44-264 PACK JOINT.
6. METER LOCATIONS SHALL BE APPROVED BY CITY. AVOID VEHICLE TRAVEL AREAS WHENEVER POSSIBLE.
7. SERVICES SHALL BE INSTALLED BY THE CITY ON CITY OWNED MAINS.
8. SERVICES SHALL NOT BE TAPPED OFF HYDRANT OR FIRE SPRINKLER SYSTEM BRANCHES.
9. FILL METER BOX TO TOP WITH UNCOMPACTED CEDAR SHAVINGS.
10. CITY SHALL INSTALL METER UNLESS OTHERWISE APPROVED.
11. CONTRACTOR SHALL CONNECT PIPING FROM HOUSE TO METER PRIOR TO RADIO READ METER INSTALLATION.
12. ALL MULTIPLE METER BOXES THREE OR MORE MUST BE INDIVIDUALLY TAGGED. SECURE WITH WIRE-TIE TO LOWER LOCKING EAR OF SETTER. TAG MUST BE STAMPED OR ENGRAVED WITH HOUSE NUMBER. FONT SIZE MINIMUM ½".

REVISION: SEPT. 27, 2013 — NO SCALE

CITY OF ISSAQUAH WASHINGTON — PUBLIC WORKS DEPARTMENT - WATER | 3/4" AND 1" WATER METER SERVICE | STANDARD DETAIL NO. W-09

(5) WATER METER SERVICE
NOT TO SCALE

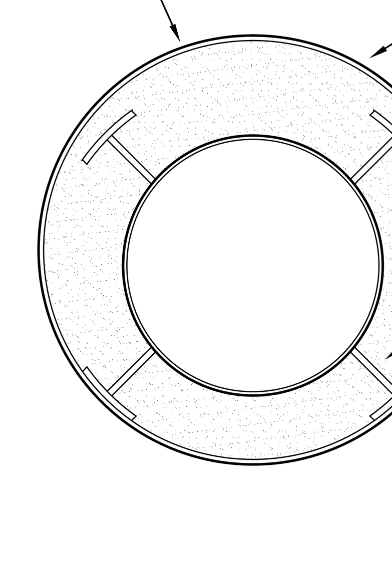

(6) PIPE CASING DETAIL
NOT TO SCALE

THESE DRAWINGS ARE NOT TO BE USED FOR CONSTRUCTION UNLESS SIGNED BY THE REVIEWING AGENCY

811 CALL 2 BUSINESS DAYS BEFORE YOU DIG 811 OR 1-800-424-5555

Integrity Works
Consulting Engineers, LLC
170 W. Dayton St. Suite 204 Edmonds WA 98020
O: 425.967.7913 C: 206.920.9410

Cornerstone
ARCHITECTURAL GROUP
6161 NE 175th Street, Suite 101
Kenmore, Washington 98028
Phone: 206.682.5000
cornerstonearch.com

© Cornerstone Architectural Group

JOSEPH B. MOON — STATE OF WASHINGTON — 36922 REGISTERED PROFESSIONAL ENGINEER
04/04/16

CLARK ELEMENTARY SCHOOL
ISSAQUAH SCHOOL DISTRICT
400 1st AVE. SE
ISSAQUAH, WASHINGTON 98027

PERMIT SET
SHEET TITLE: WATER DETAILS
DATE: 04-04-16
PROJECT NO: 191406
REVISIONS:

C7.06

SW1/4, NW1/4, SEC. 34, TWP. 24N, RGE 6E., W.M.

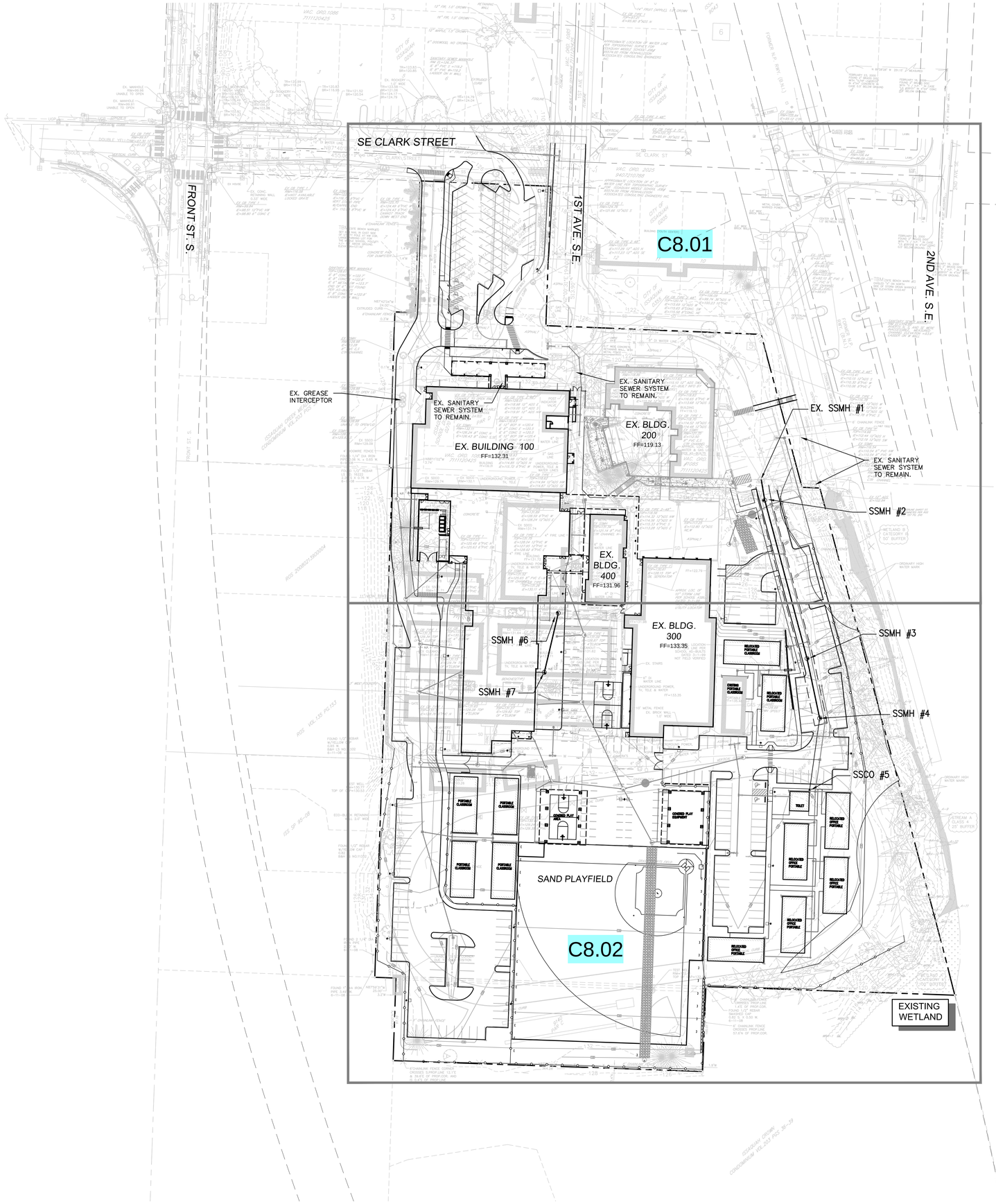

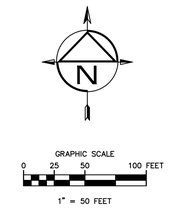

Cornerstone
ARCHITECTURAL GROUP
6161 NE 175th Street, Suite 101
Kenmore, Washington 98028
Phone: 206.682.5000
cornerstonearch.com

© Cornerstone Architectural Group

JOSEPH B. MOON
STATE OF WASHINGTON
38972
PROFESSIONAL ENGINEER
04/04/16

CLARK ELEMENTARY SCHOOL
ISSAQUAH SCHOOL DISTRICT
400 1st AVE. SE
ISSAQUAH, WASHINGTON 98027

CALL 2 BUSINESS DAYS BEFORE YOU DIG 811 OR 1-800-424-5555

THESE DRAWINGS ARE NOT TO BE USED FOR CONSTRUCTION UNLESS SIGNED BY THE REVIEWING AGENCY

Integrity Works
Consulting Engineers, LLC
170 W. Dayton St. Suite 204 Edmonds WA 98020
O: 425.967.7913 C: 206.920.9410

PERMIT SET

SHEET TITLE: SANITARY SEWER OVERVIEW PLAN

DATE: 04-04-16 PROJECT NO: 191406

REVISIONS:

C8.00

SW1/4, NW1/4, SEC. 34, TWP. 24N, RGE 6E., W.M.

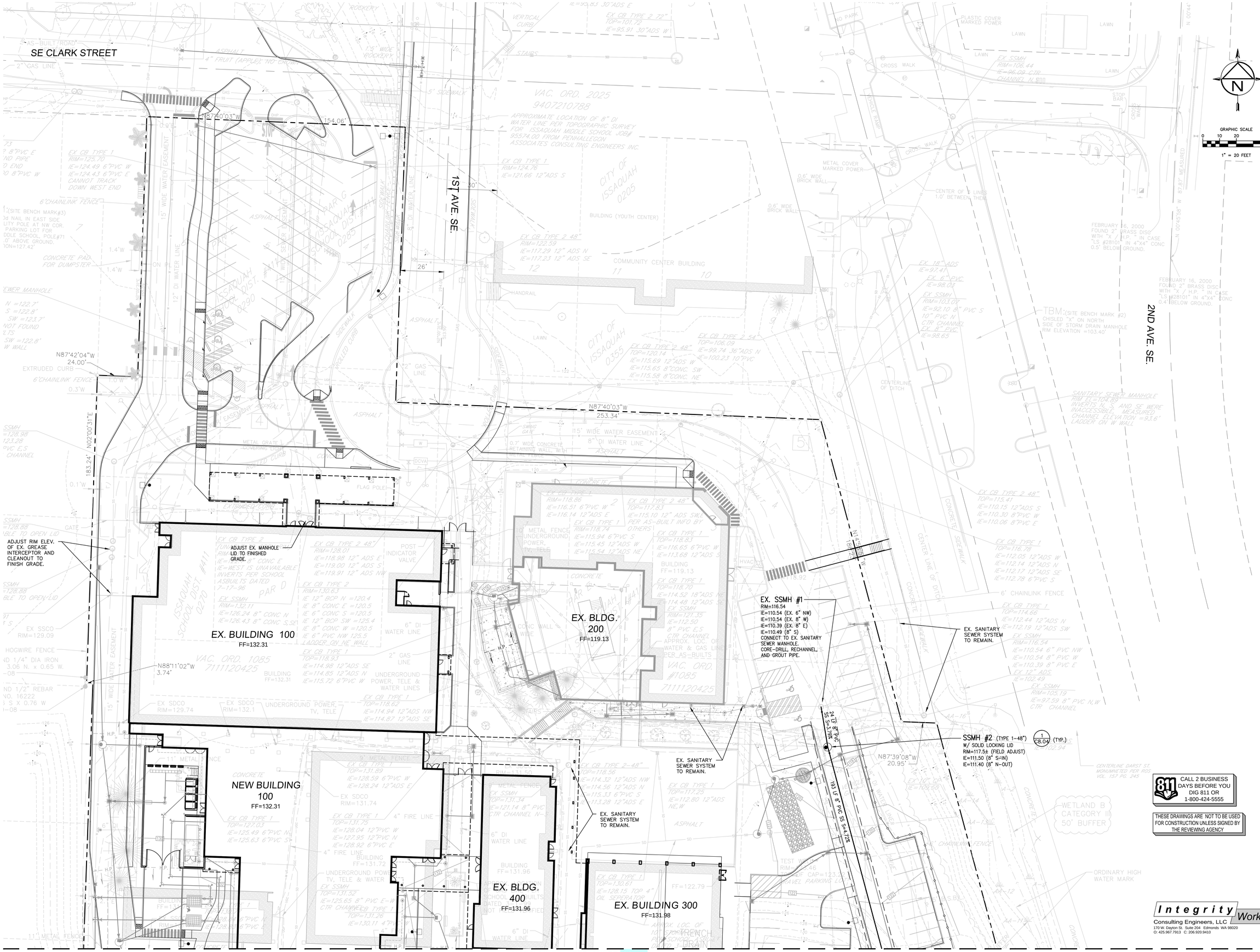

GRAPHIC SCALE
0 10 20 40 FEET
1" = 20 FEET

CALL 2 BUSINESS DAYS BEFORE YOU DIG 811 OR 1-800-424-5555

THESE DRAWINGS ARE NOT TO BE USED FOR CONSTRUCTION UNLESS SIGNED BY THE REVIEWING AGENCY

Integrity Works
Consulting Engineers, LLC
170 W. Dayton St. Suite 204 Edmonds WA 98020
O: 425.967.7913 C: 206.920.9410

Cornerstone
ARCHITECTURAL GROUP
Phone: 206.682.5000
cornerstonearch.com
6161 NE 175th Street, Suite 101
Kenmore, Washington 98028

© Cornerstone Architectural Group

JOSEPH B. MOON
STATE OF WASHINGTON
38972
PROFESSIONAL ENGINEER
04/28/16

CLARK ELEMENTARY SCHOOL
ISSAQUAH SCHOOL DISTRICT
400 1st AVE. SE
ISSAQUAH, WASHINGTON 98027

PERMIT SET

SHEET TITLE: SANITARY SEWER PLAN

DATE: 04-28-16 PROJECT NO: 191406

REVISIONS:

C8.01

MATCHLINE – SEE SHEET C8.01

SW1/4, NW1/4, SEC. 34, TWP. 24N, RGE 6E., W.M.

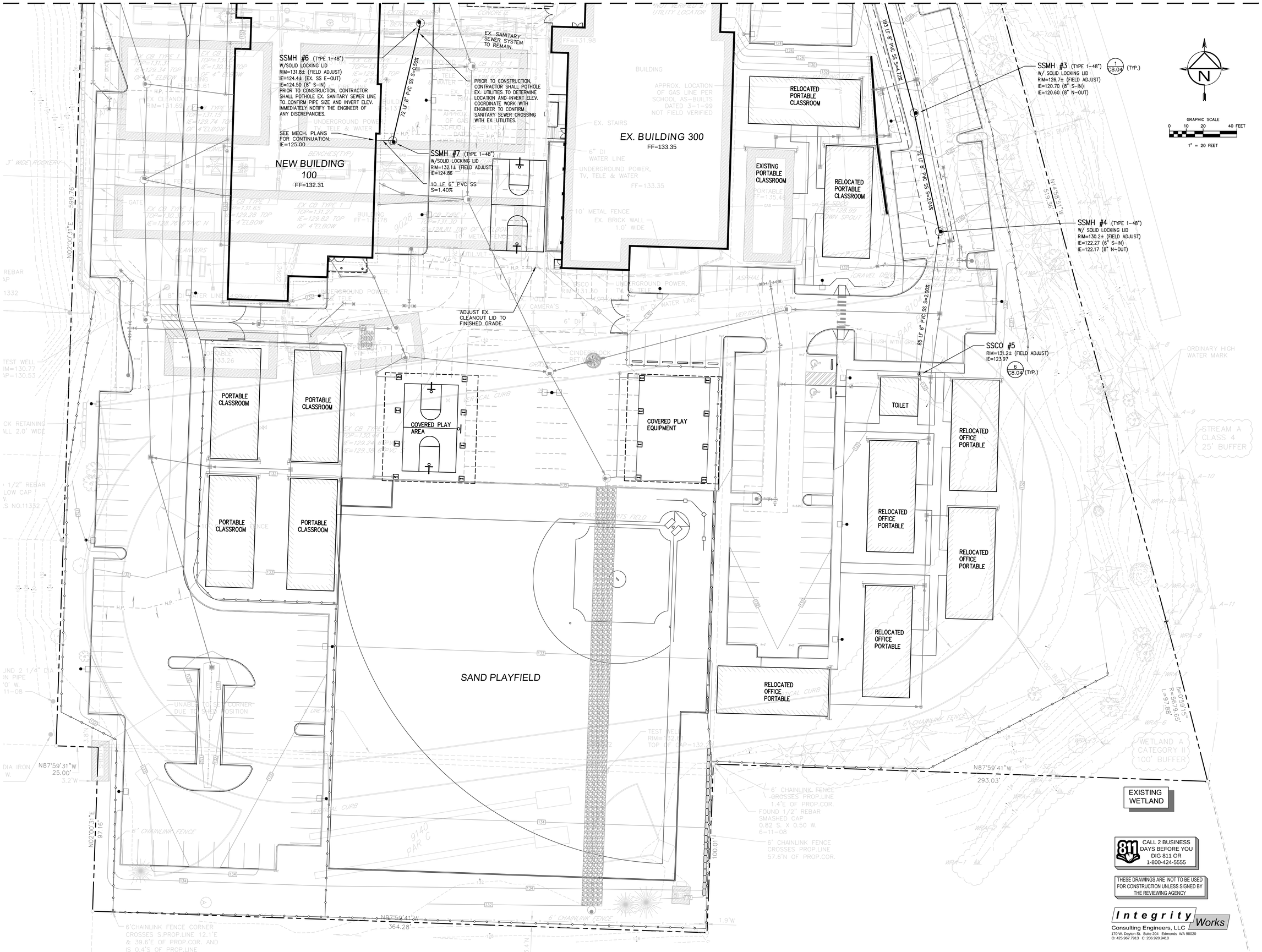

CALL 2 BUSINESS DAYS BEFORE YOU DIG 811 OR 1-800-424-5555

THESE DRAWINGS ARE NOT TO BE USED FOR CONSTRUCTION UNLESS SIGNED BY THE REVIEWING AGENCY

Integrity Works
Consulting Engineers, LLC
170 W. Dayton St. Suite 204 Edmonds WA 98020
O: 425.967.7913 C: 206.920.9410

Cornerstone
ARCHITECTURAL GROUP
6161 NE 175th Street, Suite 101
Kenmore, Washington 98028
Phone: 206.682.5000
cornerstonearch.com

© Cornerstone Architectural Group

JOSEPH B. MOON
STATE OF WASHINGTON
38972
PROFESSIONAL ENGINEER
04/04/16

CLARK ELEMENTARY SCHOOL
ISSAQUAH SCHOOL DISTRICT
400 1st AVE. SE
ISSAQUAH, WASHINGTON 98027

PERMIT SET

SHEET TITLE: SANITARY SEWER PLAN

DATE: 04-04-16 PROJECT NO: 191406

REVISIONS:

C8.02

SW1/4, NW1/4, SEC. 34, TWP. 24N, RGE 6E., W.M.

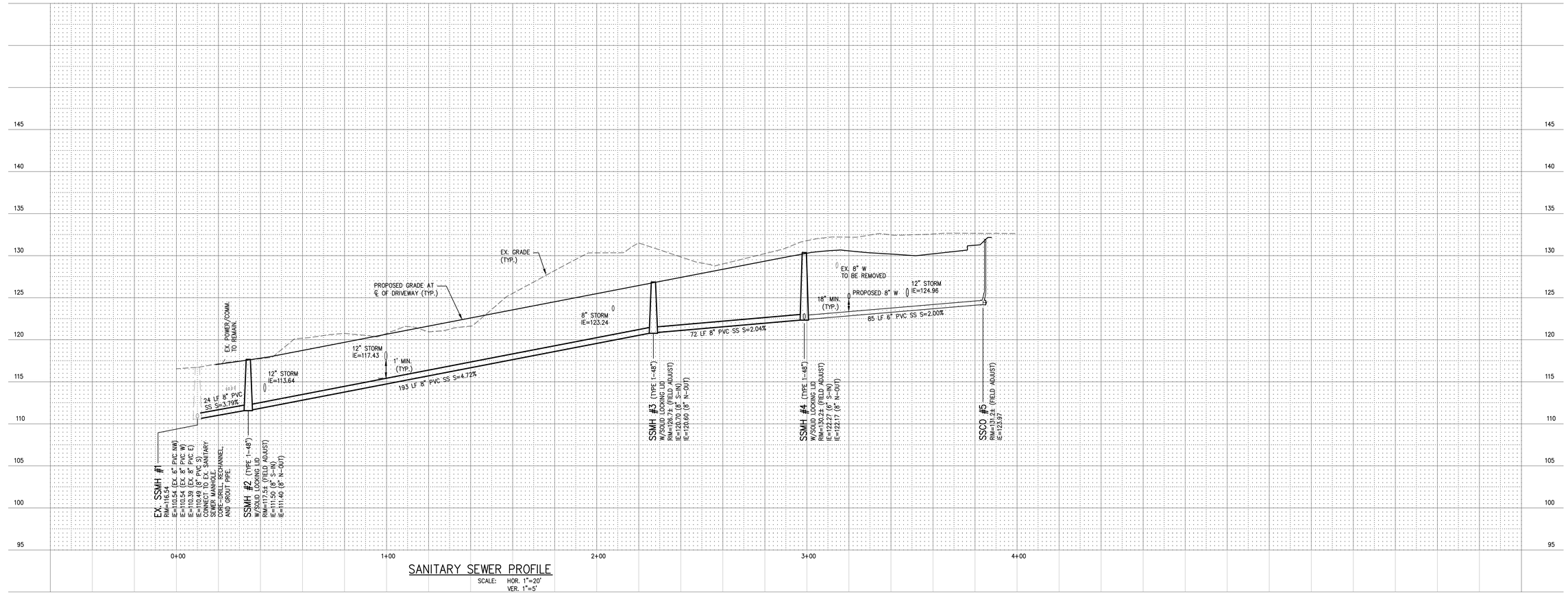

SANITARY SEWER PROFILE

SCALE: HOR. 1"=20'
VER. 1"=5'

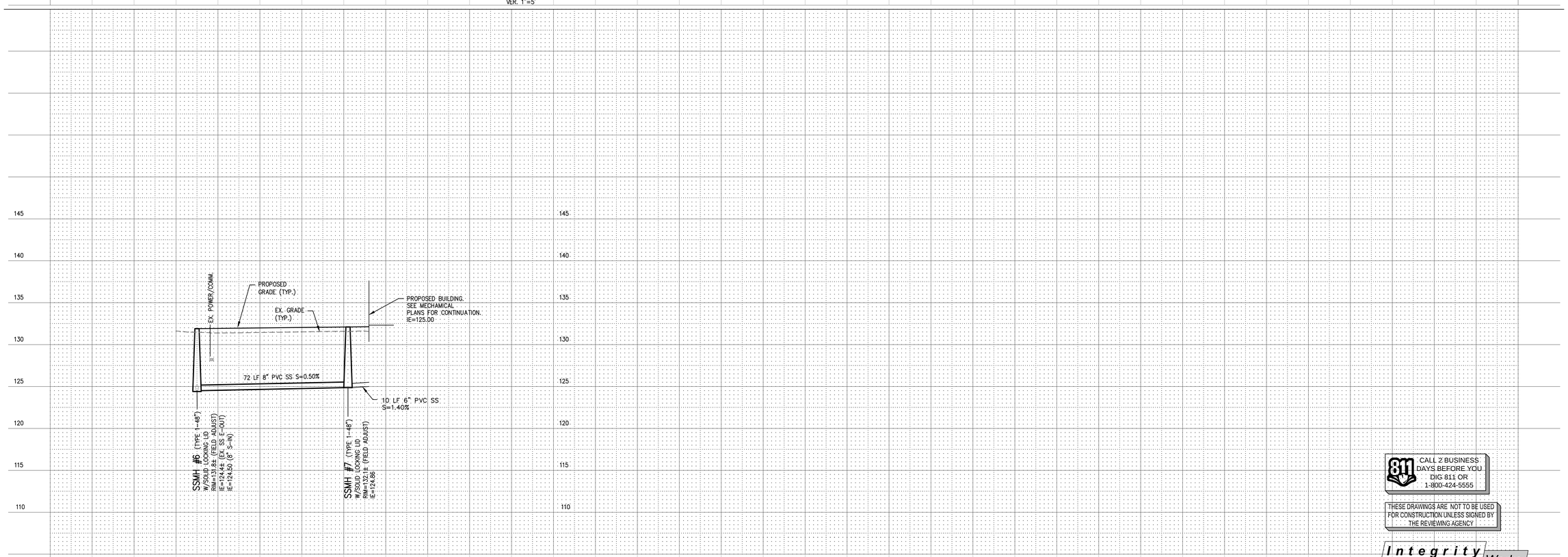

SANITARY SEWER PROFILE

SCALE: HOR. 1"=20'
VER. 1"=5'

CALL 2 BUSINESS DAYS BEFORE YOU DIG 811 OR 1-800-424-5555

THESE DRAWINGS ARE NOT TO BE USED FOR CONSTRUCTION UNLESS SIGNED BY THE REVIEWING AGENCY

Integrity Works
Consulting Engineers, LLC
170 W. Dayton St. Suite 204 Edmonds WA 98020
O: 425.967.7913 C: 206.920.9410

Cornerstone
ARCHITECTURAL GROUP
6161 NE 175th Street, Suite 101
Kenmore, Washington 98028
Phone: 206.682.5000
cornerstonearch.com

© Cornerstone Architectural Group

JOSEPH B. MOON
STATE OF WASHINGTON
38972
PROFESSIONAL ENGINEER
04/04/16

CLARK ELEMENTARY SCHOOL

ISSAQUAH SCHOOL DISTRICT
400 1st AVE. SE
ISSAQUAH, WASHINGTON 98027

PERMIT SET

SHEET TITLE: SANITARY SEWER PLAN AND PROFILE

DATE: 04-04-16 PROJECT NO. 191406

REVISIONS:

C8.03

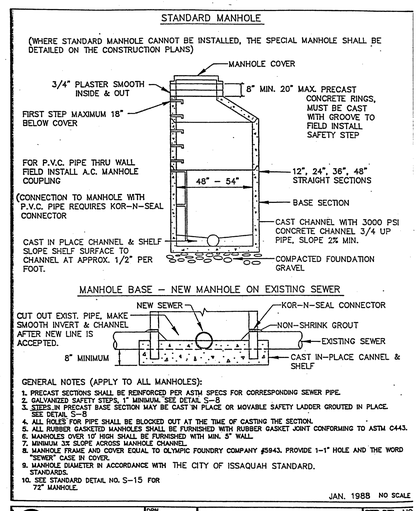

1 STANDARD MANHOLE/ NEW MANHOLE ON EXISTING SEWER
NOT TO SCALE

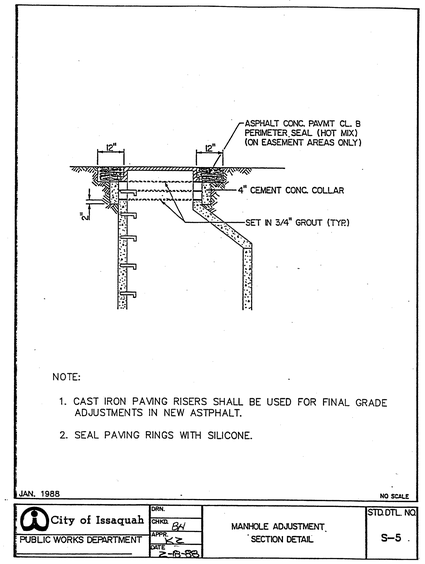

2 MANHOLE ADJUSTMENT SECTION DETAIL
NOT TO SCALE

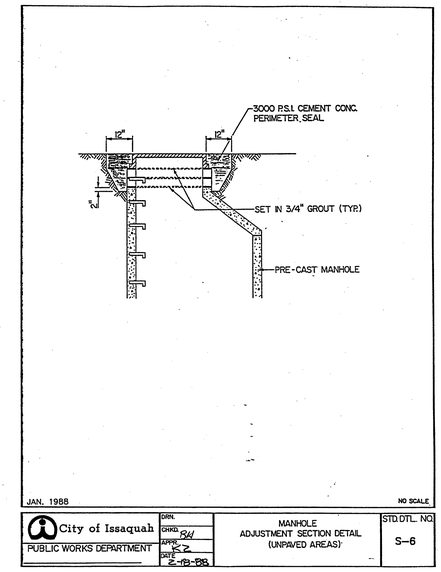

3 MANHOLE ADJUSTMENT SECTION DETAIL (UNPAVED AREAS)
NOT TO SCALE

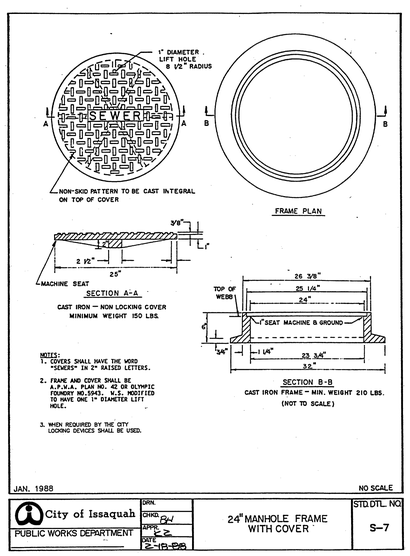

4 24" MANHOLE FRAME WITH COVER
NOT TO SCALE

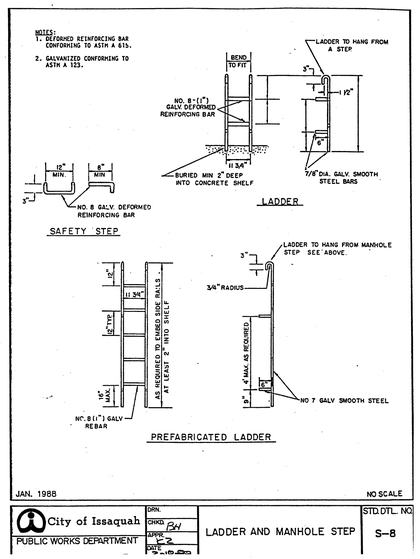

5 LADDER AND MANHOLE STEP
NOT TO SCALE

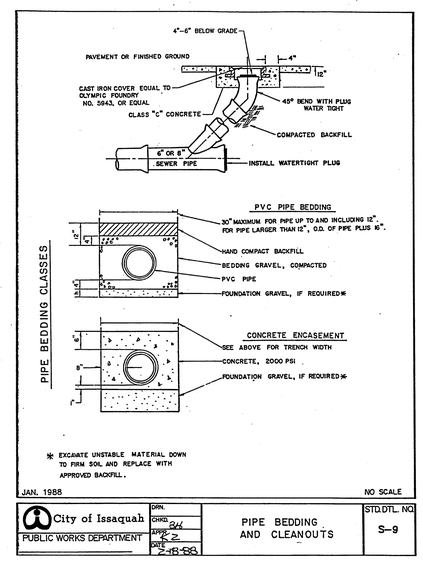

6 PIPE BEDDING AND CLEANOUTS
NOT TO SCALE

THESE DRAWINGS ARE NOT TO BE USED FOR CONSTRUCTION UNLESS SIGNED BY THE REVIEWING AGENCY

811 CALL 2 BUSINESS DAYS BEFORE YOU DIG 811 OR 1-800-424-5555

Integrity Works
Consulting Engineers, LLC
170 W. Dayton St. Suite 204 Edmonds WA 98020
O: 425.967.7913 C: 206.920.9410

Cornerstone
ARCHITECTURAL GROUP
6161 NE 175th Street, Suite 101
Kenmore, Washington 98028
Phone: 206.682.5000
cornerstonearch.com

© Cornerstone Architectural Group

JOSEPH B. MOON
STATE OF WASHINGTON
38972
REGISTERED PROFESSIONAL ENGINEER
04/04/16

CLARK ELEMENTARY SCHOOL
ISSAQUAH SCHOOL DISTRICT
400 1st AVE. SE
ISSAQUAH, WASHINGTON 98027

PERMIT SET

SHEET TITLE: SANITARY SEWER DETAILS

DATE: 04-04-16 PROJECT NO: 191406

REVISIONS:

C8.04

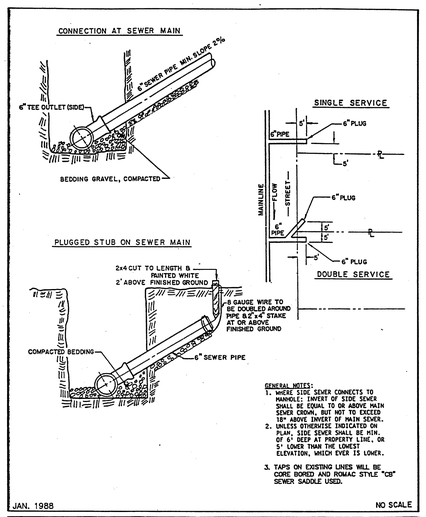

1 SIDE SEWER STUBS
NOT TO SCALE

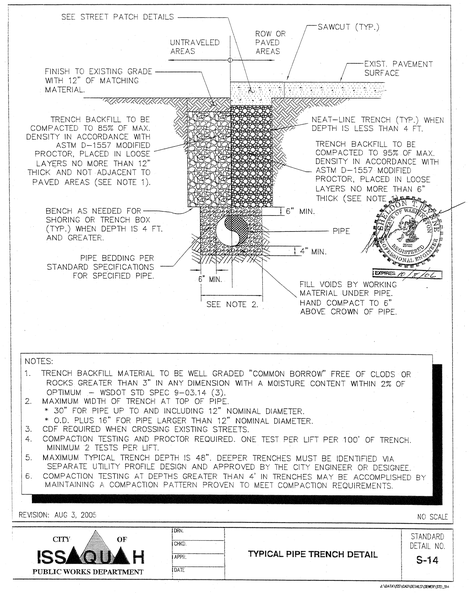

2 TYPICAL PIPE TRENCH DETAIL
NOT TO SCALE

3 NOT USED
NOT TO SCALE

4 NOT USED
NOT TO SCALE

5 NOT USED
NOT TO SCALE

6 NOT USED
NOT TO SCALE

THESE DRAWINGS ARE NOT TO BE USED FOR CONSTRUCTION UNLESS SIGNED BY THE REVIEWING AGENCY

811 CALL 2 BUSINESS DAYS BEFORE YOU DIG 811 OR 1-800-424-5555

Integrity Works
Consulting Engineers, LLC
170 W. Dayton St. Suite 204 Edmonds WA 98020
O: 425.967.7913 C: 206.920.9410

Cornerstone
ARCHITECTURAL GROUP
6161 NE 175th Street, Suite 101
Kenmore, Washington 98028
Phone: 206.682.5000
cornerstonearch.com

© Cornerstone Architectural Group

JOSEPH B. MOON
STATE OF WASHINGTON
38972
REGISTERED PROFESSIONAL ENGINEER
04/04/16

CLARK ELEMENTARY SCHOOL
ISSAQUAH SCHOOL DISTRICT
400 1st AVE. SE
ISSAQUAH, WASHINGTON 98027

PERMIT SET

SHEET TITLE: SANITARY SEWER DETAILS

DATE: 04-04-16 PROJECT NO: 191406

REVISIONS:

C8.05

SW1/4, NW1/4, SEC. 34, TWP. 24N, RGE 6E., W.M.

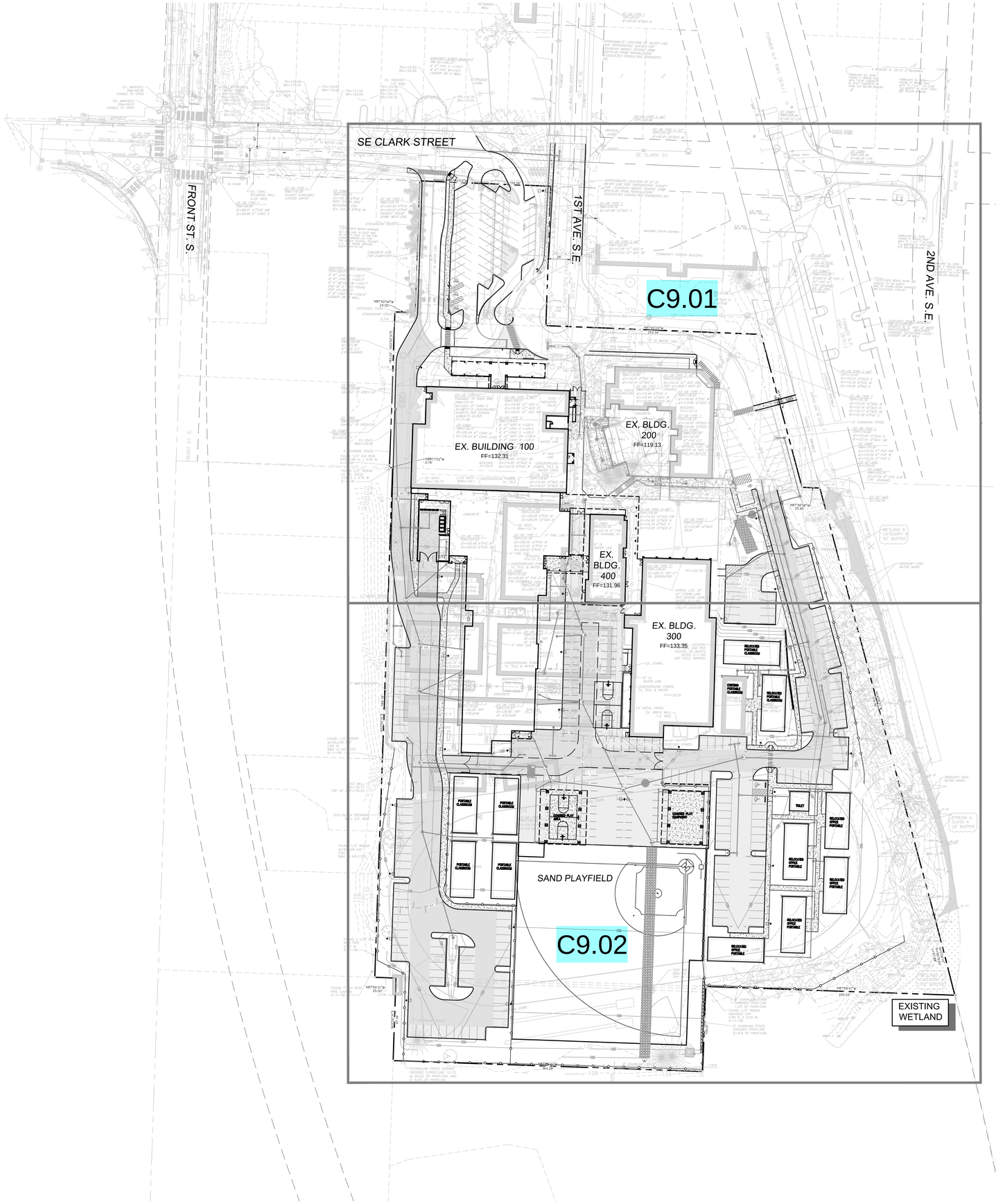

GRAPHIC SCALE
0 25 50 100 FEET
1" = 50 FEET

CALL 2 BUSINESS DAYS BEFORE YOU DIG 811 OR 1-800-424-5555

THESE DRAWINGS ARE NOT TO BE USED FOR CONSTRUCTION UNLESS SIGNED BY THE REVIEWING AGENCY

Integrity Works
Consulting Engineers, LLC
170 W. Dayton St. Suite 204 Edmonds WA 98020
O: 425.967.7913 C: 206.920.9410

Cornerstone
ARCHITECTURAL GROUP
6161 NE 175th Street, Suite 101
Kenmore, Washington 98028
Phone: 206.682.5000
cornerstonearch.com

© Cornerstone Architectural Group

JOSEPH B. MOON
STATE OF WASHINGTON
38972
PROFESSIONAL ENGINEER
04/04/16

CLARK ELEMENTARY SCHOOL
ISSAQUAH SCHOOL DISTRICT
400 1st AVE. SE
ISSAQUAH, WASHINGTON 98027

PERMIT SET

SHEET TITLE: HORIZ. CONTROL AND PAVING OVERVIEW PLAN

DATE: 04-04-16 PROJECT NO: 191406

REVISIONS:

C9.00

SW1/4, NW1/4, SEC. 34, TWP. 24N, RGE 6E., W.M.

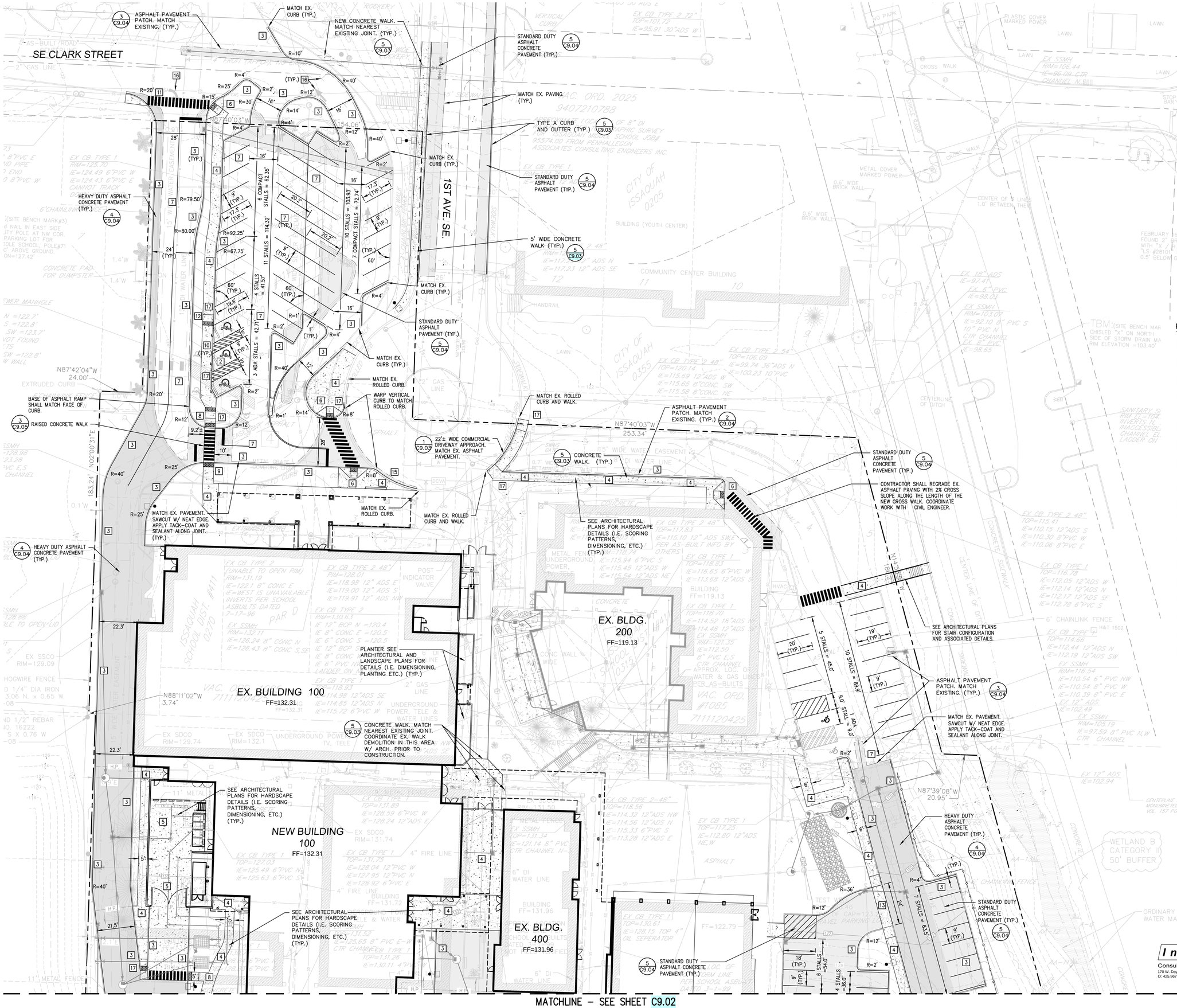

PAVING KEY NOTES

1. 1' WIDE CONCRETE STRIP. (2/C9.05)
2. CONCRETE WHEEL STOPS (TYP.) (5/C9.05)
3. CONCRETE VERTICAL CURB (TYP.) (5/C9.03)
4. CONCRETE WALK. SEE ARCH. PLANS FOR SCORING PATTERN (TYP.) (5/C9.03)
5. CONCRETE PAVEMENT (TYP.) (1/C9.05)
6. CURB RAMP (TYP.) (3/C9.06)
7. PROVIDE ASPHALT SEALCOAT WITHIN LIMITS OF SCHOOL PROPERTY. SEE PROJECT SPECIFICATIONS FOR DETAILS.
8. CURB RAMP W/O CURB (TYP.) (1/C9.06)
9. DETECTABLE WARNING PATTERN. (3/C9.06)
10. CONCRETE CURB SHALL BE FLUSH WITH ASPHALT PAVEMENT AND CONCRETE WALK FOR BARRIER-FREE PARKING SPACES.
11. CONSTRUCT CONCRETE CURB AND WALK FLUSH WITH ASPHALT PAVING. MATCH EX. DRIVEWAY TO THE WEST. COORDINATE WORK WITH CIVIL ENGINEER.
12. CURB RAMP (TYP.) (1/C9.06)
13. CONCRETE DRIVEWAY APRON (1/C9.03)
14. CONCRETE CURB SHALL BE FLUSH WITH ASPHALT PAVEMENT AND SAND SURFACING.
15. CONCRETE ROLLED CURB. (5/C9.03)
16. APPLY BLACK PAINT OVER EX. PAVEMENT MARKINGS AS NECESSARY.
17. PRIOR TO CONSTRUCTION, COORDINATE CONCRETE WALK AND CURB CONSTRUCTION IN THIS AREA WITH CIVIL ENGINEER.

PAVING LEGEND

- STANDARD DUTY ASPHALT CONCRETE PAVEMENT (5/C9.04)
- HEAVY DUTY ASPHALT CONCRETE PAVEMENT (4/C9.04)
- CEMENT CONCRETE PAVEMENT

CALL 2 BUSINESS DAYS BEFORE YOU DIG 811 OR 1-800-424-5555

THESE DRAWINGS ARE NOT TO BE USED FOR CONSTRUCTION UNLESS SIGNED BY THE REVIEWING AGENCY

Integrity Works
Consulting Engineers, LLC
170 W. Dayton St. Suite 204 Edmonds WA 98020
O: 425.967.7913 C: 206.920.9410

Cornerstone ARCHITECTURAL GROUP
6161 NE 175th Street, Suite 101
Kenmore, Washington 98028
Phone: 206.682.5000
cornerstonearch.com

© Cornerstone Architectural Group

JOSEPH B. MOON STATE OF WASHINGTON 38972 PROFESSIONAL ENGINEER 04/28/16

CLARK ELEMENTARY SCHOOL
ISSAQUAH SCHOOL DISTRICT
400 1st AVE. SE
ISSAQUAH, WASHINGTON 98027

PERMIT SET

SHEET TITLE: HORIZ. CONTROL AND PAVING PLAN

DATE: 04-28-16 PROJECT NO: 191406

REVISIONS:

C9.01

MATCHLINE – SEE SHEET C9.01

SW1/4, NW1/4, SEC. 34, TWP. 24N, RGE 6E., W.M.

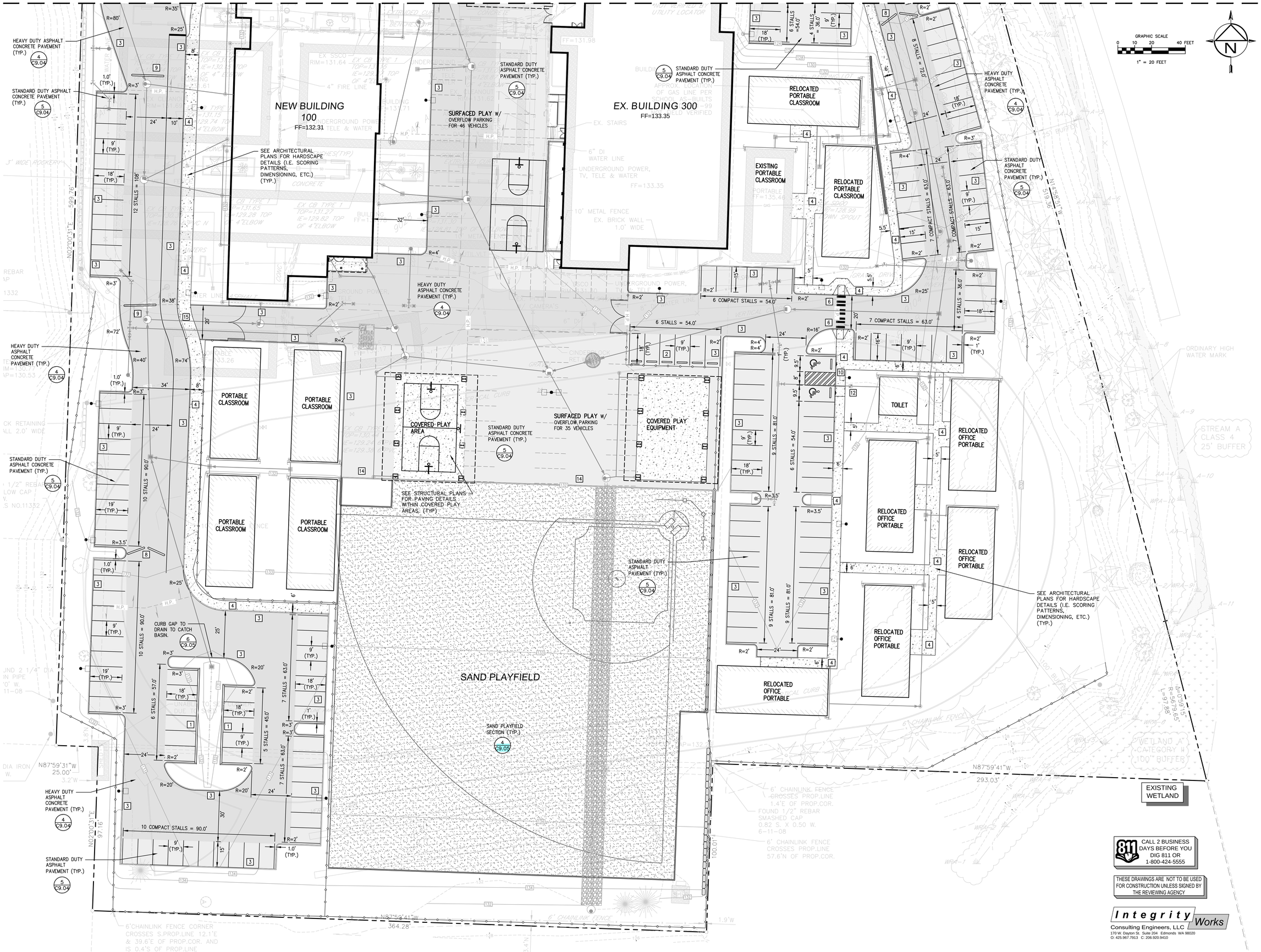

CALL 2 BUSINESS DAYS BEFORE YOU DIG 811 OR 1-800-424-5555

THESE DRAWINGS ARE NOT TO BE USED FOR CONSTRUCTION UNLESS SIGNED BY THE REVIEWING AGENCY

Integrity Works
Consulting Engineers, LLC
170 W. Dayton St. Suite 204 Edmonds WA 98020
O: 425.967.7913 C: 206.920.9410

Cornerstone
ARCHITECTURAL GROUP
6161 NE 175th Street, Suite 101
Kenmore, Washington 98028
Phone: 206.682.5000
cornerstonearch.com

© Cornerstone Architectural Group

JOSEPH B. MOON
STATE OF WASHINGTON
38972
PROFESSIONAL ENGINEER
04/04/16

CLARK ELEMENTARY SCHOOL
ISSAQUAH SCHOOL DISTRICT
400 1st AVE. SE
ISSAQUAH, WASHINGTON 98027

PERMIT SET

SHEET TITLE: HORIZ. CONTROL AND PAVING

DATE: 04-04-16 PROJECT NO: 191406

REVISIONS:

C9.02

GENERAL PAVING NOTES

1. ALL CURBS, PAVEMENTS, SIDEWALKS, DITCHES, AND MANHOLES SHALL BE CLEANED OF DIRT AND DEBRIS.
2. ALL FRAMES, COVERS, AND VALVE BOXES SHALL BE ADJUSTED TO FINAL GRADE.
3. FINAL PAVING SHALL NOT COMMENCE UNTIL ALL UTILITIES UNDER PAVED AREAS ARE INSTALLED AND APPROVED.
4. ASPHALT PAVING SHALL NOT BE PLACED PRIOR TO BASE COURSE AND SUBGRADE APPROVAL BY THE GEOTECHNICAL ENGINEER.
5. PROVIDE POSITIVE DRAINAGE OF ALL AREAS DISTURBED BY CONSTRUCTION. MINIMUM SLOPE IN PAVED AREAS IS 1 PERCENT. MINIMUM SLOPE IN LANDSCAPE AREAS IS 2 PERCENT UNLESS OTHERWISE NOTED. MAXIMUM SLOPE ON EARTH BANKS IS 2(H):1(V).
6. WHEN TYING INTO EXISTING PAVEMENT, SAW CUT EXISTING PAVING WITH CLEAN, STRAIGHT AND VERTICAL JOINT. WHEN REMOVING EXISTING CURB OR SIDEWALK, REMOVE TO THE NEAREST JOINT.
7. SEE ARCHITECTURAL PLANS FOR CONCRETE WALK FINISH AND JOINT/SCORING PATTERNS.
8. SEE LANDSCAPE AND ELECTRICAL PLANS FOR LOCATIONS OF SLEEVES AND CONDUITS. CONTRACTOR SHALL COORDINATE TIMING OF SLEEVE INSTALLATION WITH PAVING CONTRACTOR. TRENCHING THROUGH NEW PAVEMENT SHALL NOT BE ALLOWED.
9. ALL PARKING STALL STRIPES SHALL BE 4 INCH WIDE SOLID WHITE.

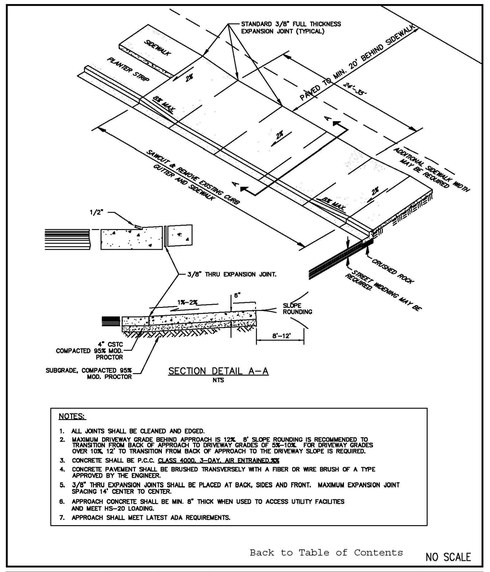

NOTES:

1. ALL JOINTS SHALL BE CLEANED AND EDGED.
2. MAXIMUM DRIVEWAY GRADE BEHIND APPROACH IS 12%. 8' SLOPE ROUNDING IS RECOMMENDED TO TRANSITION FROM BACK OF APPROACH TO DRIVEWAY GRADES OF 5%-10%. FOR DRIVEWAY GRADES OVER 10%, 12' TO TRANSITION FROM BACK OF APPROACH TO THE DRIVEWAY SLOPE IS REQUIRED.
3. CONCRETE SHALL BE P.C.C. CLASS 4000, 3-DAY, AIR ENTRAINED.
4. CONCRETE PAVEMENT SHALL BE BRUSHED TRANSVERSELY WITH A FIBER OR WIRE BRUSH OF A TYPE APPROVED BY THE ENGINEER.
5. 3/8" THRU EXPANSION JOINTS SHALL BE PLACED AT BACK, SIDES AND FRONT. MAXIMUM EXPANSION JOINT SPACING 14' CENTER TO CENTER.
6. APPROACH CONCRETE SHALL BE MIN. 8" THICK WHEN USED TO ACCESS UTILITY FACILITIES AND MEET HS-20 LOADING.
7. APPROACH SHALL MEET LATEST ADA REQUIREMENTS.

Back to Table of Contents

NO SCALE

CITY OF ISSAQUAH PUBLIC WORKS DEPARTMENT — AUGUST 2010 — COMMERCIAL DRIVEWAY APPROACH WITH PLANTER STRIP — STANDARD DETAIL NO. T-06 — REV:

NOTE: THE ORIGINAL IS SIGNED BY THE ENGINEER, APPROVED FOR PUBLICATION AND FILED AT THE CITY OF ISSAQUAH PUBLIC WORKS ENGINEERING OFFICE.

1 COMMERCIAL DRIVEWAY APPROACH WITHOUT PLANTER STRIP
NOT TO SCALE

2 NOT USED
NOT TO SCALE

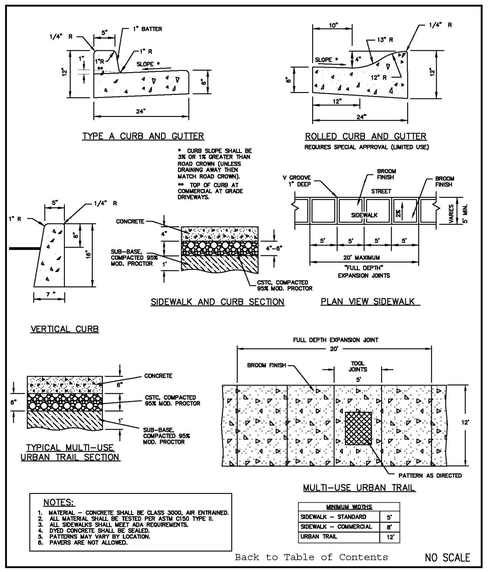

NOTES:

1. MATERIAL - CONCRETE SHALL BE CLASS 3000, AIR ENTRAINED.
2. ALL MATERIAL SHALL BE TESTED PER ASTM C150 TYPE 5.
3. ALL MATERIALS SHALL MEET ADA REQUIREMENTS.
4. DYED CONCRETE SHALL BE SEALED.
5. PATTERNS MAY VARY BY LOCATION.
6. PAVERS ARE NOT ALLOWED.

MINIMUM WIDTHS	
SIDEWALK - STANDARD	5'
SIDEWALK - COMMERCIAL	8'
URBAN TRAIL	12'

Back to Table of Contents

NO SCALE

CITY OF ISSAQUAH PUBLIC WORKS DEPARTMENT — AUGUST 2010 — SIDEWALKS/CURBS/URBAN TRAILS — STANDARD DETAIL NO. T-38 — REV:

NOTE: THE ORIGINAL IS SIGNED BY THE ENGINEER, APPROVED FOR PUBLICATION AND FILED AT THE CITY OF ISSAQUAH PUBLIC WORKS ENGINEERING OFFICE.

5 SIDEWALKS/ CURBS/ URBAN TRAILS
NOT TO SCALE

3 NOT USED
NOT TO SCALE

4 NOT USED
NOT TO SCALE

THESE DRAWINGS ARE NOT TO BE USED FOR CONSTRUCTION UNLESS SIGNED BY THE REVIEWING AGENCY

811 CALL 2 BUSINESS DAYS BEFORE YOU DIG 811 OR 1-800-424-5555

Integrity Works
Consulting Engineers, LLC
170 W. Dayton St. Suite 204 Edmonds WA 98020
O: 425.967.7913 C: 206.920.9410

Cornerstone ARCHITECTURAL GROUP
6161 NE 175th Street, Suite 101
Kenmore, Washington 98028
Phone: 206.682.5000
cornerstonearch.com

© Cornerstone Architectural Group

JOSEPH B. MOON — STATE OF WASHINGTON — 36972 — PROFESSIONAL ENGINEER
04/04/16

CLARK ELEMENTARY SCHOOL
ISSAQUAH SCHOOL DISTRICT
400 1st AVE. SE
ISSAQUAH, WASHINGTON 98027

PERMIT SET
SHEET TITLE: PAVING DETAILS
DATE: 04-04-16 PROJECT NO: 191406
REVISIONS:

C9.03

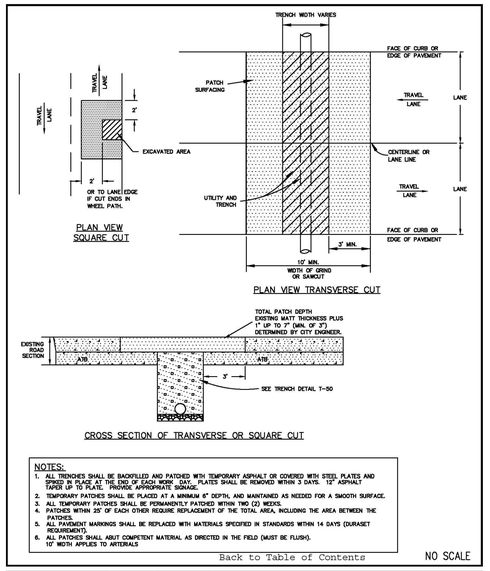

NOTES:
1. ALL TRENCHES SHALL BE BACKFILLED AND PATCHED WITH TEMPORARY ASPHALT OR COVERED WITH STEEL PLATES AND SPIKED IN PLACE AT THE END OF EACH WORK DAY. PLATES SHALL BE REMOVED WITHIN 3 DAYS. 12" ASPHALT TAPER UP TO PLATE. PROVIDE APPROPRIATE SIGNAGE.
2. TEMPORARY PATCHES SHALL BE PLACED AT A MINIMUM 6" DEPTH, AND MAINTAINED AS NEEDED FOR A SMOOTH SURFACE.
3. ALL TEMPORARY PATCHES SHALL BE PERMANENTLY PATCHED WITHIN TWO (2) WEEKS.
4. PATCHES WITHIN 20' OF EACH OTHER REQUIRE REPLACEMENT OF THE TOTAL AREA, INCLUDING THE AREA BETWEEN THE PATCHES.
5. ALL PAVEMENT MARKINGS SHALL BE REPLACED WITH MATERIALS SPECIFIED IN STANDARDS WITHIN 14 DAYS (DURASET REQUIREMENTS.
6. ALL PATCHES SHALL ABUT COMPETENT MATERIAL AS DIRECTED IN THE FIELD (MUST BE FLUSH).
10' WIDTH APPLIES TO ARTERIALS

Back to Table of Contents NO SCALE

CITY OF ISSAQUAH PUBLIC WORKS DEPARTMENT AUGUST 2010 | PATCHING FLEXIBLE PAVEMENTS TRANSVERSE OR SQUARE CUTS | STANDARD DETAIL NO. T-48 | REV:

NOTE: THE ORIGINAL IS SIGNED BY THE ENGINEER, APPROVED FOR PUBLICATION AND FILED IN THE CITY OF ISSAQUAH PUBLIC WORKS ENGINEERING OFFICE.

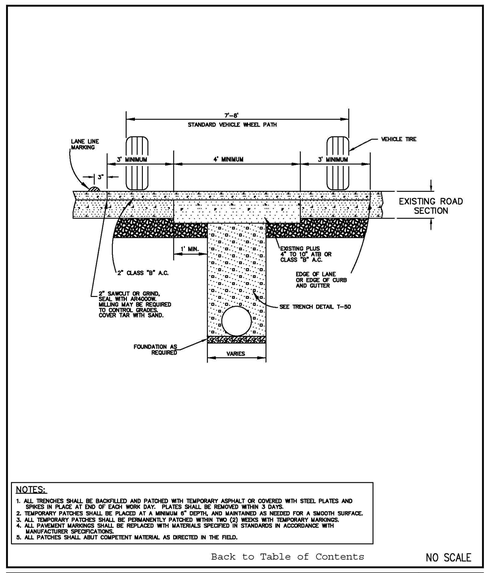

NOTES:
1. ALL TRENCHES SHALL BE BACKFILLED AND PATCHED WITH TEMPORARY ASPHALT OR COVERED WITH STEEL PLATES AND SPIKED IN PLACE AT END OF EACH WORK DAY. PLATES SHALL BE REMOVED WITHIN 3 DAYS.
2. TEMPORARY PATCHES SHALL BE PLACED AT A MINIMUM 6" DEPTH, AND MAINTAINED AS NEEDED FOR A SMOOTH SURFACE.
3. ALL TEMPORARY PATCHES SHALL BE PERMANENTLY PATCHED WITHIN TWO (2) WEEKS WITH TEMPORARY MARKINGS.
4. ALL PAVEMENT MARKINGS SHALL BE REPLACED WITH MATERIALS SPECIFIED IN STANDARDS IN ACCORDANCE WITH MANUFACTURER SPECIFICATIONS.
5. ALL PATCHES SHALL ABUT COMPETENT MATERIAL AS DIRECTED IN THE FIELD.

Back to Table of Contents NO SCALE

CITY OF ISSAQUAH PUBLIC WORKS DEPARTMENT AUGUST 2010 | PATCHING FLEXIBLE PAVEMENTS LONGITUDINAL CUTS | STANDARD DETAIL NO. T-49 | REV:

NOTE: THE ORIGINAL IS SIGNED BY THE ENGINEER, APPROVED FOR PUBLICATION AND FILED IN THE CITY OF ISSAQUAH PUBLIC WORKS ENGINEERING OFFICE.

1 NOT USED
NOT TO SCALE

2 PATCHING FLEXIBLE PAVEMENTS TRANSVERSE OR SQUARE CUTS
NOT TO SCALE

3 PATCHING FLEXIBLE PAVEMENTS LONGITUDINAL CUTS
NOT TO SCALE

NOTES:
1. DEPTHS ARE COMPACTED THICKNESS.
2. WHERE ATB IS USED FOR CONSTRUCTION ACCESS AND STAGING, SOME RUTTING AND DISTURBANCE OF THE ATB SURFACE MAY OCCUR. THE CONTRACTOR SHALL REMOVE AFFECTED AREAS AND REPLACE THEM WITH PROPERLY COMPACTED ATB PRIOR TO FINAL SURFACING.

4 HEAVY DUTY ASPHALT CONCRETE PAVEMENT
NOT TO SCALE

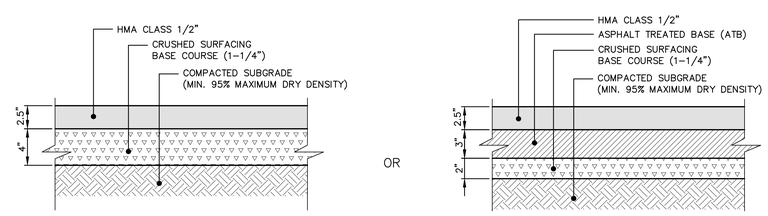

NOTES:
1. DEPTHS ARE COMPACTED THICKNESS.
2. WHERE ATB IS USED FOR CONSTRUCTION ACCESS AND STAGING, SOME RUTTING AND DISTURBANCE OF THE ATB SURFACE MAY OCCUR. THE CONTRACTOR SHALL REMOVE AFFECTED AREAS AND REPLACE THEM WITH PROPERLY COMPACTED ATB PRIOR TO FINAL SURFACING.

5 STANDARD DUTY ASPHALT CONCRETE PAVEMENT
NOT TO SCALE

THESE DRAWINGS ARE NOT TO BE USED FOR CONSTRUCTION UNLESS SIGNED BY THE REVIEWING AGENCY

811 CALL 2 BUSINESS DAYS BEFORE YOU DIG 811 OR 1-800-424-5555

Integrity Works
Consulting Engineers, LLC
170 W. Dayton St. Suite 204 Edmonds WA 98020
O: 425.967.7913 C: 206.920.9410

Cornerstone ARCHITECTURAL GROUP
6161 NE 175th Street, Suite 101
Kenmore, Washington 98028
Phone: 206.652.5000
cornerstonearch.com

© Cornerstone Architectural Group

JOSEPH B. MOORE STATE OF WASHINGTON 38972 PROFESSIONAL ENGINEER
04/04/16

CLARK ELEMENTARY SCHOOL
ISSAQUAH SCHOOL DISTRICT
400 1st AVE. SE
ISSAQUAH, WASHINGTON 98027

PERMIT SET
SHEET TITLE: PAVING DETAILS
DATE: 04-04-16 PROJECT NO: 191406
REVISIONS:

C9.04

1 NOT USED
NOT TO SCALE

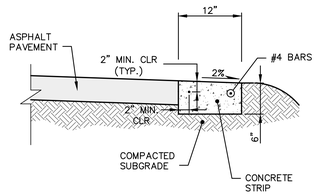

NOTE
CEMENT CONCRETE SHALL BE CLASS 4000.

2 CONCRETE STRIP
NOT TO SCALE

3 NOT USED
NOT TO SCALE

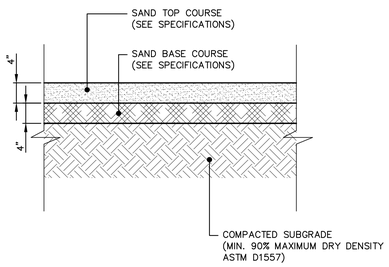

4 SAND PLAYFIELD SECTION
NOT TO SCALE

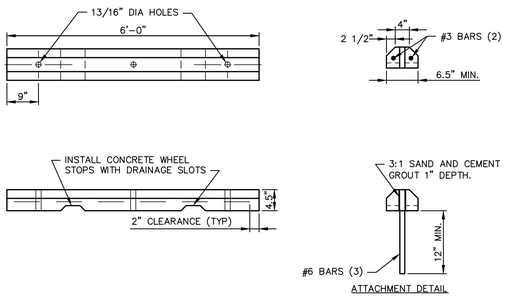

5 CONCRETE WHEEL STOP
NOT TO SCALE

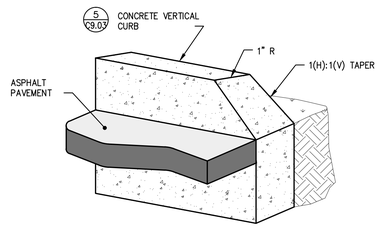

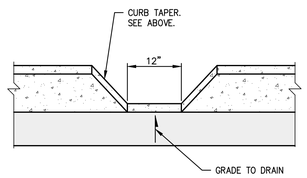

6 CURB GAP
NOT TO SCALE

THESE DRAWINGS ARE NOT TO BE USED FOR CONSTRUCTION UNLESS SIGNED BY THE REVIEWING AGENCY

811 CALL 2 BUSINESS DAYS BEFORE YOU DIG 811 OR 1-800-424-5555

Integrity Works
Consulting Engineers, LLC
170 W. Dayton St. Suite 204 Edmonds WA 98020
O: 425.967.7913 C: 206.920.9410

Cornerstone
ARCHITECTURAL GROUP
6161 NE 175th Street, Suite 101
Kenmore, Washington 98028
Phone: 206.652.5000
cornerstonearch.com

© Cornerstone Architectural Group

JOSEPH B. MOORE
STATE OF WASHINGTON
38972
PROFESSIONAL ENGINEER
01/25/16

GIBSON EK HIGH SCHOOL
ISSAQUAH SCHOOL DISTRICT
400 1st AVE. SE
ISSAQUAH, WASHINGTON 98027

SHEET TITLE: PAVING DETAILS
PROJECT NO: 191406
DATE: 01-25-16
REVISIONS:

C9.05

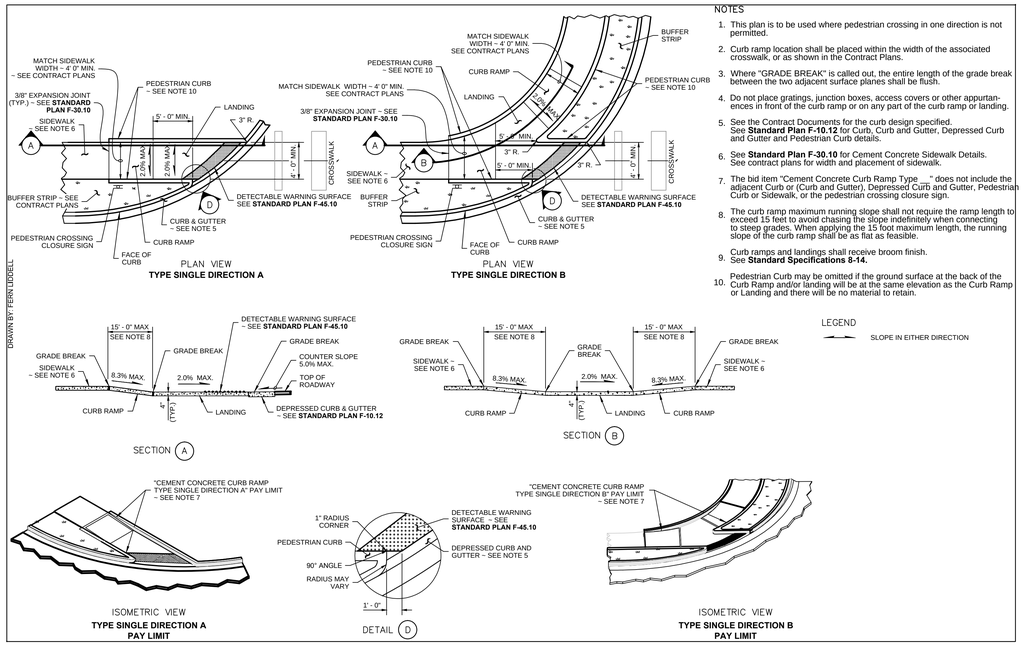

1 CURB RAMP – SINGLE DIRECITION
NOT TO SCALE

2 NOT USED
NOT TO SCALE

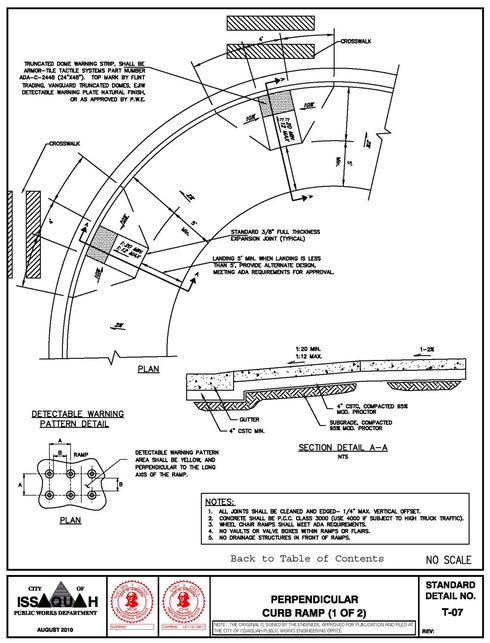

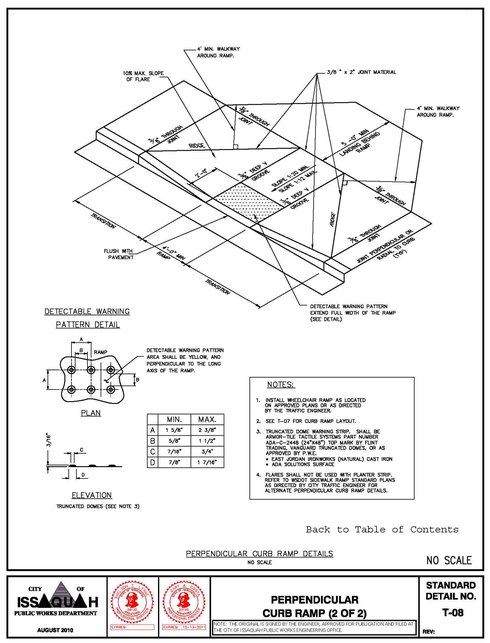

3 PERPENDICULAR CURB RAMP
NOT TO SCALE

4 NOT USED
NOT TO SCALE

THESE DRAWINGS ARE NOT TO BE USED FOR CONSTRUCTION UNLESS SIGNED BY THE REVIEWING AGENCY

CALL 2 BUSINESS DAYS BEFORE YOU DIG 811 OR 1-800-424-5555

Integrity Works
Consulting Engineers, LLC
170 W. Dayton St. Suite 204 Edmonds WA 98020
O: 425.967.7913 C: 206.920.9410

Cornerstone ARCHITECTURAL GROUP
6161 NE 175th Street, Suite 101
Kenmore, Washington 98028
Phone: 206.682.5000
cornerstonearch.com

© Cornerstone Architectural Group

JOSEPH B. MOON STATE OF WASHINGTON 36922 REGISTERED PROFESSIONAL ENGINEER
04/04/16

CLARK ELEMENTARY SCHOOL
ISSAQUAH SCHOOL DISTRICT
400 1st AVE. SE
ISSAQUAH, WASHINGTON 98027

PERMIT SET
SHEET TITLE: PAVING DETAILS
DATE: 04-04-16
PROJECT NO: 191406
REVISIONS:

C9.06

SW1/4, NW1/4, SEC. 34, TWP. 24N, RGE 6E., W.M.

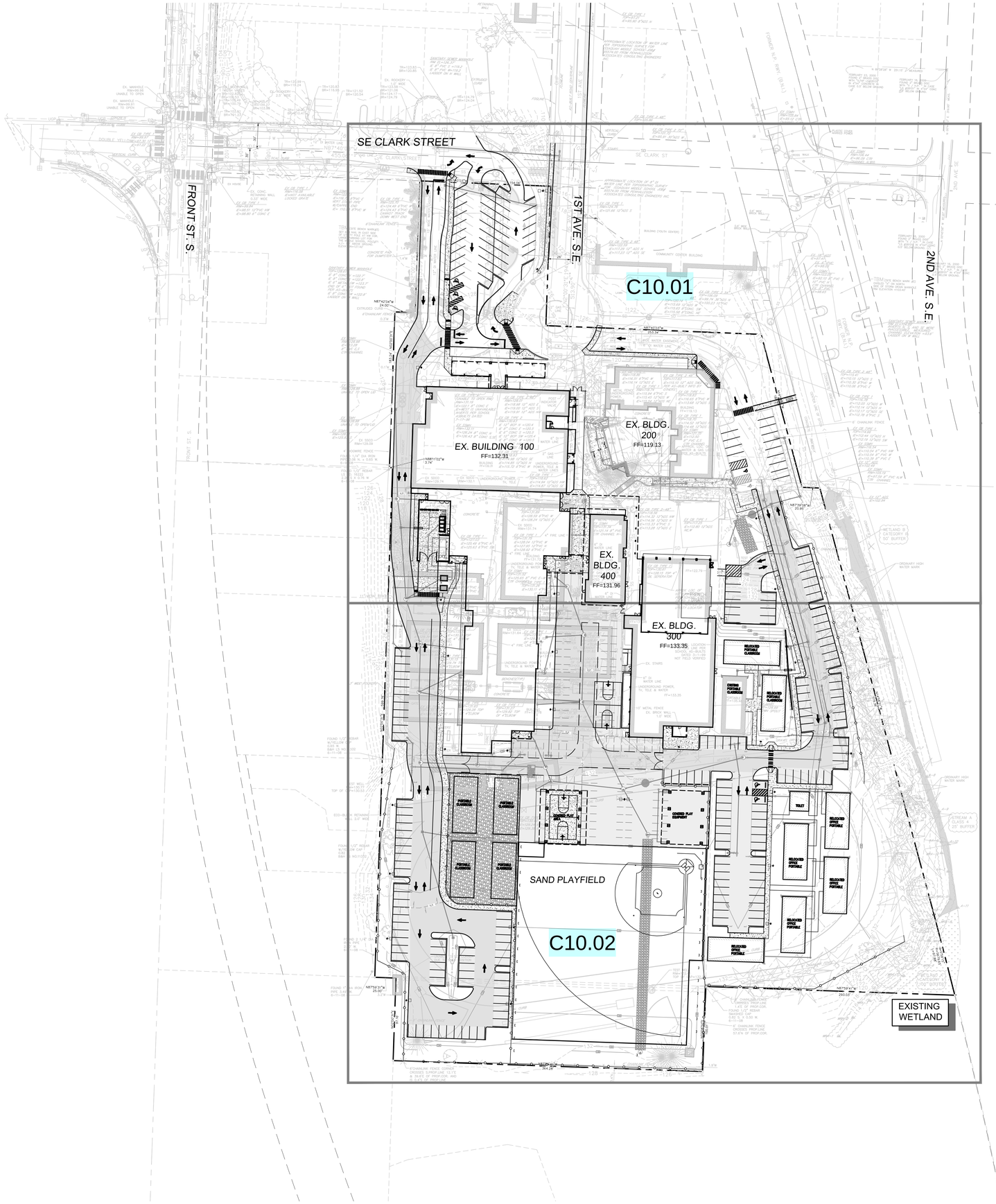

N

GRAPHIC SCALE
0 25 50 100 FEET
1" = 50 FEET

Cornerstone
ARCHITECTURAL GROUP
6161 NE 175th Street, Suite 101
Kenmore, Washington 98028
Phone: 206.682.5000
cornerstonearch.com

© Cornerstone Architectural Group

JOSEPH B. MOORE
STATE OF WASHINGTON
38972
PROFESSIONAL ENGINEER
04/28/16

CLARK ELEMENTARY SCHOOL
ISSAQUAH SCHOOL DISTRICT
400 1st AVE. SE
ISSAQUAH, WASHINGTON 98027

CALL 2 BUSINESS DAYS BEFORE YOU DIG 811 OR 1-800-424-5555

THESE DRAWINGS ARE NOT TO BE USED FOR CONSTRUCTION UNLESS SIGNED BY THE REVIEWING AGENCY

PERMIT SET

SHEET TITLE: STRIPING AND SIGNAGE OVERVIEW PLAN

DATE: 04-28-16 PROJECT NO: 191406

REVISIONS:

Integrity Works
Consulting Engineers, LLC
170 W. Dayton St. Suite 204 Edmonds WA 98020
O: 425.967.7913 C: 206.920.9410

C10.00

SW1/4, NW1/4, SEC. 34, TWP. 24N, RGE 6E., W.M.

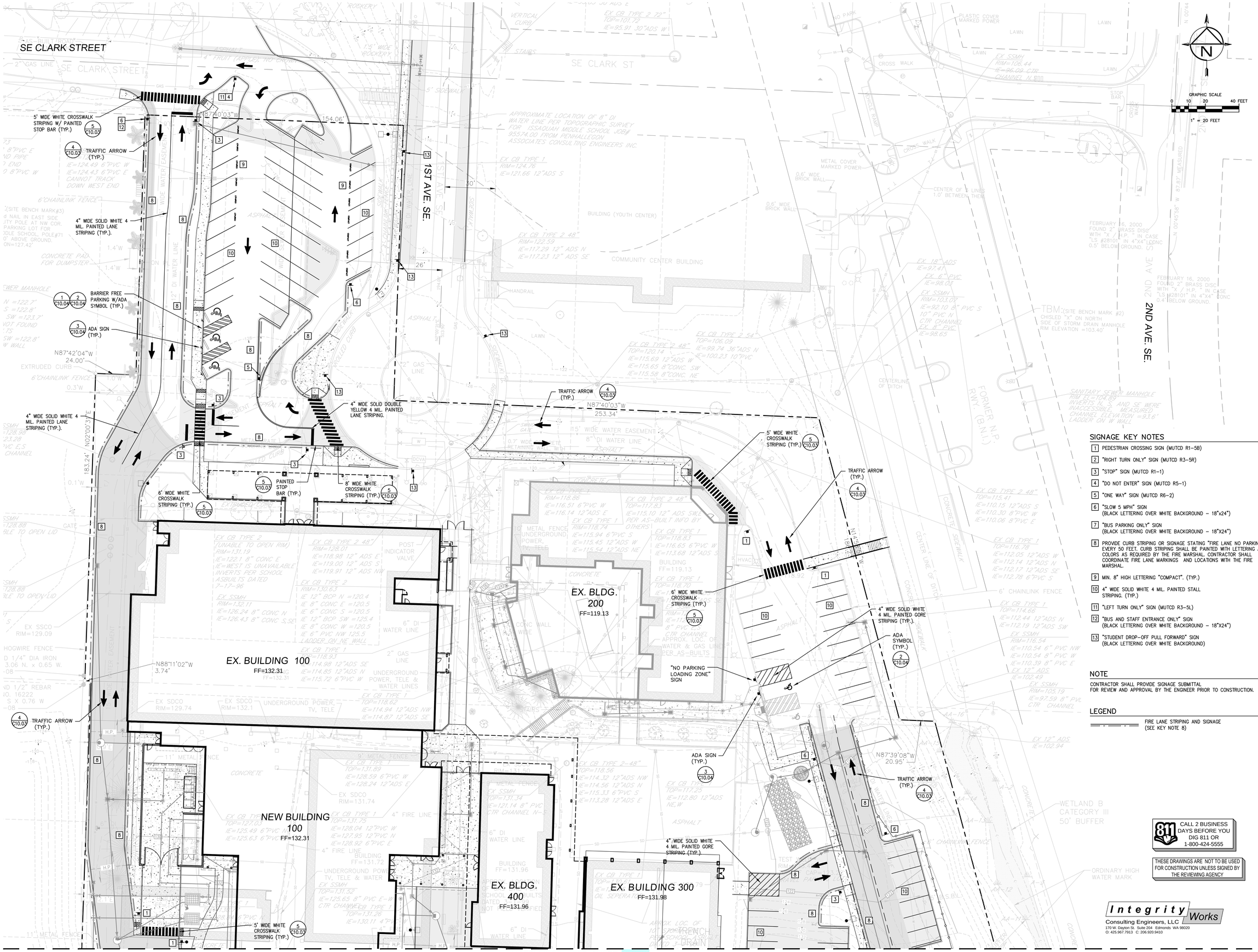

SIGNAGE KEY NOTES

1. PEDESTRIAN CROSSING SIGN (MUTCD R1-5B)
2. "RIGHT TURN ONLY" SIGN (MUTCD R3-5R)
3. "STOP" SIGN (MUTCD R1-1)
4. "DO NOT ENTER" SIGN (MUTCD R5-1)
5. "ONE WAY" SIGN (MUTCD R6-2)
6. "SLOW 5 MPH" SIGN (BLACK LETTERING OVER WHITE BACKGROUND - 18"x24")
7. "BUS PARKING ONLY" SIGN (BLACK LETTERING OVER WHITE BACKGROUND - 18"x24")
8. PROVIDE CURB STRIPING OR SIGNAGE STATING "FIRE LANE NO PARKING" EVERY 50 FEET. CURB STRIPING SHALL BE PAINTED WITH LETTERING AND COLORS AS REQUIRED BY THE FIRE MARSHAL. CONTRACTOR SHALL COORDINATE FIRE LANE MARKINGS AND LOCATIONS WITH THE FIRE MARSHAL.
9. MIN. 8" HIGH LETTERING "COMPACT". (TYP.)
10. 4" WIDE SOLID WHITE 4 MIL. PAINTED STALL STRIPING. (TYP.)
11. "LEFT TURN ONLY" SIGN (MUTCD R3-5L)
12. "BUS AND STAFF ENTRANCE ONLY" SIGN (BLACK LETTERING OVER WHITE BACKGROUND - 18"X24")
13. "STUDENT DROP-OFF PULL FORWARD" SIGN (BLACK LETTERING OVER WHITE BACKGROUND)

NOTE

CONTRACTOR SHALL PROVIDE SIGNAGE SUBMITTAL FOR REVIEW AND APPROVAL BY THE ENGINEER PRIOR TO CONSTRUCTION.

LEGEND

FIRE LANE STRIPING AND SIGNAGE (SEE KEY NOTE 8)

CALL 2 BUSINESS DAYS BEFORE YOU DIG 811 OR 1-800-424-5555

THESE DRAWINGS ARE NOT TO BE USED FOR CONSTRUCTION UNLESS SIGNED BY THE REVIEWING AGENCY

Integrity Works
Consulting Engineers, LLC
170 W. Dayton St. Suite 204 Edmonds WA 98020
O: 425.967.7913 C: 206.920.9410

Cornerstone
ARCHITECTURAL GROUP
6161 NE 175th Street, Suite 101
Kenmore, Washington 98028
Phone: 206.682.5000
cornerstonearch.com

© Cornerstone Architectural Group

JOSEPH B. MOON
STATE OF WASHINGTON
38972
PROFESSIONAL ENGINEER
04/28/16

CLARK ELEMENTARY SCHOOL
ISSAQUAH SCHOOL DISTRICT
400 1st AVE. SE
ISSAQUAH, WASHINGTON 98027

PERMIT SET
SHEET TITLE: HORIZ. CONTROL AND PAVING PLAN
DATE: 04-28-16
PROJECT NO: 191406
REVISIONS:

C10.01

MATCHLINE – SEE SHEET C10.01

SW1/4, NW1/4, SEC. 34, TWP. 24N, RGE 6E., W.M.

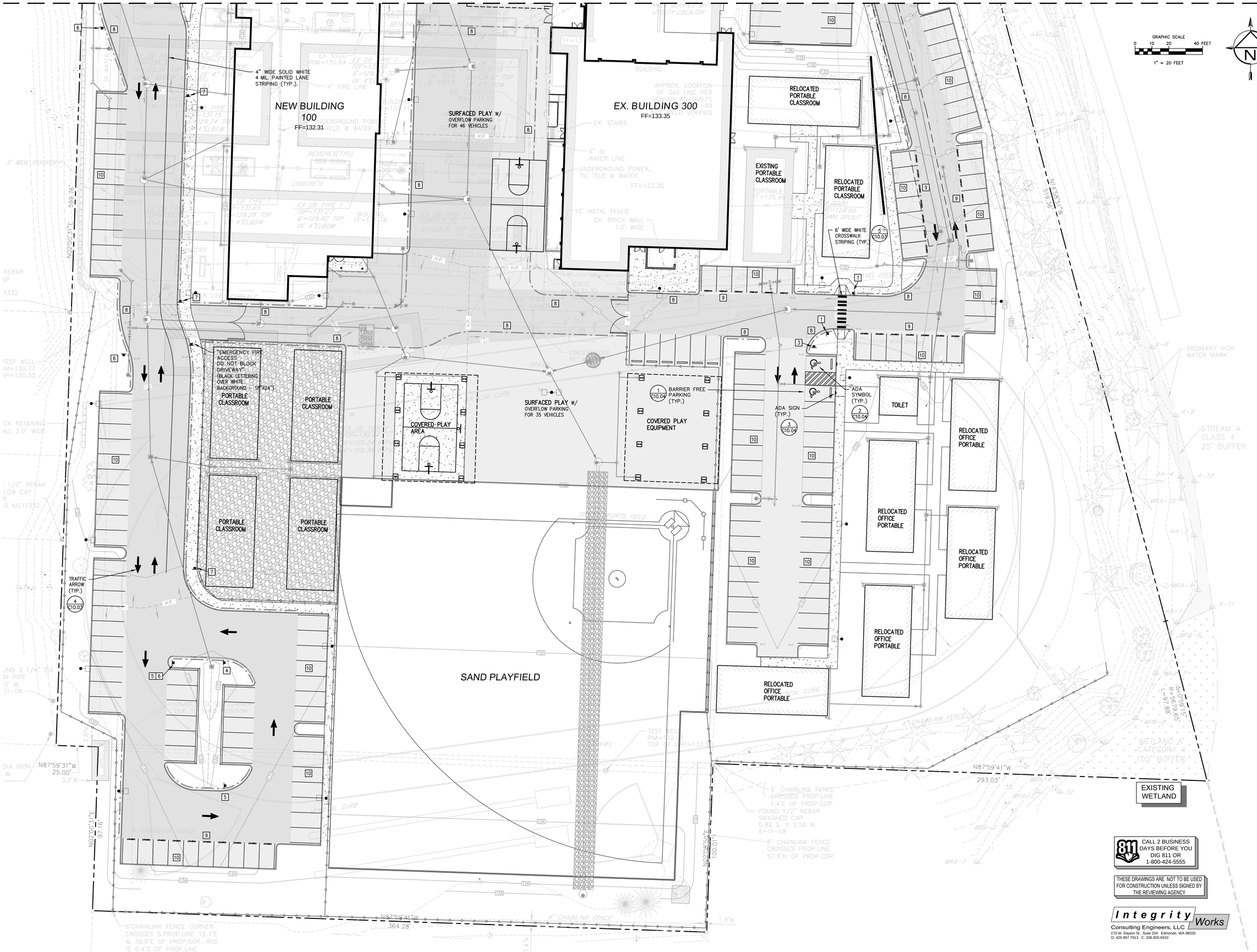

CALL 2 BUSINESS DAYS BEFORE YOU DIG 811 OR 1-800-424-5555

THESE DRAWINGS ARE NOT TO BE USED FOR CONSTRUCTION UNLESS SIGNED BY THE REVIEWING AGENCY

Integrity Works
Consulting Engineers, LLC
170 W. Dayton St. Suite 204 Edmonds WA 98020
O: 425.967.7913 C: 206.920.9410

Cornerstone
ARCHITECTURAL GROUP
6161 NE 175th Street, Suite 101
Kenmore, Washington 98028
Phone: 206.682.5000
cornerstonearch.com

© Cornerstone Architectural Group

JOSEPH B. MOON
STATE OF WASHINGTON
34972
PROFESSIONAL ENGINEER
04/28/16

CLARK ELEMENTARY SCHOOL
ISSAQUAH SCHOOL DISTRICT
400 1st AVE. SE
ISSAQUAH, WASHINGTON 98027

PERMIT SET

SHEET TITLE: HORIZ. CONTROL AND PAVING

DATE: 04-28-16 PROJECT NO: 191406

REVISIONS:

C10.02

1 NOT USED
NOT TO SCALE

2 NOT USED
NOT TO SCALE

3 NOT USED
NOT TO SCALE

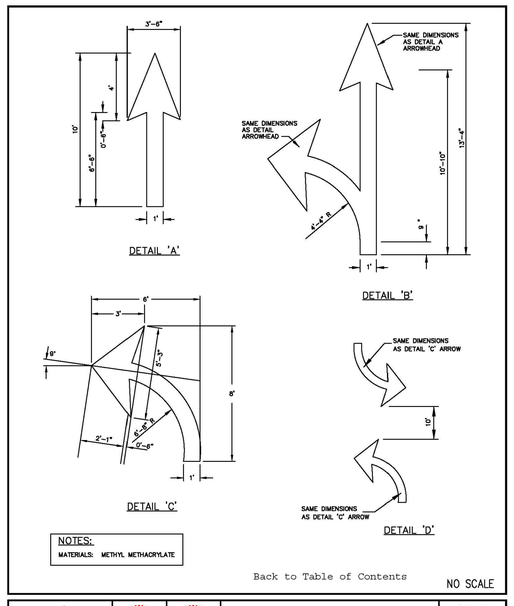

4 TRAFFIC ARROWS
NOT TO SCALE

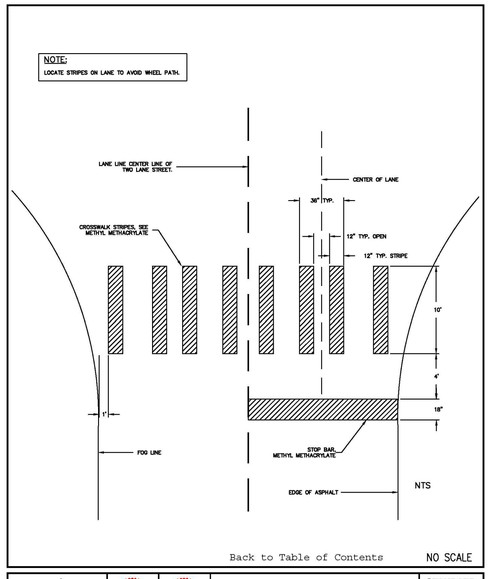

5 TYPICAL CROSSWALK STRIPE
NOT TO SCALE

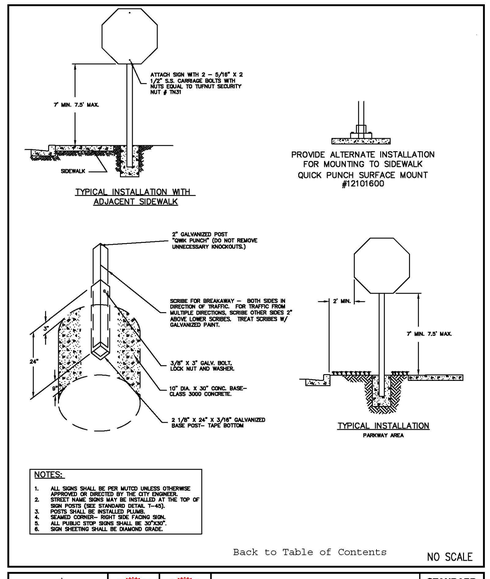

6 TRAFFIC SIGN INSTALLATION
NOT TO SCALE

THESE DRAWINGS ARE NOT TO BE USED FOR CONSTRUCTION UNLESS SIGNED BY THE REVIEWING AGENCY

811 CALL 2 BUSINESS DAYS BEFORE YOU DIG 811 OR 1-800-424-5555

Integrity Works
Consulting Engineers, LLC
170 W. Dayton St. Suite 204 Edmonds WA 98020
O: 425.967.7913 C: 206.920.9410

Cornerstone
ARCHITECTURAL GROUP
6161 NE 175th Street, Suite 101
Kenmore, Washington 98028
Phone: 206.652.5000
cornerstonearch.com

© Cornerstone Architectural Group

JOSEPH B. MOORE
STATE OF WASHINGTON
38972
PROFESSIONAL ENGINEER
04/28/16

CLARK ELEMENTARY SCHOOL
ISSAQUAH SCHOOL DISTRICT
400 1st AVE. SE
ISSAQUAH, WASHINGTON 98027

PERMIT SET
SHEET TITLE: STRIPING AND SIGNAGE DETAILS
DATE: 04-28-16
PROJECT NO: 191406
REVISIONS:

C10.03

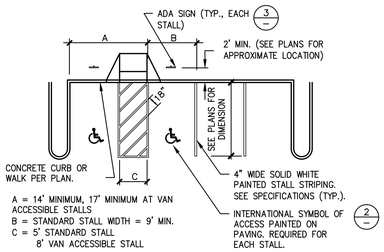

NOTES:
1. SEE SITE PLAN FOR PARKING SPACE LOCATIONS.
2. SLOPES SHALL NOT EXCEED 2.0% IN ANY DIRECTION WITHIN BARRIER FREE PARKING SPACES.
3. IMPROVEMENTS SHALL COMPLY WITH ICC/ANSI A117.1-2003.
4. ALL ACCESSIBLE STALLS SHALL HAVE WHEEL STOPS.

1 BARRIER FREE PARKING AREA AND STRIPING
NOT TO SCALE

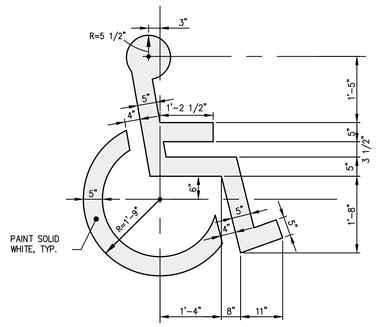

2 INTERNATIONAL ACCESSIBLE (ADA) SYMBOL
NOT TO SCALE

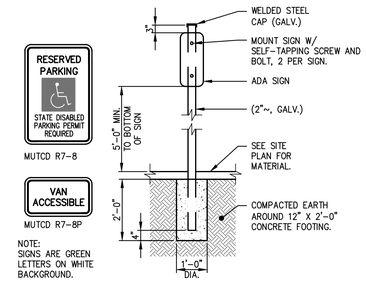

3 ADA SIGN WITH MOUNTING
NOT TO SCALE

4 NOT USED
NOT TO SCALE

5 NOT USED
NOT TO SCALE

6 NOT USED
NOT TO SCALE

THESE DRAWINGS ARE NOT TO BE USED FOR CONSTRUCTION UNLESS SIGNED BY THE REVIEWING AGENCY

811 CALL 2 BUSINESS DAYS BEFORE YOU DIG 811 OR 1-800-424-5555

Integrity Works
Consulting Engineers, LLC
170 W. Dayton St. Suite 204 Edmonds WA 98020
O: 425.967.7913 C: 206.920.9410

Cornerstone
ARCHITECTURAL GROUP
6161 NE 175th Street, Suite 101
Kenmore, Washington 98028
Phone: 206.682.5000
cornerstonearch.com

© Cornerstone Architectural Group

JOSEPH B. MOON
STATE OF WASHINGTON
38972
PROFESSIONAL ENGINEER
04/28/16

CLARK ELEMENTARY SCHOOL
ISSAQUAH SCHOOL DISTRICT
400 1st AVE. SE
ISSAQUAH, WASHINGTON 98027

PERMIT SET

SHEET TITLE: STRIPING AND SIGNAGE DETAILS

DATE: 04-28-16 PROJECT NO: 191406

REVISIONS:

C10.04

SW1/4, NW1/4, SEC. 34, TWP. 24N, RGE 6E., W.M.

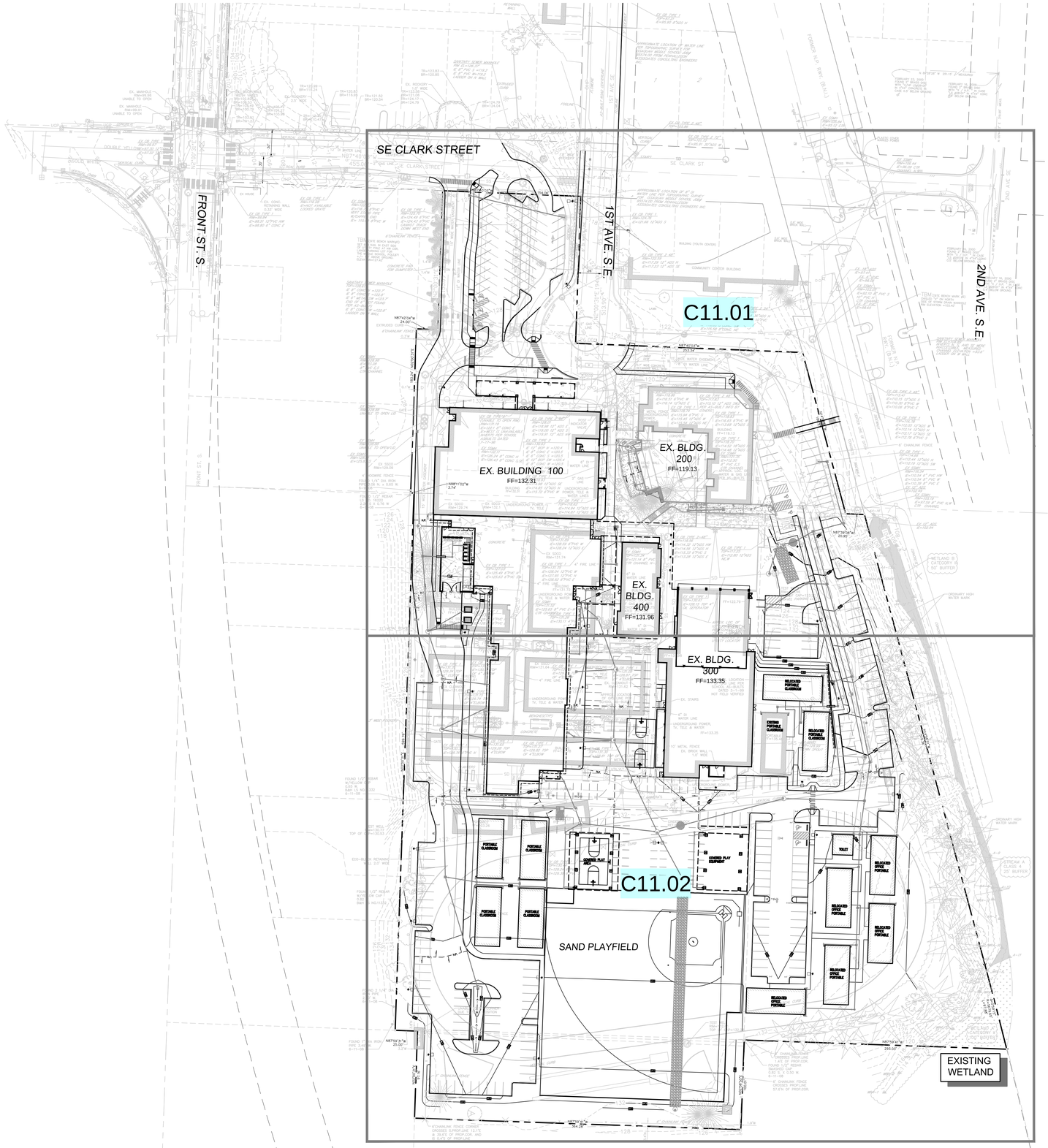

N

GRAPHIC SCALE
0 25 50 100 FEET
1" = 50 FEET

CALL 2 BUSINESS DAYS BEFORE YOU DIG 811 OR 1-800-424-5555

THESE DRAWINGS ARE NOT TO BE USED FOR CONSTRUCTION UNLESS SIGNED BY THE REVIEWING AGENCY

Integrity Works
Consulting Engineers, LLC
170 W. Dayton St. Suite 204 Edmonds WA 98020
O: 425.967.7913 C: 206.920.9410

Cornerstone
ARCHITECTURAL GROUP
6161 NE 175th Street, Suite 101
Kenmore, Washington 98028
Phone: 206.682.5000
cornerstonearch.com

© Cornerstone Architectural Group

JOSEPH B. MOORE
STATE OF WASHINGTON
38972
PROFESSIONAL ENGINEER
04/28/16

CLARK ELEMENTARY SCHOOL
ISSAQUAH SCHOOL DISTRICT
400 1st AVE. SE
ISSAQUAH, WASHINGTON 98027

PERMIT SET

SHEET TITLE: FIRE VEHICLE ACCESS ANALYSIS OVERVIEW PLAN

DATE: 04-28-16 PROJECT NO: 191406

REVISIONS:

C11.00

SW1/4, NW1/4, SEC. 34, TWP. 24N, RGE 6E., W.M.

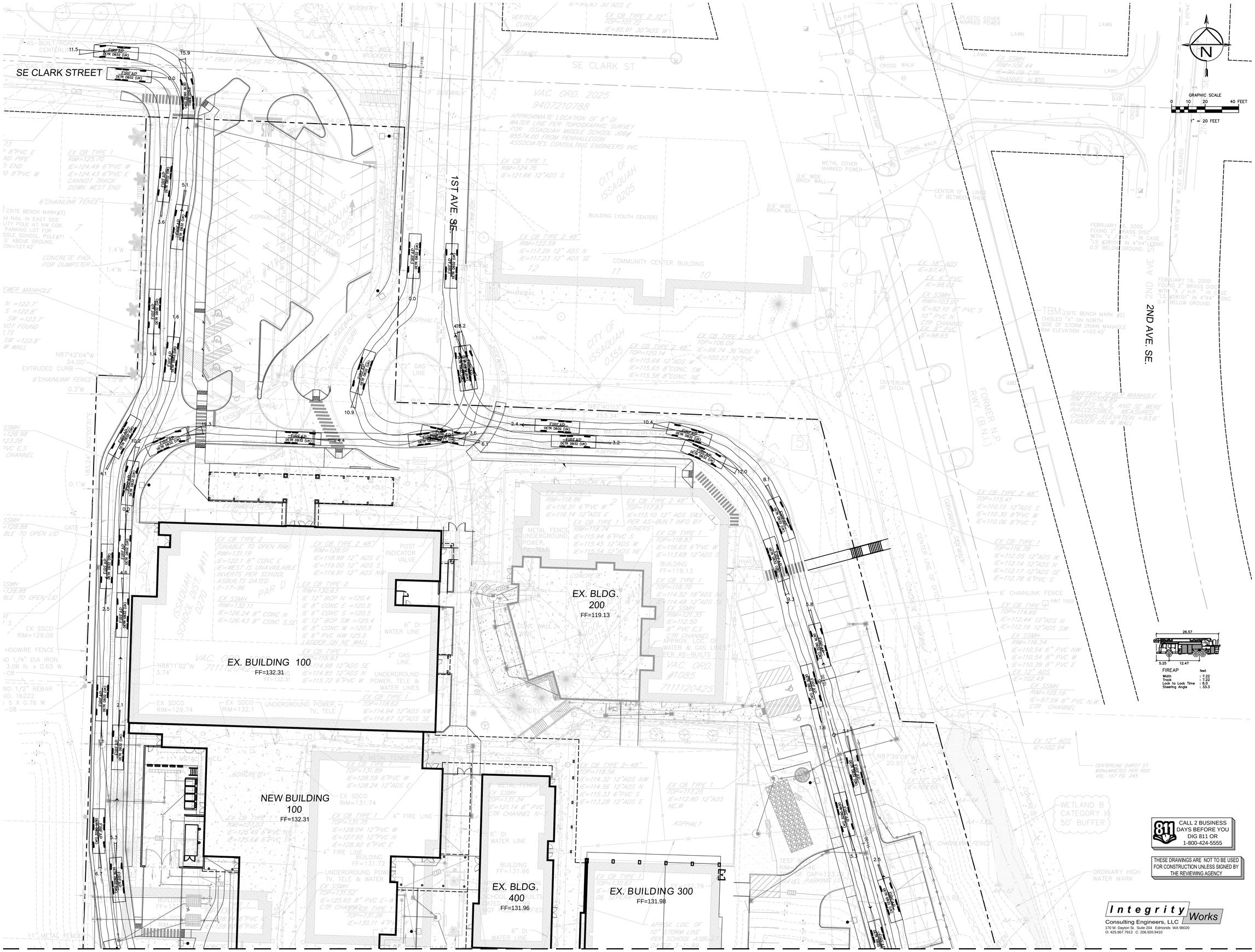

Cornerstone
ARCHITECTURAL GROUP
6161 NE 175th Street, Suite 101
Kenmore, Washington 98028
Phone: 206.682.5000
cornerstonearch.com

© Cornerstone Architectural Group

JOSEPH B. MOON
STATE OF WASHINGTON
38972
PROFESSIONAL ENGINEER
04/28/16

CLARK ELEMENTARY SCHOOL
ISSAQUAH SCHOOL DISTRICT
400 1st AVE. SE
ISSAQUAH, WASHINGTON 98027

PERMIT SET

SHEET TITLE: FIRE VEHICLE ACCESS ANALYSIS

DATE: 04-28-16 PROJECT NO: 191406

REVISIONS:

C11.01

MATCHLINE – SEE SHEET C12.01

SW1/4, NW1/4, SEC. 34, TWP. 24N, RGE 6E., W.M.

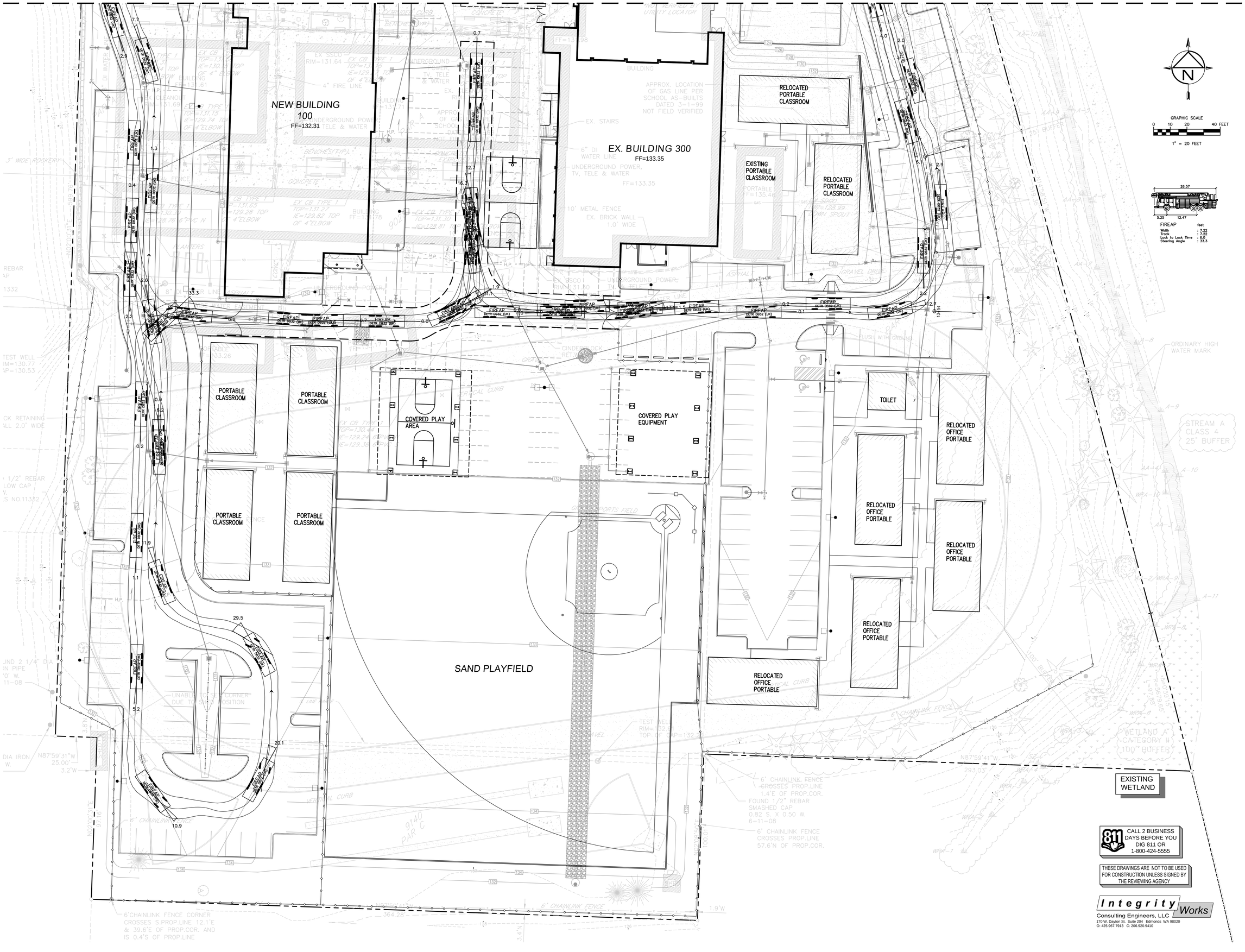

CALL 2 BUSINESS DAYS BEFORE YOU DIG 811 OR 1-800-424-5555

THESE DRAWINGS ARE NOT TO BE USED FOR CONSTRUCTION UNLESS SIGNED BY THE REVIEWING AGENCY

Integrity Works
Consulting Engineers, LLC
170 W. Dayton St. Suite 204 Edmonds WA 98020
O: 425.967.7913 C: 206.920.9410

Cornerstone
ARCHITECTURAL GROUP
6161 NE 175th Street, Suite 101
Kenmore, Washington 98028
Phone: 206.682.5000
cornerstonearch.com

© Cornerstone Architectural Group

JOSEPH B. MOON
STATE OF WASHINGTON
36972
PROFESSIONAL ENGINEER
04/28/16

CLARK ELEMENTARY SCHOOL
ISSAQUAH SCHOOL DISTRICT
400 1st AVE. SE
ISSAQUAH, WASHINGTON 98027

PERMIT SET

SHEET TITLE: FIRE VEHICLE ACCESS ANALYSIS

DATE: 04-28-16 PROJECT NO: 191406

REVISIONS:

C11.02

BARRIER

'-8'HIGH

EQUAL

EARS

PARKING LSC:
-25 SF OF LSC FOR EVERY PARKING SPACE
-1 TREE FOR EVERY 6 PARKING SPACES (10' HIGH AND 2" CAL. MINIMUMS) BEING 100% BROADLEAF CANOPY TREES
-PLANTING ISLANDS AT ENDS AND MIDWAY WITH NO MORE THAN 10 STALLS BETWEEN ISLANDS, WIDTH TO BE A MINIMUM OF 9' WIDE

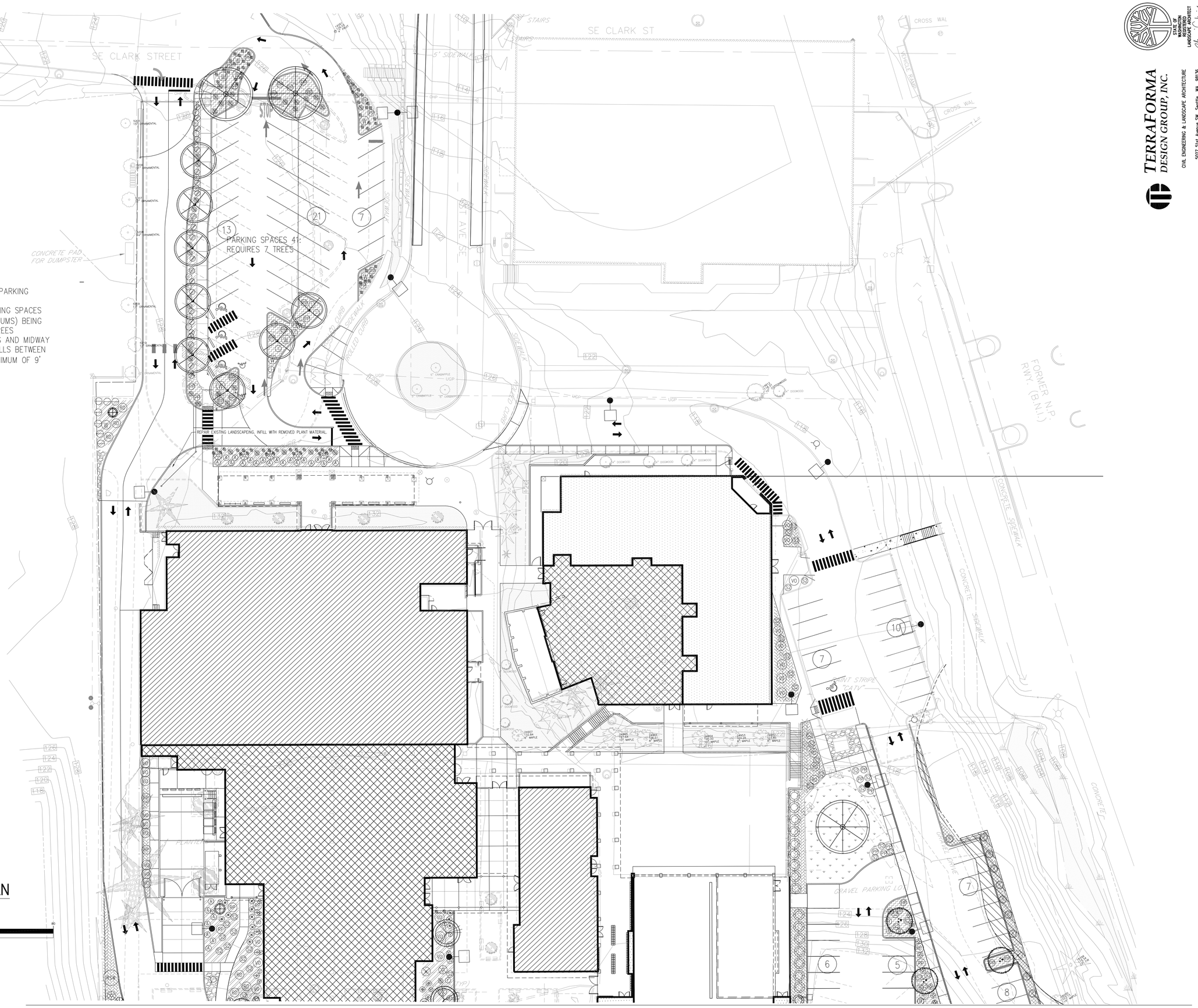

LANDSCAPE PLAN

GRAPHIC SCALE

(IN FEET)
1 inch = 20 ft.

MATCH LINE : L1.2

MATCH LINE : L1.2

TERRAFORMA DESIGN GROUP, INC.
CIVIL ENGINEERING & LANDSCAPE ARCHITECTURE
5027 31st Avenue SW Seattle WA 98136
phone 206.923.0590 email dean@terraformdesigngroup.com

STATE OF WASHINGTON REGISTERED LANDSCAPE ARCHITECT
DEAN RAE SAKADA
CERTIFICATE NO. 2794
EXPIRES 06/16/14

Cornerstone
ARCHITECTURAL GROUP
6161 NE 175th Street, Suite 101
Kenmore, Washington 98028
Phone: 206.682.5000
cornerstonearch.com

© Cornerstone Architectural Group

CLARK ELEMENTARY SCHOOL
ISSAQUAH SCHOOL DISTRICT
400 1st AVE. SE
ISSAQUAH, WASHINGTON 98027

PERMIT SET

SHEET TITLE:
LANDSCAPE PLAN

DATE: 4-06-2016 PROJECT NO: 191406
REVISIONS:

L1.1

MATCH LINE : L1.1

MATCH LINE : L1.1

TYPE 1 LSC REQUIRED:
–REDUCED BUFFER AREA:
ELEVATION DIFFERENCE OF
ABOUT 15', EXISTING
ROCKERY AND NEW
VEGETATION AND OR
FENCE TO SCREEN
PARKED CARS

EXISTING ROCKERY

INSTALL ADDITIONAL
LANDSCAPING ALONG
BUILDING FACADE TO
OFFSET REDUCED BUFFER
ALONG PROPERTY LINE

EXISTING WALL

BERM LANDSCAPE
BEDS

18" OF RIVER ROCK AT
FRONT OF PARKING STALLS

PARKING SPACES 76:
REQUIRES 13 TREES

PORTABLE
CLASSROOM

PORTABLE
CLASSROOM

PORTABLE
CLASSROOM

PORTABLE
CLASSROOM

PROPERTY LINE

EXISTING FENCE

VERTICAL CURB

RELOCATED
PORTABLE
CLASSROOM

EXISTING
PORTABLE
CLASSROOM

RELOCATED
PORTABLE
CLASSROOM

PARKING SPACES
82: REQUIRES 14 TREES

TOILET

RELOCATED
OFFICE
PORTABLE

RELOCATED
OFFICE
PORTABLE

RELOCATED
OFFICE
PORTABLE

RELOCATED
OFFICE
PORTABLE

RELOCATED
OFFICE
PORTABLE

EVERGREEN TREES

LANDSCAPE PLAN

GRAPHIC SCALE

20 0 10 20 40 80

(IN FEET)
1 inch = 20 ft.

STATE OF WASHINGTON
DAVID R. SAKADA
LANDSCAPE ARCHITECT
DAVID R. SAKADA
OLYMPIA, WA 98501
EXPIRES 06/16/14

TERRAFORMA
DESIGN GROUP, INC.
CIVIL ENGINEERING & LANDSCAPE ARCHITECTURE
5027 31st Avenue SW Seattle WA 98136
phone 206.932.0590 email dave@terraformdesigngroup.com

Cornerstone
ARCHITECTURAL GROUP
6161 NE 175th Street, Suite 101
Kenmore, Washington 98028
Phone: 206.682.5000
cornerstonearch.com

© Cornerstone Architectural Group

CLARK ELEMENTARY SCHOOL
ISSAQUAH SCHOOL DISTRICT
400 1st AVE. SE
ISSAQUAH, WASHINGTON 98027

PERMIT SET

SHEET TITLE:
LANDSCAPE PLAN

DATE: 4-06-2016 PROJECT NO: 191406

REVISIONS:

L1.2

LANDSCAPE NOTES

GENERAL:

* UTILITY LOCATION: DETERMINE ALL ABOVE GRADE AND UNDERGROUND UTILITIES BEFORE COMMENCING WORK. ALL WORK TO BE COMPLETED TO AVOID ANY DAMAGE. THIS IS THE RESPONSIBILITY OF THE CONTRACTOR.

1. REFER TO TREE RETENTION PLAN AND COORDINATE WITH OWNER'S REPRESENTATIVE FOR TREES TO BE RETAINED AND PROTECTED. PROTECT AS MUCH NATIVE MATERIAL AS POSSIBLE. REMOVE INVASIVE NON NATIVE MATERIAL IN AREAS TO BE REHABILITATED.

2. PLANTING BEDS TO HAVE SOIL DEPTH OF MINIMUM 36" AND 48" AT AREAS WITH TREES.. EXISTING SOIL TO HAVE SOIL TEST TO DETERMINE SUITABILITY FOR GROWTH AND AMENDMENTS ADDED AS SPECIFIED. SUBGRADES FOR ALL PLANTING BED AREAS SHALL ALLOW FOR 12" MINIMUM OF NEW APPROVED TOPSOIL. ADDITIONAL DEPTH OF TOPSOIL WILL BE REQUIRED FOR RAIN GARDENS. ALL PLANTING BEDS TO HAVE POSITIVE DRAINAGE. MINIMUM 3%.

3. ALL PLANTING BEDS TO BE NON-COMPACTED TO A DEPTH OF 18" PRIOR TO PLANTING.

4. EXISTING CLAY OR SANDY SOILS SHALL BE AUGMENTED WITH ORGANIC SUPPLEMENTS. SOIL ANALYSIS MAY BE REQUIRED.

5. CONTRACTOR SHALL GUARANTEE PLANTS AND GRASS FOR A MINIMUM OF ONE YEAR AFTER APPROVED COMPLETION.

6. IMMEDIATELY NOTIFY TERRAFORMA DESIGN GROUP OF ANY ADVERSE CONDITIONS OR CONFLICTS WHICH MAY AFFECT HEALTH OF PLANT MATERIAL.

PLANTING BEDS:

1. PLANTING BEDS (NOT INCLUDING RAIN GARDENS) TO HAVE A MINIMUM OF 12" OF APPROVED THREE WAY TOPSOIL. 18" AT AREAS WITH TREES. DEPTH OF SOIL IS DETERMINED AFTER SETTLING HAS OCCURRED. BEDS TO BE NONCOMPACTED TO A DEPTH OF 18". PLANTING BEDS TO HAVE MORE SOIL IF NECESSARY TO BE FLUSH WITH CURB, SIDEWALK OR OTHER PAVED SURFACE. ALL PLANTING BEDS TO HAVE POSITIVE DRAINAGE.

2. RAIN GARDENS (SWALE AREAS) CONSTRUCTION AND SOIL DEPTH ARE TO BE PER CIVIL ENGINEER REQUIREMENTS.

3. CONTRACTOR TO VERIFY PLANT QUANTITIES AND SQUARE FOOTAGE. NOTIFY TERRAFORMA DESIGN GROUP IF THERE IS A DISCREPANCY.

4. ALL PLANT MATERIAL TO BE WELL BRANCHED, FREE FROM DISEASE OR PEST, AND HAVE A WELL DEVELOPED ROOT SYSTEM. ALL MATERIAL TO MEET AMERICAN ASSOCIATION OF NURSERYMEN STANDARDS.

5. FERTILIZE ALL PLANT MATERIAL WITH SLOW RELEASE FERTILIZER PER MANUFACTURER'S RATES. DO NOT FERTILIZE RAIN GARDEN AREA WITHIN HIGH WATER LINE LIMITS.

6. PLANT MATERIAL PLANTED TO BE SAME AS OR NO MORE THAN 1" HIGHER THAN CURRENT GROWTH RATE AT FINISH GRADE. ALWAYS INSTALL MATERIAL UPRIGHT, EVEN ON SLOPES. CREATE A LEVEL SPOT AND PROVIDE A WATER DAM.

7. WATER PLANTS THOROUGHLY DURING PLANTING AND IMMEDIATELY FOLLOWING. WATER HEAVILY AT FIRST , 3 TIMES PER WEEK, AND LESS ONCE ESTABLISHED.

8. ORGANIC MEDIUM MULCH TO BE A MINIMUM OF 3" DEPTH IN ALL PLANTING BEDS. GROUNDCOVERS TO RECEIVE 2" OF STABILIZED COMPOST MULCH. RAIN GARDENS TO RECEIVE STABILIZED COMPOST MULCH.

9. STAKES TO BE COMPLETELY REMOVED BY CONTRACTOR PRIOR TO 1 YEAR. CHECK QUARTERLY FOR DAMAGE OR ADJUSTMENTS NEEDED.

10. CONTRACTOR IS TO VERIFY THAT ALL SOIL IS WEED FREE. IF EXCESSIVE WEEDS OCCUR WITHIN ONE YEAR, THE CONTRACTOR IS RESPONSIBLE TO REMOVE WEEDS AT NO COST TO OWNER. CHEMICALS ARE NOT TO BE USED.

11. REFER TO WRITTEN SPECIFICATIONS AND CITY FOR ADDITIONAL REQUIREMENTS AND INFORMATION.

GRASS/HYDROSEED:

1. FOR GRASS AREAS: WATERING, FERTILIZING, AND MOWING, FOLLOW MANUFACTURER'S INSTRUCTIONS AND SPECIFICATIONS.L

2. INSTALL WITH MULCH AND TACKIFIER.

3. 6 " MINIMUM TOPSOIL ROTOTILLED TO DEPTH OF 6" WITH AMMENDMENTS. RAKE AND ROLL. ALTERNATIVE TO ADD COMPOST AND AMMENDMENTS TO EXISTING SOIL TO ACHIEVE VIABLE AREA FOR GRASS.

4. PROTECT ADJACENT AREAS DURING ESTABLISHMENT.

5. ALL LAWN TO BE EDGED CLEANLY AND GRASS TO BE ONLY IN DESIGNATED AREAS.

IRRIGATION:

1. AN IRRIGATION WILL BE PROVIDED ON SHEETS L2.

2. IRRIGATION IS TO CONFORM WITH ALL CODES. CONTRACTOR IS RESPONSIBLE FOR ALL REQUIREMENTS AND TESTING.

3. FOLLOW WRITTEN SPECIFICATIONS FOR WIRE SIZE, HEAD TYPE, CONTROLLER, RAIN SENSOR, ECT.

A SEPARATE IRRIGATION METER IS TO BE PROVIDED. CONTROLLER TO BE IN AREA DESIGNATED BY ARCHITECT. ANOTHER SEPARATE CONTROLLER IS TO BE INSTALLED FOR THE VEGETABLE GARDEN AREA.

OTHER:

1. COMPOSTED ORGANIC MATERIAL OR WOOD ARBOR CHIPS ARE TO BE USED FOR RAIN GARDENS AREAS.

2. IF UNSUITABLE OR QUESTIIONALBE SOIL OR SUBBASE MATERIAL IS FOUND, CONTACT THE OWNER'S REPRESENTATIVE FOR DIRECTION.

3. RAIN GARDEN SOIL AND DRAINAGE IS SPECIFIED BY OTHERS. REFER TO CIVIL DRAWINGS AND ARCHITECT.

4. EXISTING TREES TO REMAIN AND REMOVED ON SHEETS L3. REFER TO SHEETS FOR REQUIREMENTS AND TREE PROTECTION PROCEDURES.

SITE CONSTRUCTION:

1. IT IS THE RESPONSIBILITY OF THE CONTRACTOR TO VERIFY AND LOCATE ANY EXISTING OR PROPOSED UTILITIES. ANY DAMAGE DONE BY NOT LOCATING, IS THE RESPONSIBILITY OF THE CONTRACTOR. ANY UTILITIES SHOWN ON THE LANDSCAPE PLANS ARE DIAGRAMATIC ONLY.

2. REFER TO CIVIL ENGINEERING DRAWINGS FOR GRADING, DRAINAGE, AND UTILITY DESIGN. UTILITIES SHOWN ON DRAWING ARE SCHEMATIC ONLY.

3. EROSION CONTROL SHALL BE PROVIDED DURING CONSTRUCTION PER CIVIL PLANS.

THE LOCATION OF ALL EXISTING UNDERGROUND UTILITIES IS SHOWN IN AN APPROXIMATE WAY ONLY. THE CONTRACTOR SHALL DETERMINE THE EXACT LOCATION OF ALL EXISTING UTILITIES BEFORE COMMENCING WORK. CONTRACTOR AGREES TO BE FULLY RESPONSIBLE FOR ANY AND ALL DAMAGES WHICH MIGHT BE OCCASIONED BY HIS FAILURE TO EXACTLY LOCATE AND PRESERVE ANY AND ALL UNDERGROUND UTILITIES.

CALL 48 HOURS BEFORE YOU DIG 1-800-424-5555

THE CONTRACTOR IS RESPONSIBLE TO DETERMINE ALL EXISTING AND ALL NEW OR PROPOSED UTILITIES PRIOR TO COMMENCING WORK. COORDINATE WITH OTHER TRADES AS NECESSARY. ANY CONSEQUENCES FROM NOT DETERMINING ALL UTILITIES WILL BE THE RESPOSIBILITY OF THE CONTRACTOR.

PLANT SCHEDULE

TREES

SYMBOL	SCIENTIFIC NAME / COMMON NAME	QUANTITY	SIZE (MIN.)	SPACING (MAX.)	NOTES
	EXISTING TREES WITHIN CONSTRUCTION AREA				REFER TO TREE RETENTION PLAN COORDINATE WITH OWNER REPRESENTATIVE
	ACER CIRCINATUM / VINE MAPLE	8	1 3/4" CAL. (MIN.)	AS SHOWN	MATCHING FORM, MULTI STEM ACCEPTABLE
	AMELANCHIER 'PRINCESS DIANA' / PRINCESS DIANA SERVICEBERRY	8	2" CAL. (MIN.)	AS SHOWN	SINGLE TRUNK, MIN. BRANCH HEIGHT 5'
	CARPINUS 'NATIVE FLAME' / NATIVE FLAME AMERICAN HORNBEAM	6	1 3/4" CAL. (MIN.)	AS SHOWN	SINGLE TRUNK, MIN. BRANCH HEIGHT 5'
	CRATAEGUS CRUS GALLI INERMIS / THORNLESS COCKSPUR HAWTHORN	9	1 3/4" CAL. (MIN.)	AS SHOWN	SINGLE TRUNK, MIN. BRANCH HEIGHT 5'
	CORNUS 'EDDIES WONDER WHITE' / EDDIES WONDER WHITE DOGWOOD	9	1 3/4" CAL. (MIN.)	AS SHOWN	SINGLE TRUNK, MIN. BRANCH HEIGHT 5'
	GINGKO BILOBA 'AUTUMN GOLD' / AUTUMN GOLD GINGKO	6	1 3/4"-2" CAL.	AS SHOWN	SINGLE TRUNK, MIN. BRANCH HEIGHT 5'
	PRUNUS SARGENTII / PINK FLAIR CHERRY	22	1 3/4" CAL.	AS SHOWN	SINGLE TRUNK, MIN. BRANCH HEIGHT 5'
	CHAMAECYPARIS OBTUSA GRACILIS / SLENDER HINOKI CYPRESS	5	5' - 6', B&B	AS SHOWN	SINGLE TRUNK, STRONGLY UPRIGHT
	CUPRESSESUS LEYLANDII / LEYLAND CYPRESS	24	8', B&B	AS SHOWN	FULL & BUSHY, STRONGLY UPRIGHT

NOTE:
- DECIDUOUS TREES MEASURED AT DBH.
- ALL DECIDUOUS TREES TO HAVE LOWEST BRANCHES AT 5' AND ABOVE. PRUNING IS NOT ALLOWED TO MEET THIS REQUIREMENT. TREES MAY BE REJECTED IF NOT IN UNIFORM AND BALANCED PROPORTIONS. TREES TO BE A MINIMUM OF 10' TALL.
- ALL EVERGREEN TREES MEASURED FROM THE TOP OF GROUND TO UPPER BRANCHES.
- ALL TREES TO MEET AMERICAN ASSOCIATION OF NURSERYMEN STANDARDS.
- ALL TREES TO HAVE SINGLE TRUNK AND MATCHING FORM, UNLESS OTHERWISE NOTED.

SHRUBS

SYMBOL	SCIENTIFIC NAME / COMMON NAME	QUANTITY	SIZE (MIN.)	SPACING (MAX.)	NOTES
A	AZALEA: HINO CRIMSON, HELEN CLOSE , AMARANTHA / AZALEA HELEN CLOSE & HINO CRIMSON	72	3 GALLON	AS SHOWN	FULL. MATCHING CONFIRM SPECIES PRIOR TO ORDERING
B	BERBERIS THUN. 'CRIMSON PYGMY' / DWARF RED JAPANESE BARBERRY	27	2 GALLON	AS SHOWN	FULL, WELL SHAPED
	ABELIA 'KALEIDOSCOPE' / VARIEGATED ABELIA	28	5 GALLON	AS SHOWN	FULL, WELL SHAPED
	CORNUS ALBAL 'ELEGATISSIMA' / VARIEGATED RED TWIG DOGWOOD	46	2 GALLON	AS SHOWN	FULL, HEALTHY FOLIAGE, MULTI-STEM
	HYDRANGEA MACROPHYLLA 'SHAMROCK' / SHAMROCK HYDRANGEA	60	2 GALLON	AS SHOWN	FULL, BUSHY, WELL SHAPED
	HYDRANGEA QUERCIFOLIA 'SNOWFLAKE' / SNOWFLAKE OAK LEAF HYDRANGEA	37	5 GALLON	AS SHOWN	FULL, BUSHY
	MAHONIA AUQUIFOLIUM / OREGON GRAPE	180	2 GALLON	AS SHOWN	FULL, NICE SHAPE, STRONGLY UPRIGHT MULTI- STEM
	MAHONIA EURYBRACTEATA / SOFT CARESS OREGON GRAPE	22	2 GALLON	AS SHOWN	FULL, NICE SHAPE, UNIFORM
	NANDINA 'FIREPOWER' / FIREPOWER NANDINA	55	2 GALLON	AS SHOWN	FULL. MATCHING
	PIERIS VARIEGATA / VARIEGATED LILY OF THE VALLEY	38	5 GALLON	AS SHOWN	NICE FOLIAGE, GOOD BRANCHING PATTERN
	PIERIS JAPONICA 'CAVATINE' / DWARF LILY OF THE VALLEY SHRUB	21	5 GALLON	AS SHOWN	FULL, WELL SHAPED
PP	PINUS MUGHO PUMILIO / DWARF PUMILIO MUGHO PINE	76	2 GALLON	AS SHOWN	NICE FOLIAGE, MULTI STEMS
	POTENTILLA 'PRIMROSE BEAUTY' / PRIMROSE CINQUIFOIL	86	2 GALLON	AS SHOWN	NICE FOLIAGE, MULTI STEMS
RSW	RIBES SANGUINEUM / RED FLOWERING CURRANT	28	3 GALLON	AS SHOWN	FULL, BUSHY, WELL SHAPED
r	RHODODENDRON IMPEDITUM / IMPEDITUM RHODODENDRON	33	5 GALLON/B&B	AS SHOWN	FULL, BUSHY, WELL SHAPED
RD	RHODODENDRON 'DORA AMATEIS' & "CHRISTMAS CHEER' / DORA AMATEIS & CHRIST. CHEER RHODODENDRON	60	5 GALLON/B&B 24 TALL MINIMUM	AS SHOWN	FULL, BUSHY, WELL SHAPED
RP	RHODODENDRON 'PJM' / PJM RHODODENDRON (PURPLE)	27	5 GALLON/B&B	AS SHOWN	FULL, WELL SHAPED, UPRIGHT
R	ROSA NUTKANA / NOOTKA ROSE	33	1 GALLON	AS SHOWN	FULL, WELL SHAPED, UPRIGHT
	SALIX PURPUREA 'NANA' / DWARF BLUE ARCTIC WILLOW	5	2 GALLON	AS SHOWN	FULL, NICE SHAPE, UNIFORM
S3	SPIREA / BRIDAL WREATH SPIREA	21	2 GALLON	AS SHOWN	NICE FOLIAGE
SB	SPIREA B. 'GOLDFLAME' / GOLDFLAME SPIREA	9	2 GALLON	AS SHOWN	FULL. MATCHING
S2	SPIREA J. 'LITTLE PRINCESS' / LITTLE PRINCESS SPIREA	82	2 GALLON	AS SHOWN	FULL, WELL SHAPED, UPRIGHT
VO	VACCINIUM OVATUM / EVERGREEN HUCKLEBERRY	55	2 GALLON	AS SHOWN	FULL. MATCHING
VI	VIBURNUM SHOSHONI / SHOSHONI VIBURNUM	21	3 GALLON	AS SHOWN	FULL, WELL SHAPED, UPRIGHT
W	WEIGELIA 'RUBIDOR' / YELLOW LEAFED WEIGELIA	19	3 GALLON	AS SHOWN	FULL, WELL SHAPED, UPRIGHT
	NATIVE INFILL: 9,000 SF APPROX. GAULTHERIA SHALLON, MAHONIA, POLYSTICHUM MUNITUM, SNOWBERRY, OCEAN SPRAY, CURRANT, EVERGREEN HUCKLEBERRY.....	450 50	1 GALLON 2-5 GALLON	APPROX. 3'-5' O.C. (9,500 SF APPROX.)	APPROX. QTY, REFER TO SPECIFICATIONS FOR ADDITIONAL INFORMATION

NOTE:
- INCREASE CONTAINER SIZE IF SIZE IS NOT AVAILABLE.
- ALL SHRUBS/PLANTS TO BE WELL ROOTED(BUT NOT ROOTBOUND), HAVE HEALTHY FULL FOLIAGE, AND OF A MIN. SIZE AND OF AAN STANDARDS

GRASSES/PERENNIALS

SYMBOL	SCIENTIFIC NAME / COMMON NAME	QUANTITY	SIZE (MIN.)	SPACING (MAX.)	NOTES
	FESTUCA GLAUCA 'BOULDER BLUE' / BLUE BOULDER FESCUE	70	1 GALLON	AS SHOWN	FULL, WELL SHAPED
	FUSCIA MAGELLANICA 'AUREA' / HARDY GOLDEN FUSCIA	18	1 GALLON	AS SHOWN	FULL, WELL SHAPED
	MISCANTHUS SIN. 'MORNING LIGHT' / VARIEGATED DWARF MAIDEN GRASS	54	1 GALLON	AS SHOWN	FULL, WELL SHAPED

GROUNDCOVER

SYMBOL	SCIENTIFIC NAME / COMMON NAME	QUANTITY	SIZE (MIN.)	SPACING (MAX.)	NOTES
	CALLUNA VULGARIS / HEATHER	110	1 GALLON	AS SHOWN	SAME VARIETY IN GROUPS
	GRASS: / PERENNIAL RYE	2,200 SF	-	-	NO NET SOD MAINTAIN UNTIL ESTABLISHED INSTALL PER MFG. SPECIFICATIONS
	FRAGARIA VESCA / ALPINE STRAWBERRY	-	4" POTS	18" TRIANGULAR	BUSHY, HEALTHY FOLIAGE
	GAULTHERIA SHALLON / SALLAL	-	1 GALLON	24" TRIANGULAR	FULL, WELL BRANCHED
	MAHONIA REPENS / DWARF OREGON GRAPE	-	1 GALLON	24" TRIANGULAR	FULL, WELL BRANCHED
	POLYSTICHUM MUNITUM / SWORD FERN	-	1 GALLON	24" TRIANGULAR	FULL, WELL BRANCHED
	TEUCRIUM CHAMAEDRYS / GERMANDER	-	1 GALLON	18" TRIANGULAR	FULL, NICE FOLIAGE
	VINCA MINOR ALBA (PURPLE AT ENTRY PARKING LOT) / WHITE DWARF PERIWINKLE	-	1 GALLON	24" TRIANGULAR	FULL, NICE FOLIAGE
	JUNCUS TENUIS/SCIRPUS MICROCARPUS / SLENDER RUSH//SMALL FRUITED BULRUSH	-	1 GALLON	24"-18" TRIANGULAR	FULL, WELL BRANCHED, PLUGS MAY BE AN OPTION

NOTE FOR PLANTING LEGEND:
- ALL PLANTS TO MEET AMERICAN ASSOCIATION OF THE NURSERY STANDARDS.
- ALL PLANTS TO BE OF SAME MATCHING QUALITY, UNIFORM IN APPEARANCE.
- THE SQUARE FOOTAGE AND QUANTITY SHOWN ARE APPROXIMATE ONLY. -CONTRACTOR IS RESPONSIBLE TO VERY SQUARE FOOTAGE AND QUANTITY AND INSTALL AS SHOWN ON PLAN.
-GROUNDCOVER IS NOT REQUIRED AT WATER WELL OF TREES OR UNDERNEATH SHRUBS.

OTHER/MISC.

SYMBOL	COMMON NAME
	RIVER ROCK
	BOULDERS (VARIETY OF SHAPES AND SIZES)

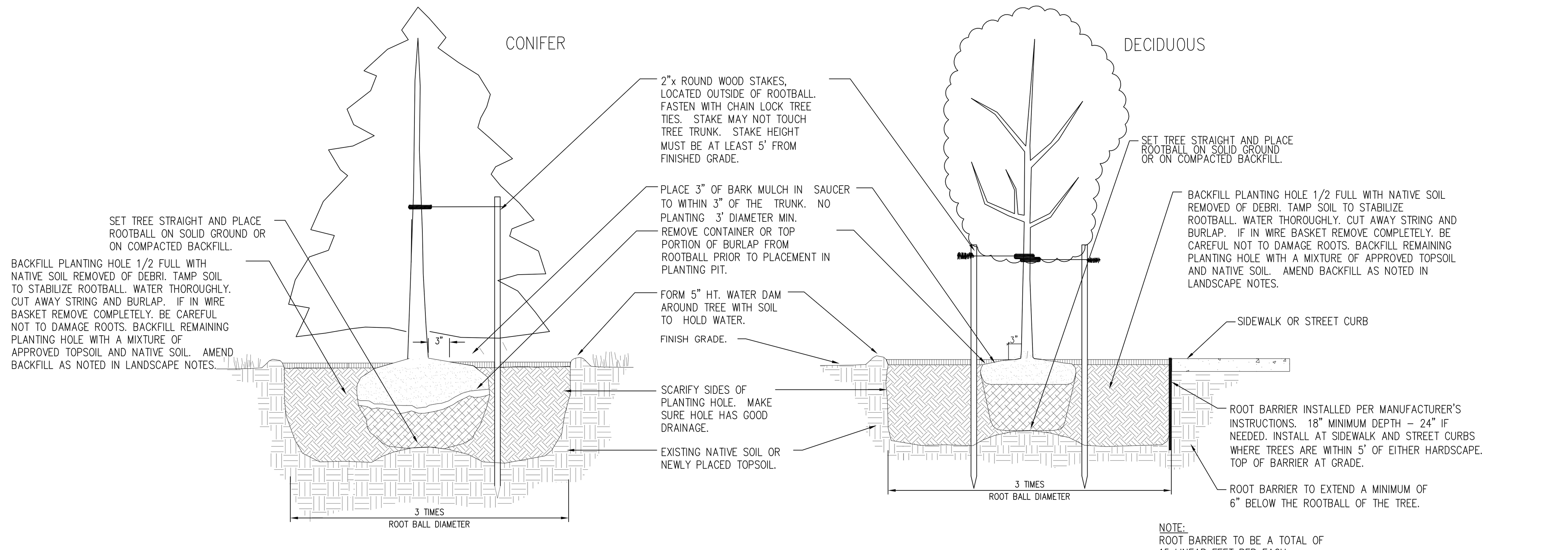

1 / L1.3 **TREE PLANTING DETAIL**
SCALE: N.T.S.

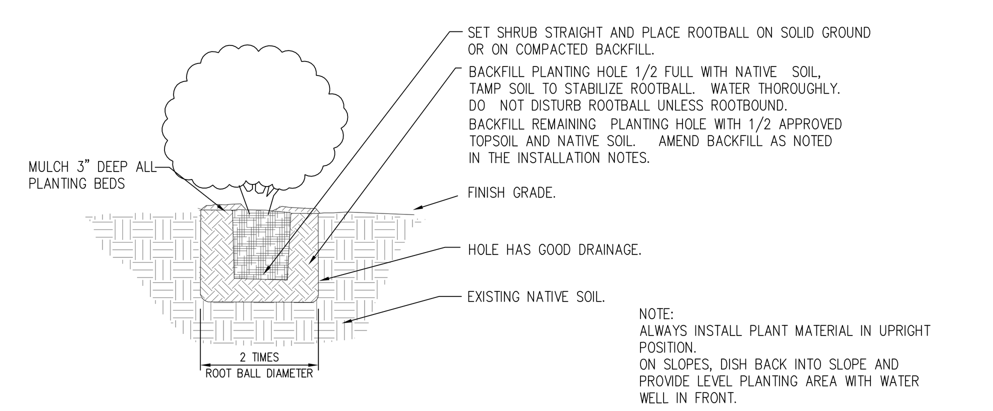

NOTE:
ALWAYS INSTALL PLANT MATERIAL IN UPRIGHT POSITION.
ON SLOPES, DISH BACK INTO SLOPE AND PROVIDE LEVEL PLANTING AREA WITH WATER WELL IN FRONT.

2 / L1.3 **CONTAINER SHRUB PLANTING DETAIL**
SCALE: N.T.S.

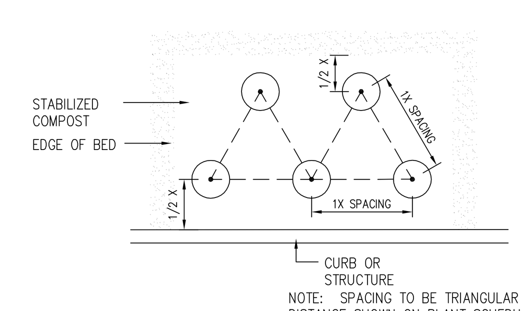

NOTE: SPACING TO BE TRIANGULAR PER DISTANCE SHOWN ON PLANT SCHEDULE

3 / L1.3 **GROUNDCOVER SPACING**
SCALE: N.T.S.

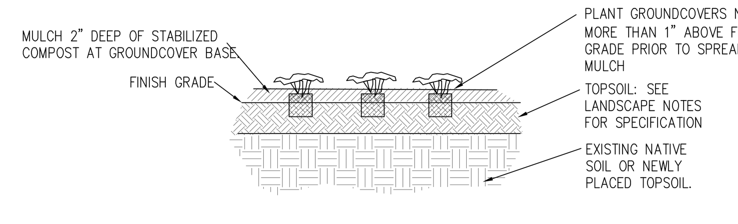

4 / L1.6 **GROUNDCOVER PLANTING DETAIL**
SCALE: N.T.S.

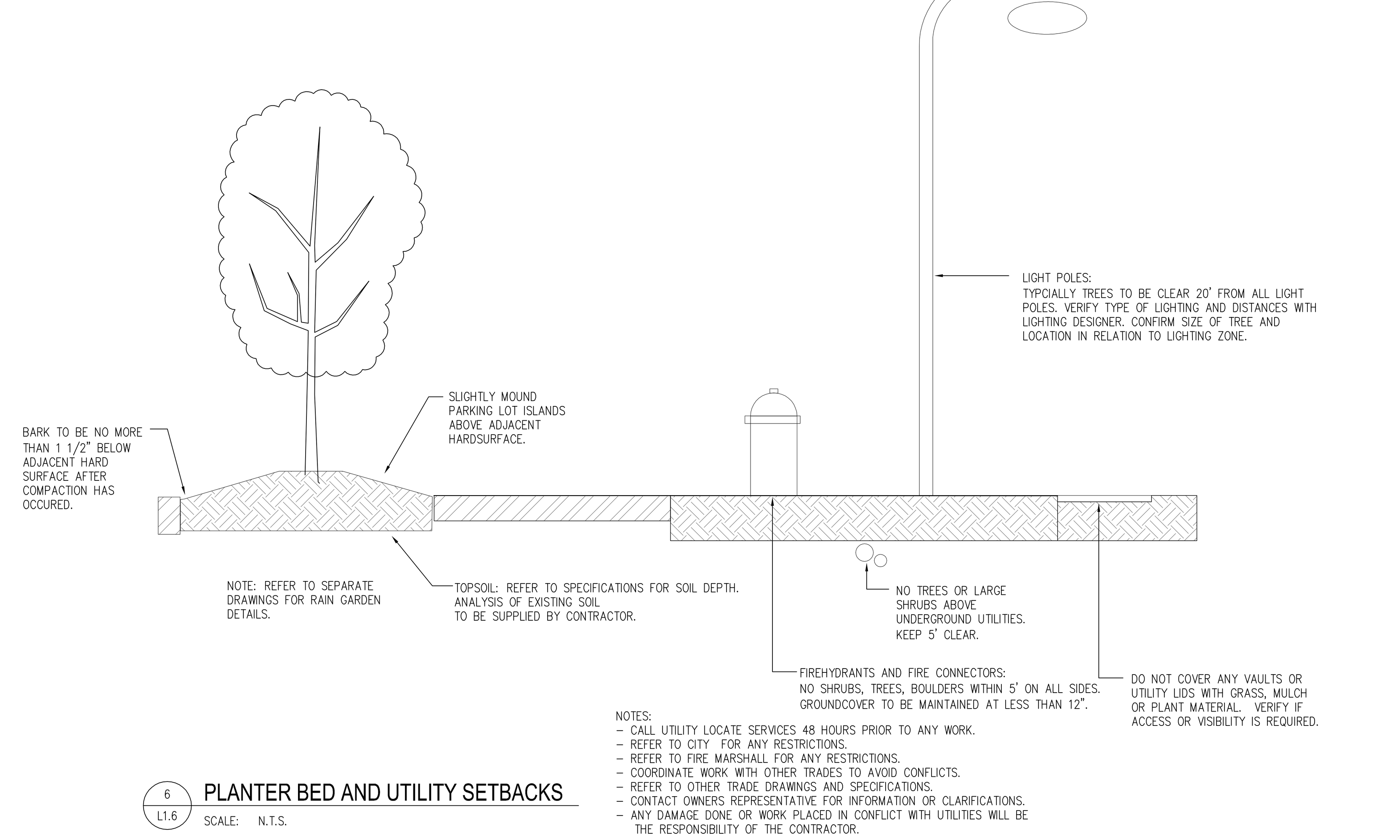

NOTES:
- CALL UTILITY LOCATE SERVICES 48 HOURS PRIOR TO ANY WORK.
- REFER TO CITY FOR ANY RESTRICTIONS.
- REFER TO FIRE MARSHALL FOR ANY RESTRICTIONS.
- COORDINATE WORK WITH OTHER TRADES TO AVOID CONFLICTS.
- REFER TO OTHER TRADE DRAWINGS AND SPECIFICATIONS.
- CONTACT OWNERS REPRESENTATIVE FOR INFORMATION OR CLARIFICATIONS.
- ANY DAMAGE DONE OR WORK PLACED IN CONFLICT WITH UTILITIES WILL BE THE RESPONSIBILITY OF THE CONTRACTOR.

6 / L1.6 **PLANTER BED AND UTILITY SETBACKS**
SCALE: N.T.S.

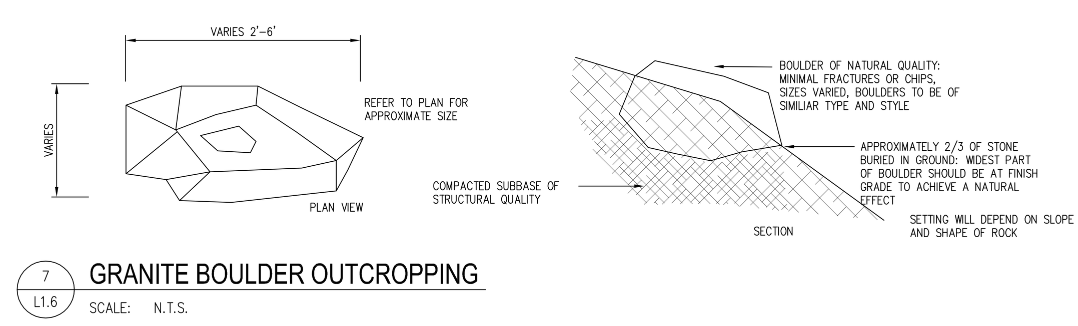

7 / L1.6 **GRANITE BOULDER OUTCROPPING**
SCALE: N.T.S.

TERRAFORMA DESIGN GROUP, INC.
CIVIL ENGINEERING & LANDSCAPE ARCHITECTURE
5027 51st Avenue SW Seattle WA 98136
phone 206.923.0590 email akemi@terraformadesigngroup.com
STATE OF WASHINGTON REGISTERED LANDSCAPE ARCHITECT
AKEMI RAE SAKAIDA
CERTIFICATE NO. 794
EXPIRES 06/16/14
Cornerstone ARCHITECTURAL GROUP
6161 NE 175th Street, Suite 101
Kenmore, Washington 98028
Phone: 206.682.5000
cornerstonearch.com

© Cornerstone Architectural Group

CLARK ELEMENTARY SCHOOL
ISSAQUAH SCHOOL DISTRICT
400 1st AVE. SE
ISSAQUAH, WASHINGTON 98027

PERMIT SET
SHEET TITLE:
LANDSCAPE LEGEND DETAILS & NOTES
DATE: 4-06-2016 PROJECT NO: 191406
REVISIONS:

L1.3

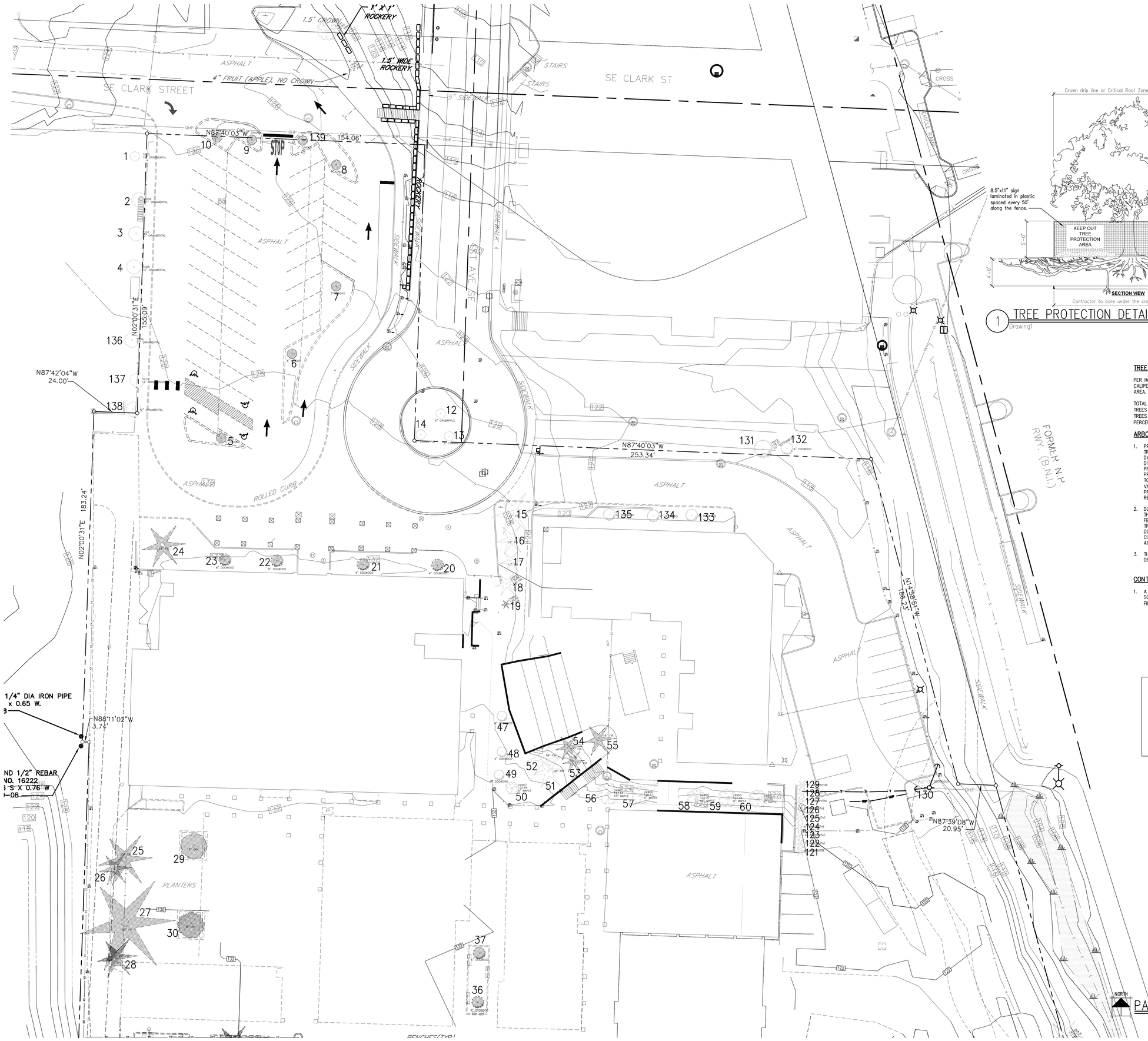

PARTIAL TREE RETENTION PLAN

SCALE: 1"= 20'-0"

Notes:

1. No pruning shall be performed except by approved arborist.
2. No equipment shall operate inside the protective fencing including during fence installation and removal.
3. Critical Root Zone shall be determined by one of the method described below:
   A. The dbh of the tree. Each inch dbh equals to 1 foot root zone radius. Two thirds of this area is considered Critical Root Zone.
   B. On-site CRZ establishment based on actual investigation with an airspade discovering locations of the roots. Airspade exploration must be supervised by an arborist.
4. If roots are damaged during excavation, they must be recut with a sharp, disinfected saw blade, protected with a moist plastic or burlap and covered with soil as soon as possible.

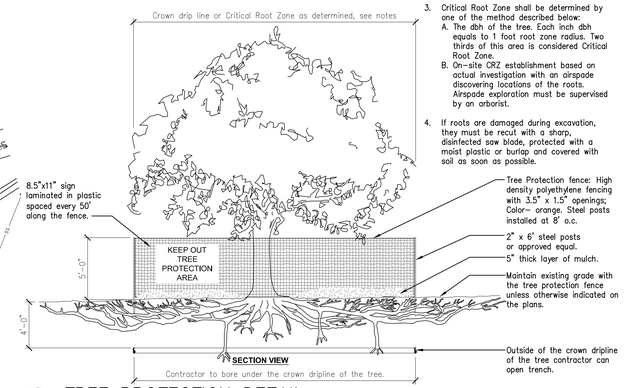

1 TREE PROTECTION DETAIL

Drawing1

SCALE: 1/4"= 1'-0"

TREE RETENTION:

PER IMC 18.12.1385A: RETENTION REQUIRED: 25% OF THE TOTAL CALIPER (DBH) OF ALL SIGNIFICANT TREES IN DEVELOPABLE SITE AREA.

TOTAL TREE DBH:	1577"
TREES TO BE REMOVED:	391"
TREES TO REMAIN:	1186"
PERCENTAGE OF RETENTION:	1186"/1577" = 75.2%

ARBORIST NOTES

1. PROJECT ARBORIST SHALL OBSERVE THE STATUS OF THE TREES DURING REGULAR INSPECTION SITE VISITS. TREE DAMAGE AT THE PROJECT SITE, INCLUDING OVERSTRESSED, DYING OR DEAD TREES, SHALL BE REPORTED TO THE PROJECT MANAGER AS SOON AS IT IS OBSERVED. THE PROJECT MANAGER WILL COORDINATE WITH THE ARBORIST TO DETERMINE THE CAUSE OF THE DAMAGE, ASSESS THE VALUE OF LOSS BASED ON THE TREE'S COST SHOWN IN THE PROJECT DOCUMENTS, AND DIRECT ANY REMEDIAL ACTION REQUIRED TO RESTORE THE TREE.
2. DURING THE PRE-CONSTRUCTION PHASE OF DEVELOPMENT THE PROJECT ARBORIST SHALL INSPECT TREE PROTECTION FENCING AND THE COMPLETION OF PRE-CONSTRUCTION TREATMENTS. THIS INSPECTION SHALL BE CLEARLY DOCUMENTED BY THE APPLICANT AND PROVIDED TO THE CITY PRIOR TO COMMENCEMENT OF ANY CONSTRUCTION ACTIVITY.
3. THE PROJECT ARBORIST SHALL ROUTINELY INSPECT THE DEVELOPMENT SITE THROUGH THE TERM OF THE PROJECT.

CONTRACTOR NOTES

1. A TREE DESIGNATED FOR RETENTION SHALL NOT HAVE THE SOIL GRADE ALTERED WITHIN ITS DRIPLINE OR WITHIN FIFTEEN (15) FEET OF ITS TRUNK WHICHEVER IS GREATER.

LEGEND

TREE SYMBOL	NOTE
	CONIFER TREE TO REMAIN
	DECIDUOUS TREE TO REMAIN
	CONIFER TREE TO BE REMOVED
	DECIDUOUS TREE TO BE REMOVED

Cornerstone
ARCHITECTURAL GROUP
6161 NE 175th Street, Suite 101
Kenmore, Washington 98028
Phone: 206.692.5000
cornerstonearch.com

© Cornerstone Architectural Group

CLARK ELEMENTARY SCHOOL
ISSAQUAH SCHOOL DISTRICT
400 1st AVE. SE
ISSAQUAH, WASHINGTON 98027

PERMIT SET

SHEET TITLE: PARTIAL TREE RETENTION PLAN

DATE: 4-12-16 PROJECT NO: 191406

REVISIONS:

L3.1

PLOT DATE: 04/13/16 22:13 DRAWING NAME: K:\EDUCATIONAL\issaquah\Clark Elem & Gibson EK HS\Drawings Clark Elem\A1.1 Site\L3.1-2-TreeRetention.dwg

NOTE:
SEE A1.2 FOR NOTES AND LEGENDS

PARTIAL TREE RETENTION PLAN

SCALE: 1"= 20'-0"

Cornerstone
ARCHITECTURAL GROUP
6161 NE 175th Street, Suite 101
Kenmore, Washington 98028
Phone: 206.692.5000
cornerstonearch.com

© Cornerstone Architectural Group

CLARK ELEMENTARY SCHOOL
ISSAQUAH SCHOOL DISTRICT
400 1st AVE. SE
ISSAQUAH, WASHINGTON 98027

PERMIT SET

SHEET TITLE: PARTIAL TREE RETENTION PLAN

DATE: 4-12-16 PROJECT NO: 191406

REVISIONS:

L3.2

PLOT DATE: 04/13/16 22:13 DRAWING NAME: K:\EDUCATIONAL\Issaquah\Clark Elem & Gibson EK HS\Drawings Clark Elem\A1.1 Site\L3.1-2-TreeRetention.dwg

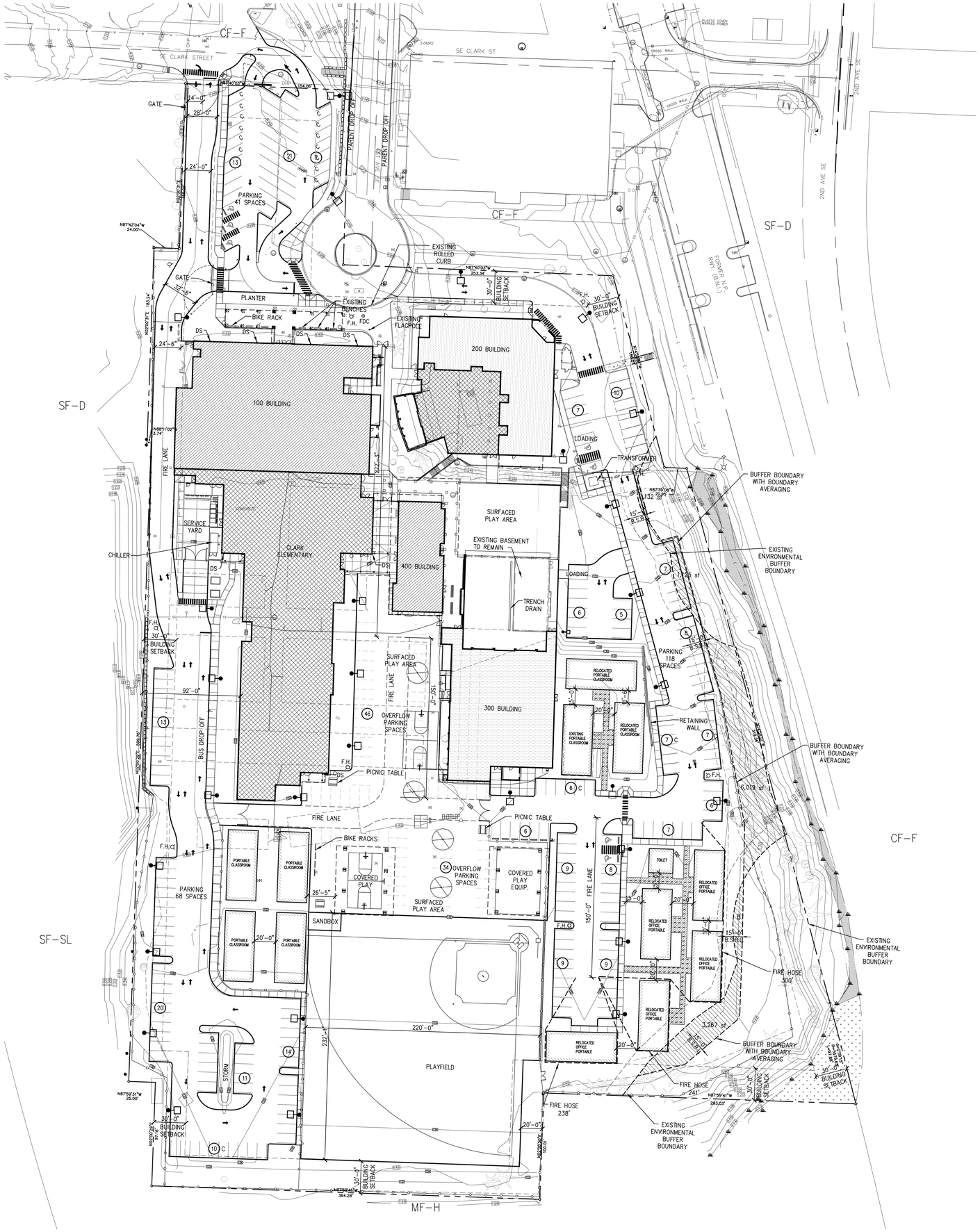

SITE DATA:

SITE AREA:	494,545 SF; 11 ACRES
ZONING:	CF-F COMMUNITY FACILITIES ADJACENT ZONING: MF-H, SF-SL & SF-D
TAX ACCOUNT NO:	2354300270-290-285-315 3424069028-104-140

EXISTING SITE IMPERVIOUS CALCULATIONS:

BUILDINGS	92,542 SF.
ASPHALT	108,279 SF.
GRAVEL	27,668 SF.
CONCRETE	50,622 SF.
TOTAL IMPERVIOUS	279,111 SF.
LANDSCAPING	215,434 SF
TOTAL SITE	494,545 SF.

EXISTING SITE IMPERVIOUS AREA: 279,111 SF = 56% IMPERVIOUS

RECONFIGURED SITE IMPERVIOUS CALCULATIONS:

BUILDINGS	111,818 SF.
ASPHALT	162,304 SF.
CONCRETE	35,997 SF.
TOTAL IMPERVIOUS	310,119 SF.
LANDSCAPING	184,426 SF.

RECONFIGURED SITE IMPERVIOUS AREA: 320,631 SF = 65% IMPERVIOUS

PARKING:

REQUIRED PARKING:

CLARK ELEMENTARY 3 STALL/CLASSROOM (31) =	93 SPACES
GIPSON EK HS 4 STALL/CLASSROOM (10) =	40 SPACES
GIPSON EK HS 1 STALL/EMPLOYEE (20) =	20 SPACES
OFFICE PORTABLES 1 STALL/300 SF =	
(5) 1,850 OFFICE PORTABLES 1 STALL/300 SF=	31 SPACES
PORTABLE CLASSROOMS 3 STALL/CLASSROOM =	42 SPACES
TOTAL STALLS REQUIRED =	226 SPACES

PROPOSED PARKING

STANDARD:	220
ACCESSIBLE:	3
VAN ACCESSIBLE:	4
LOADING:	4
TOTAL STALLS PROVIDED:	231 SPACES
OVERFLOW PARKING ON SURFACED PLAY AREA:	81 SPACES
EVENT PARKING:	312 SPACES

LEGEND

- EXISTING BUILDING TO REMAIN.
- REMODEL CONSTRUCTION & RELOCATED PORTABLES
- NEW CONSTRUCTION & NEW PORTABLES

NORTH

OVERALL SITE PLAN

SCALE: 1"= 40'-0"

Cornerstone
ARCHITECTURAL GROUP
6161 NE 175th Street, Suite 101
Kenmore, Washington 98028
Phone: 206.682.5000
cornerstonearch.com

© Cornerstone Architectural Group

3954 REGISTERED ARCHITECT
STEVEN A. BARNES
STATE OF WASHINGTON

CLARK ELEMENTARY SCHOOL
ISSAQUAH SCHOOL DISTRICT
400 1st AVE. SE
ISSAQUAH, WASHINGTON 98027

PERMIT SET

SHEET TITLE: OVERALL SITE PLAN

PROJECT NO: 191406

DATE: 5-3-16
REVISIONS:

A1.1

PLOT DATE: 04/28/16 11:55 DRAWING NAME: K:\EDUCATIONAL\Issaquah\Clark Elem & Gibson EK HS\Drawings Clark Elem\A1.1 Site\A1.1.dwg

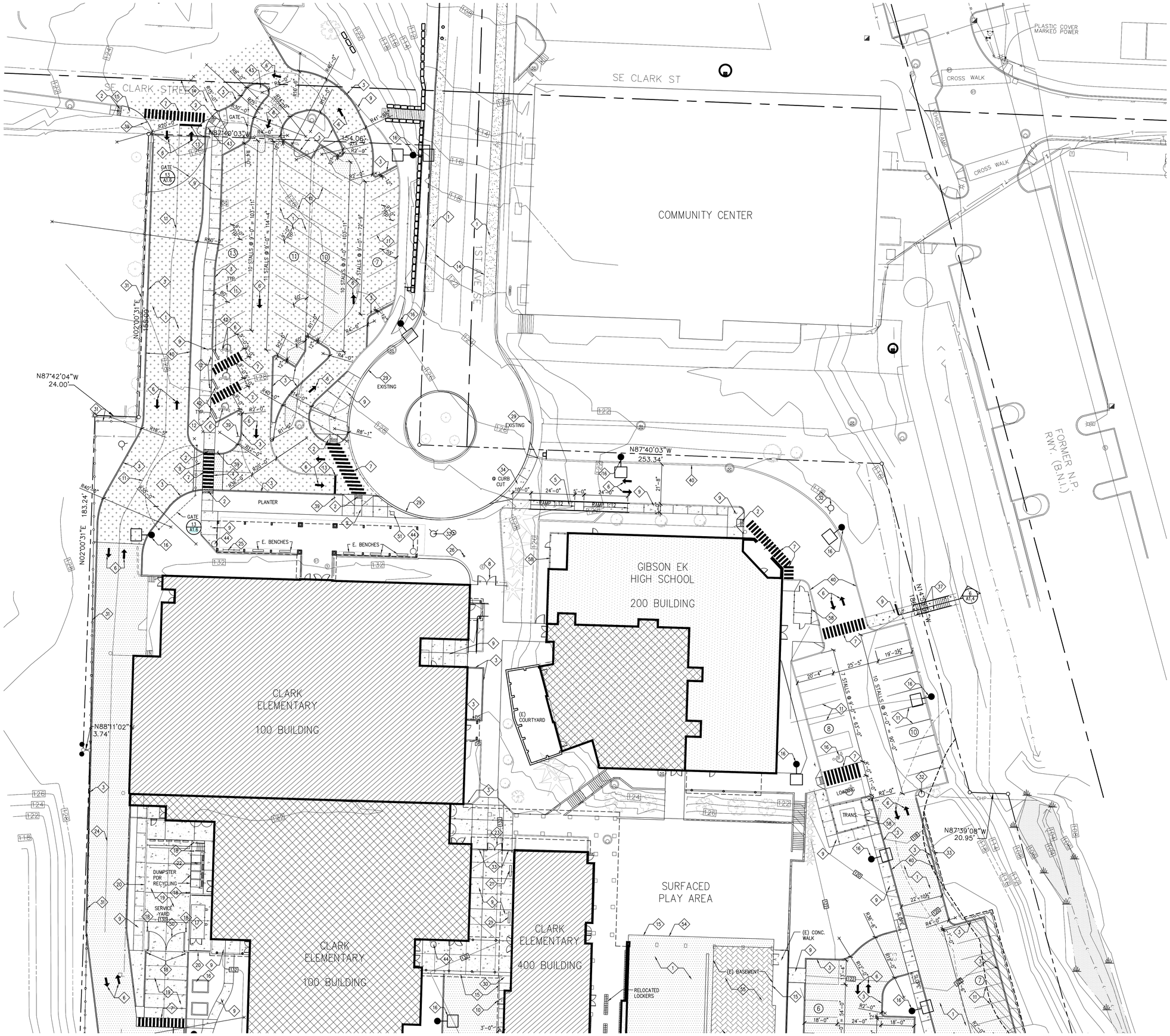

PARTIAL SITE PLAN

SCALE: 1"= 20'-0"

SITE PLAN NOTES

1. ASPHALT PAVING. SEE C6.03 FOR DETAILS OF DIFFERENT PAVING THICKNESS.
2. ADA CURB CUT SEE SHEET C9.06. USE TYPE THAT MEETS CONDITIONS SHOW.
3. CONCRETE CURB PER DETAIL 3/A1.5.
4. RAISED CROSSWALK. SEE 6/C6.04.
5. CONCRETE RAMP WITH CONCRETE CURB PER 1/A1.5 ON ONE SIDE AND RAILINGS BOTH SIDES WITH RAILING EXTENSIONS TOP AND BOTTOM SIMILAR TO 19/A1.6.
6. WHITE PAINTED TRAFFIC ARROW PER DETAIL 4/C10.03 & H.C. SYMBOLS PER DETAIL 1/A10.04
7. CROSSWALK STRIPING PER DETAIL 5/C10.03.
8. EXISTING ENTRY GATES – REMOVE EXISTING REMOVE EXISTING PLEXIGLAS & INSTALL SS PERFORATED METAL PANELS.
9. CONCRETE SIDEWALK PER DETAIL 2, 9 & 16/A1.5 AND LEGEND THIS SHEET.
10. WARP ASPHALT AT DOOR OPENINGS.
11. WHITE PAINTED PARKING STRIPING PER CIVIL SHEETS C10.01 AND C10.02. SEE NUMBER OF PARKING SPACE MARKED THUS: (5)
12. HC PARKING SIGN PER DETAIL 3/C10.04.
13. PAINTED STOP BAR STRIPING PER CITY STANDARDS.
14. WORK IN R.O.W., SEE CIVIL SHEETS.
15. CONCRETE WALK IS FLUSH WITH ASPHALT PAVING SIMILAR TO 4/A1.5.
16. PARKING LOT LIGHT STANDARD & BASE PER ELECTRICAL.
17. CHILLER ON HOUSE KEEPING PAD PER DETAIL 17/A1.6.
18. 8" BOLLARD PER DETAIL 15/A1.5.
19. CONCRETE APRON PER DETAIL 8/A1.6.
20. CMU SCREEN WALL PER DETAIL 17/A1.6.
21. 5' BENCH PER DETAIL 10/A1.5.
22. CONCRETE APRON AREA FOR TRASH CONTAINERS. SLOPE TO DRAIN.
23. 6' WIDE GATE IN CHAIN LINK FENCE PER NOTE 31 OR 33 DEPENDING ON LOCATION.
24. 4" WIDE D.O.T. WHITE PAINTED STRIPE TO DESIGNATE LANES & BUS PARKING, PARENT DROP AREAS, DRIVING LANE, OR 2" LINES @ PLAY AREA LAYOUTS. PAINT STUDENT DROP OFF LANE PER CIVIL SHEETS C10.01 & C10.02. 10" WIDE STOP LINE WHERE SHOWN.
25. BIKE RACK POWDER COATED GRAY PER DETAIL 5/A1.6. VERIFY LOCATION.
26. FLAG POLE POWDER COATED GRAY AND BASE PER DETAIL 14/A1.5.
27. SEGMENTAL RETAINING WALL WITH CHAINLINK FENCE ON TOP, SEE SHEETS 5/A1.4.
28. ⅜" CRUSHED ROCK 3" THICK AROUND PLANTER BEDS AND IN PORTABLE AREAS.
29. ROLLED CURB @ FIRE LANE ENTRY IN BUS LOOP PER 5/C9.03.
30. 2–0" WIDE BY 6" FLUSH CONCRETE CURB BETWEEN BUILDING OR CMU SCREEN WALL & FLUSH WITH ASPHALT PAVING. PROVIDE EXPANSION JOINTS @ 12'o.c.
31. 8' HIGH CHAIN LINK FENCE PAINTED BLACK PER DETAIL 6/A1.6.
32. FIRE HYDRANT W/ REFLECTOR IN DRIVE PER DETAIL 17/A1.5.
33. 6' HIGH CHAIN LINK FENCE PAINTED BLACK W/ TOP RAIL PER DETAIL 6/A1.6 W/ 4'–0" WIDE MAN GATE WHERE SHOWN.
34. CURB CUT SEE 1/C9.03
35. ALL WEATHER PLAYFIELD PER CIVIL.
36. CONCRETE CURB WITH CHAIN LINK FENCE ON TOP AT EDGE OF PLAYFIELD AND SANDBOX PER 2/A1.6.
37. PROVIDE GRAVEL AT TOP OF RETAINING WALL.
38. BASKETBALL COURT ON PAVING PER DETAIL 18/A1.5.
39. CONCRETE CURB AT EDGE OF SANDBOX PER DETAIL 11/A1.5.
40. PAINT "NO PARKING FIRE LANE" (IN WHITE PAINT) ON EDGE OF ASPHALT EVERY 50 FEET. PAINT CURB RED (4" RED STRIPE WHERE THERE IS NO CURB).
41. POLE MOUNTED BASKETBALL BACKSTOPS POWDER COAT GRAY. SIM TO 12/A1.5.
42. WHEEL STOPS. SEE 5/C9.05.
43. SIGN, SEE 6/C10.03.
44. TRASH RECEPTACLE.
45. 20' WIDE CHAIN LINK FENCE GATE PAINTED BLACK. HEIGHT TO MATCH ADJACENT FENCE PER PLAN. SEE 7/A1.6.
46. 12' WIDE CHAIN LINK FENCE GATE PAINTED BLACK. HEIGHT TO MATCH ADJACENT FENCE PER PLAN. SEE 7/A1.6.
47. PICNIC TABLE W/ BENCHES SIMILAR TO 10/A1.5.
48. 4' WIDE CHAIN LINK FENCE GATE PAINTED BLACK. HEIGHT TO MATCH ADJACENT FENCE PER PLAN. SEE 7/A1.6.
49. TETHER BALL POLES POWDER COATED GRAY, BALL & STRIPING. SIMILAR TO 12/A1.5.
50. 8' HIGH X 20' WIDE STEEL GATE PER DETAIL 12 & 18/A1.6.
51. MAILBOX. SET IN CONCRETE WALK W/ STEEL POST SIMILAR TO 12/A1.5.
52. SOFT PLAY SURFACING ON ASPHALT PAVING PER CIVIL W/ PLAY EQUIPMENT. COORDINATE SURFACING W/ PLAYFIELD EQUIPMENT SUPPLIER.
53. HARD SURFACE PLAY SURFACING ON CONCRETE WALK PER NOTE 9. PROVIDE PAINTED STRIPING AS SHOWN.
54. SAWCUT PAVING AND REMOVE AS REQUIRED TO REMOVE BUILDING.
55. WATERPROOF MEMBRANE UNDER ASPHALT PAVING OVER BASEMENT AREA, SEE DETAILS 6 & 7/A1.5.
56. 8' WIDE CHAIN LINK FENCE GATE PAINTED BLACK. HEIGHT TO MATCH ADJACENT FENCE PER PLAN. SEE 7/A1.6.
57. 3' WIDE CHAIN LINK FENCE MAN GATE PAINTED BLACK. HEIGHT TO MATCH ADJACENT FENCE PER PLAN. SEE 7/A1.6.
58. FENCED ENCLOSURE W/ VINYL SLATS AROUND ELECTRICAL VAULT & CONDENSING UNIT.

LEGEND

- ASPHALT PAVING
- CONCRETE WALKS & PAVING
- GROUND OVERLAY ASPHALT
- SEAL COAT
- NEW BUILDING
- ALL WEATHER PLAY FIELD
- COVERED PLAY W/ RUBBER FLOOR
- ASPHALT PAVING OVER WATERPROOFING
- PERVIOUS CONCRETE WALK
- CRUSHED ROCK
- FENCE
- FIRE HYDRANT — FH

Cornerstone
ARCHITECTURAL GROUP
Phone: 206.682.5000
cornerstonearch.com
6161 NE 175th Street, Suite 101
Kenmore, Washington 98028

© Cornerstone Architectural Group

3954 REGISTERED ARCHITECT
STEVEN A. BARNES
STATE OF WASHINGTON

CLARK ELEMENTARY SCHOOL
ISSAQUAH SCHOOL DISTRICT
400 1st AVE. SE
ISSAQUAH, WASHINGTON 98027

PERMIT SET

SHEET TITLE: PARTIAL SITE PLAN

PROJECT NO: 191406

DATE: 5-3-16
REVISIONS:

A1.2

PLOT DATE: 04/28/16 11:55 DRAWING NAME: K:\EDUCATIONAL\Issaquah\Clark Elem & Gibson EK HS\Drawings Clark Elem\A1.1 Site\A1.2–3.dwg

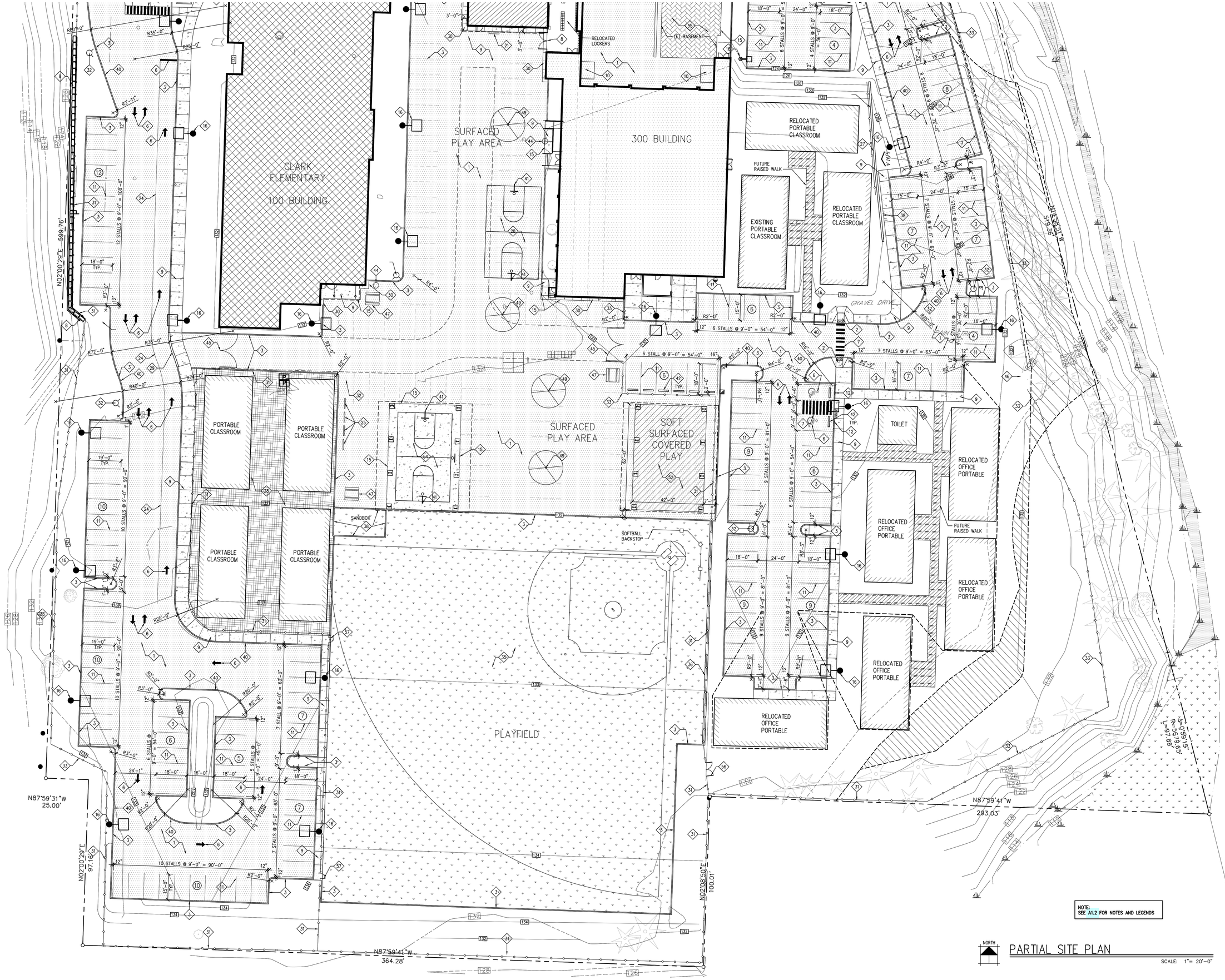

PARTIAL SITE PLAN

SCALE: 1"= 20'-0"

Cornerstone
ARCHITECTURAL GROUP
6161 NE 175th Street, Suite 101
Kenmore, Washington 98028
Phone: 206.682.5000
cornerstonearch.com

© Cornerstone Architectural Group

3954 REGISTERED ARCHITECT
STEVEN A. BARNES
STATE OF WASHINGTON

CLARK ELEMENTARY SCHOOL
ISSAQUAH SCHOOL DISTRICT
400 1st AVE. SE
ISSAQUAH, WASHINGTON 98027

PERMIT SET

SHEET TITLE: PARTIAL SITE PLAN

PROJECT NO: 191406

DATE: 5-3-16

REVISIONS:

A1.3

PLOT DATE: 04/28/16 11:55 DRAWING NAME: K:\EDUCATIONAL\issaquah\Clark Elem & Gibson EK HS\Drawings Clark Elem\A1.1 Site\A1.2-3.dwg

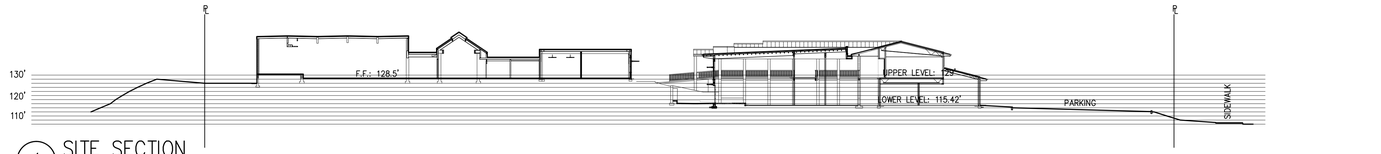

1 SITE SECTION
SiteSection
SCALE: 1"= 30'

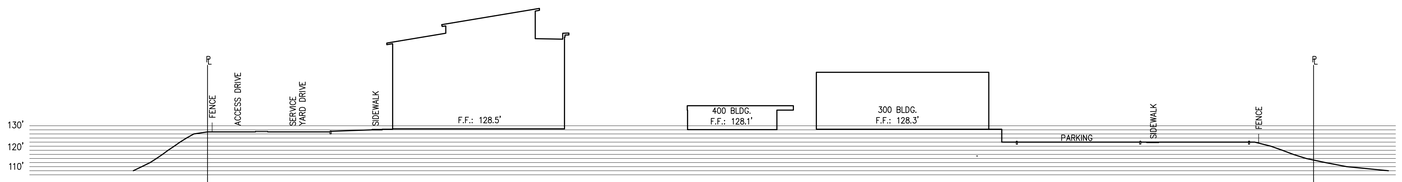

2 SITE SECTION
SiteSection
SCALE: 1"= 30'

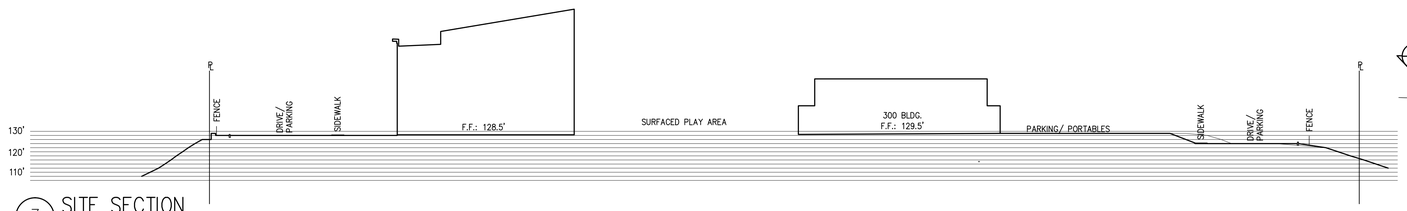

3 SITE SECTION
SiteSection
SCALE: 1"= 30'

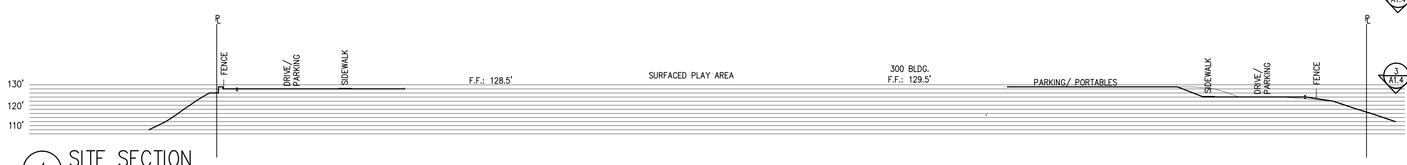

4 SITE SECTION
SiteSection
SCALE: 1"= 30'

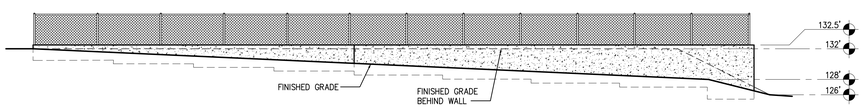

5 RETAINING WALL
Retaining Wall

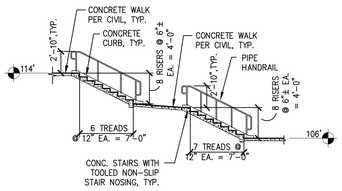

6 CONCRETE STAIR
StairSections
SCALE: 1/8"= 1'-0"

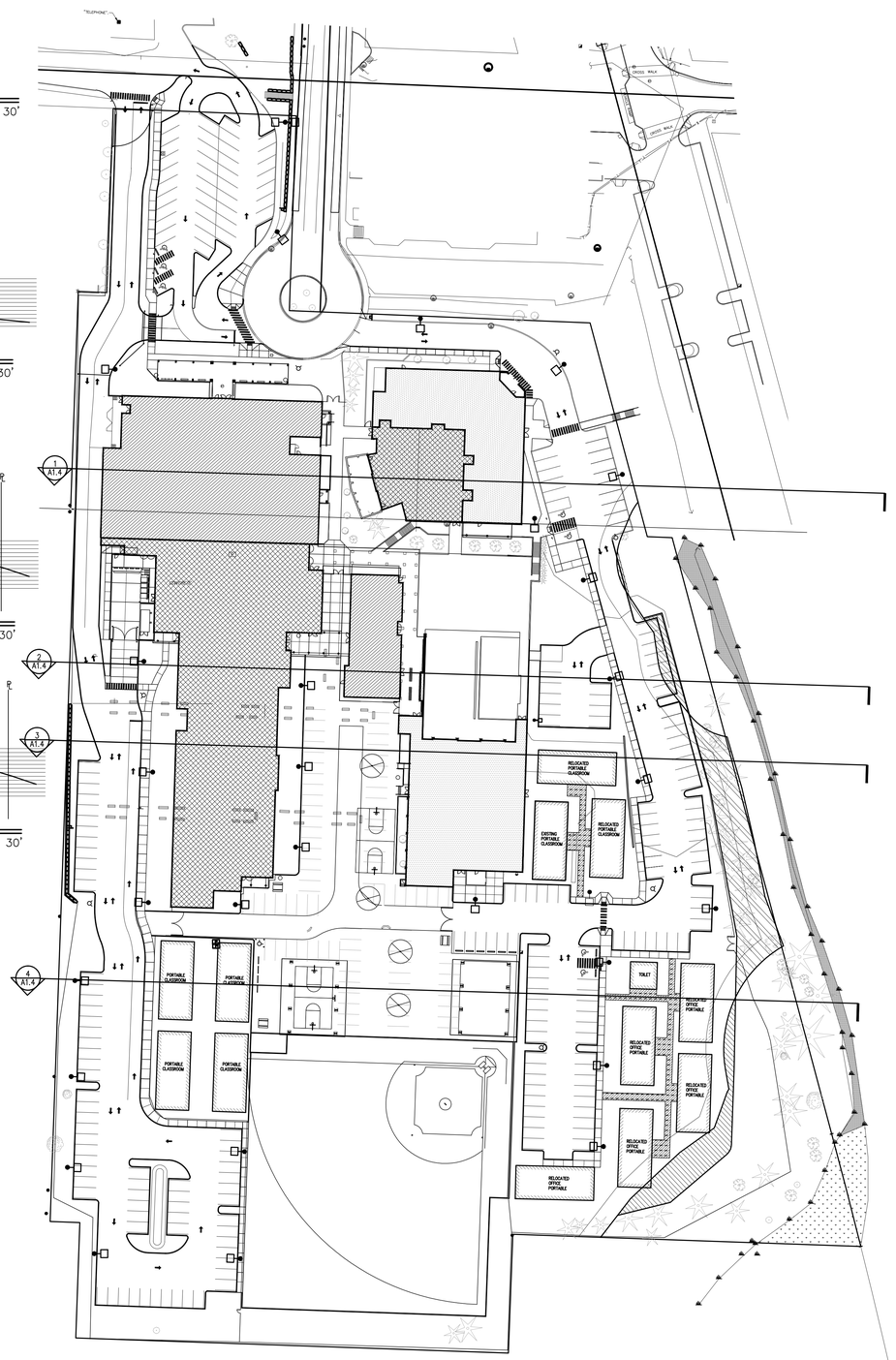

NORTH
OVERALL SITE PLAN
SCALE: 1"= 50'-0"

Cornerstone
ARCHITECTURAL GROUP
6161 NE 175th Street, Suite 101
Kenmore, Washington 98028
Phone: 206.682.5000
cornerstonearch.com

© Cornerstone Architectural Group

3054 REGISTERED ARCHITECT
STEVEN A. BARNES
STATE OF WASHINGTON

CLARK ELEMENTARY SCHOOL
ISSAQUAH SCHOOL DISTRICT
400 1st AVE. SE
ISSAQUAH, WASHINGTON 98027

PERMIT SET
SHEET TITLE: SITE SECTIONS

DATE: 4-15-16
REVISIONS:

PROJECT NO: 191406

A1.4

PLOT DATE: 04/08/16 15:13
DRAWING NAME: K:\EDUCATIONAL\Issaquah\Clark Elem & Gibson EK HS\Drawings Clark Elem\A1.4 Site Section\A1.4.dwg

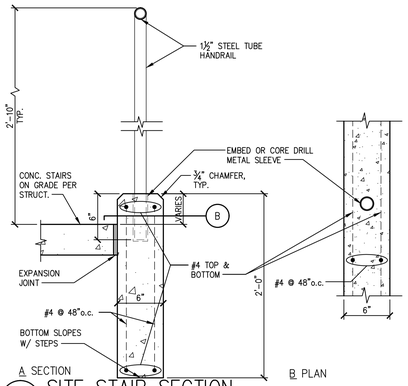

1 SITE STAIR SECTION
SIT1006A SCALE: 1 1/2"= 1'-0"

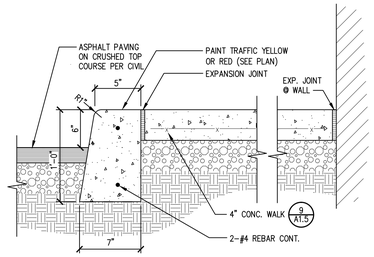

2 CURB DETAIL @ WALK
SIT0201A SCALE: 1 1/2"= 1'-0"

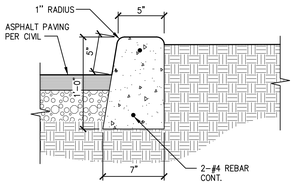

3 CURB DETAIL @ PLANTER
SIT0201B SCALE: 1 1/2"= 1'-0"

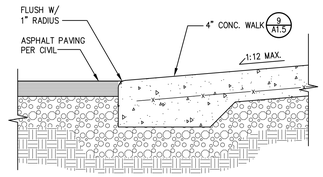

4 SIDEWALK @ BLDG. ENTRY
SIT0712A SCALE: 1 1/2"= 1'-0"

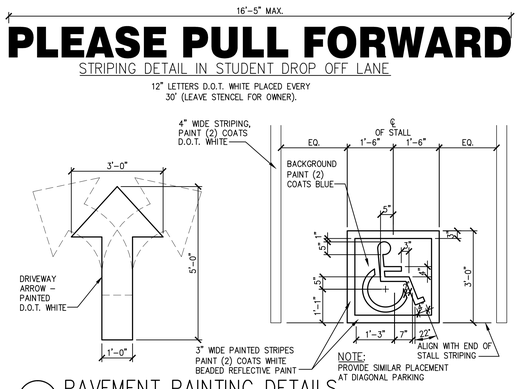

6 PAVEMENT PAINTING DETAILS
SIT0810D SCALE: 1/2"= 1'-0"

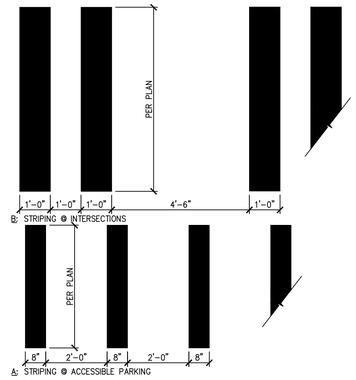

7 STRIPING DETAIL
SIT0812B SCALE: 1/2"= 1'-0"

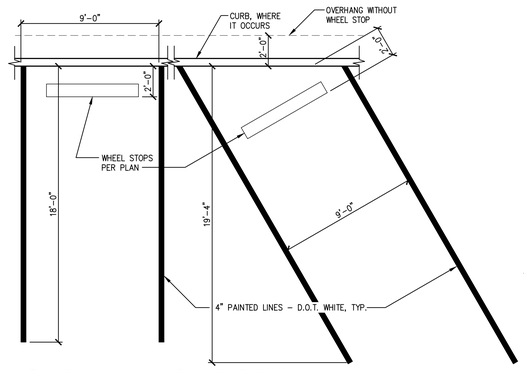

8 PAINTED PARKING STRIPE
SIT0809F SCALE: 1/4"= 1'-0"

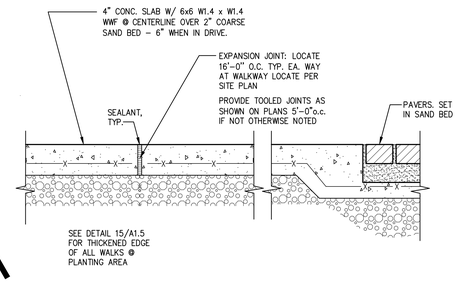

9 CONCRETE WALK DETAIL
SIT0711B SCALE: 1 1/2"= 1'-0"

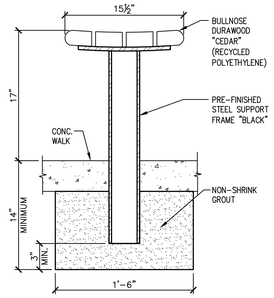

10 BENCH DETAIL
SIT0513A SCALE: 1 1/2"= 1'-0"

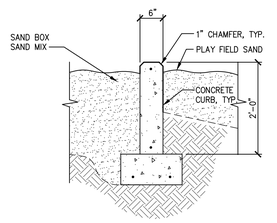

11 SAND BOX
SIT0237C SCALE: 3/4"= 1'-0"

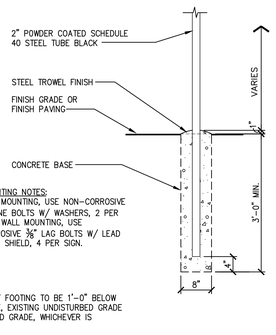

12 TRAFFIC SIGN POST
SIT1305A SCALE: 3/4"= 1'-0"

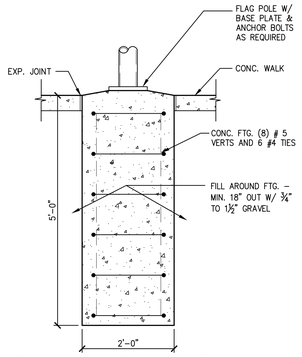

14 FLAG POLE BASE
SIT0505A SCALE: 3/4"= 1'-0"

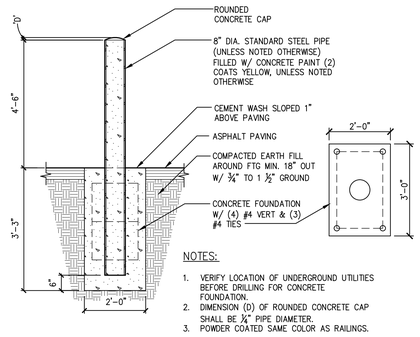

15 EXTERIOR PIPE BOLLARD
SIT0102B SCALE: 1/2"= 1'-0"

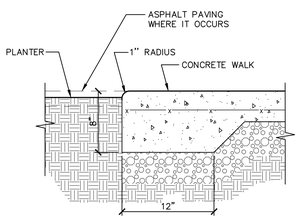

16 SIDEWALK/ SLAB EDGE @ PLANTER
SIT0705A SCALE: 1 1/2"= 1'-0"

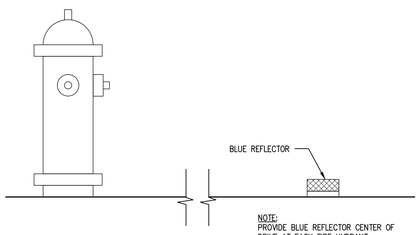

17 REFLECTOR DETAIL
SIT1307A N.T.S

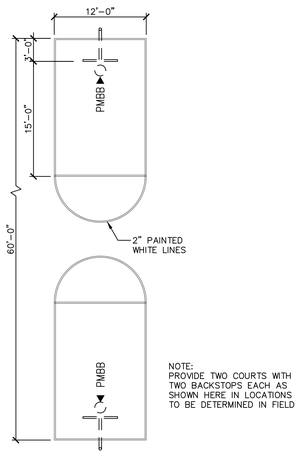

18 BASKETBALL COURT
SIT1501A SCALE: 1/8"= 1'-0"

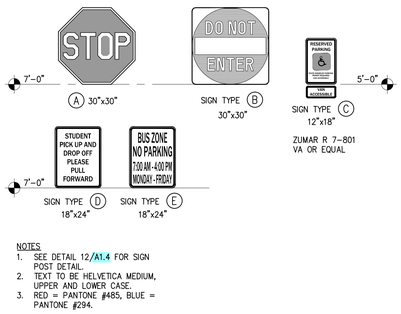

19 TRAFFIC SIGNS
SIT1303C SCALE: 1/2" = 1'-0"

COORDINATE WITH CIVIC CURBING REQUIREMENTS

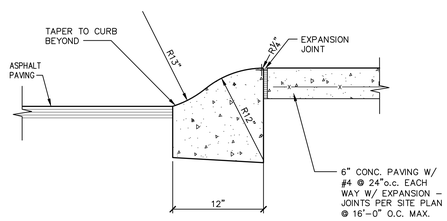

20 ROLLED CURB DETAIL
SIT0204C SCALE: 1 1/2"= 1'-0"

Cornerstone
ARCHITECTURAL GROUP
6161 NE 175th Street, Suite 101
Kenmore, Washington 98028
Phone: 206.682.5000
cornerstonearch.com

© Cornerstone Architectural Group

3054 REGISTERED ARCHITECT STEVEN A. BARNES STATE OF WASHINGTON

CLARK ELEMENTARY SCHOOL
ISSAQUAH SCHOOL DISTRICT
400 1st AVE. SE
ISSAQUAH, WASHINGTON 98027

PERMIT SET
SHEET TITLE: SITE DETAILS

DATE: 4-15-16
REVISIONS:

PROJECT NO: 191406

A1.5

PLOT DATE: 04/08/16 15:13 DRAWING NAME: K:\EDUCATIONAL\Issaquah\Clark Elem & Gibson EK HS\Drawings Clark Elem\A1.5\A1.5.dwg

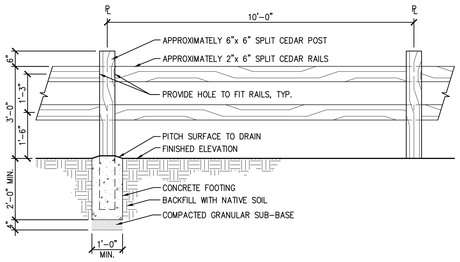

1 SPLIT RAIL FENCE
SIT0440A
SCALE: 1/2"= 1'-0"

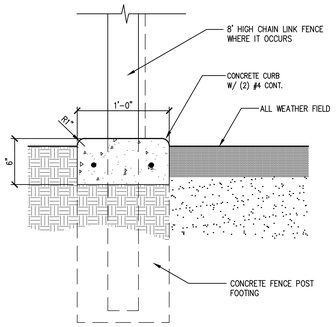

2 ALL WEATHER FIELD PERIMETER CURB
SIT0213A
SCALE: 1 1/2"= 1'-0"

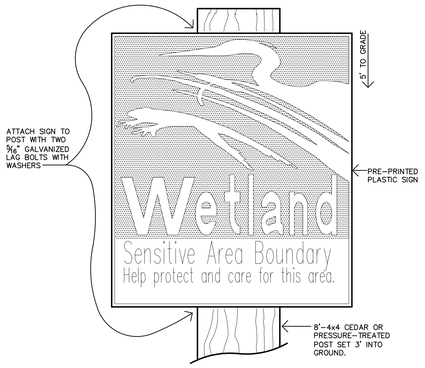

3 WETLAND/SENSITIVE AREA SIGN
SIT0440A
SCALE: NTS

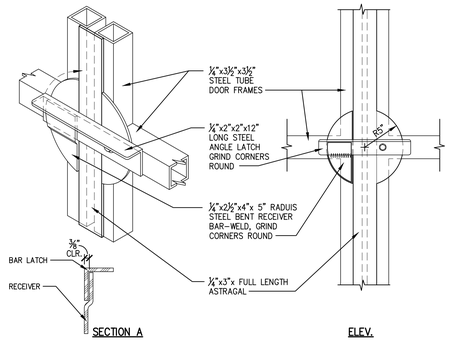

4 BAR LATCH DETAIL
SIT0417D
SCALE: 1 1/2"= 1'-0"

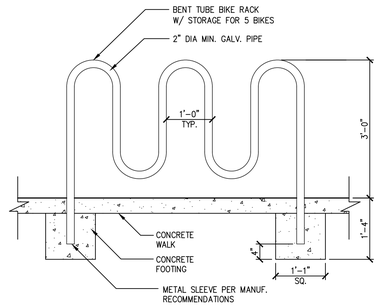

5 BIKE RACK
SIT0504A
SCALE: 3/4"= 1'-0"

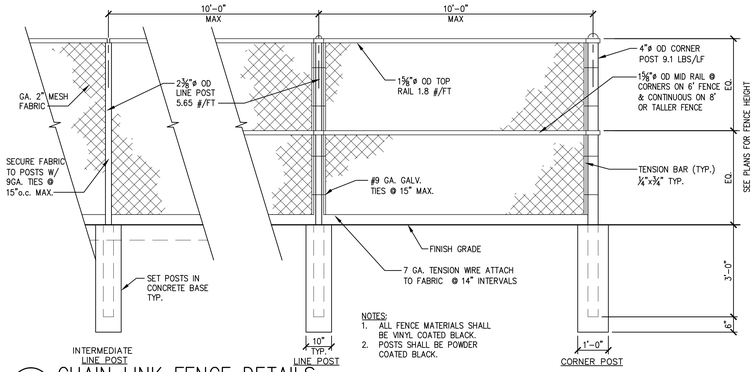

NOTES:
1. ALL FENCE MATERIALS SHALL BE VINYL COATED BLACK.
2. POSTS SHALL BE POWDER COATED BLACK.

6 CHAIN LINK FENCE DETAILS
SIT0407A
SCALE: 1/2"= 1'-0"

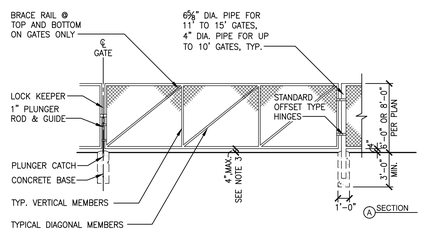

NOTES:
1. WELD ALL PIPE CONNECTIONS.
2. NOTCH CURBS OR PROVIDE SPEED BUMP/HUMP TO MAINTAIN 4" HEIGHT BETWEEN BOTTOM OF GATE AND PAVING.
3. PROVIDE EMBEDDED METAL SLEEVE AND HOLD OPEN FOR EACH LEAF OF GATE.
4. POSTS & GATE FRAMES SHALL BE POWDER COATED BLACK.
5. ALL CHAIN LINK FENCE MATERIALS SHALL BE VINYL COATED BLACK.

7 PERIMETER FENCING-SWINGING GATE
SIT0430A
SCALE: 3/16"= 1'-0"

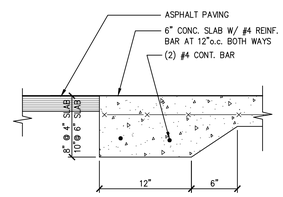

8 CONCRETE APRON
SIT0710A
SCALE: 1 1/2"= 1'-0"

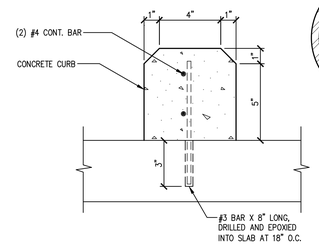

SECTION AA

10 WHEEL STOP DETAIL
SIT0209A
SCALE: 3"= 1'-0"

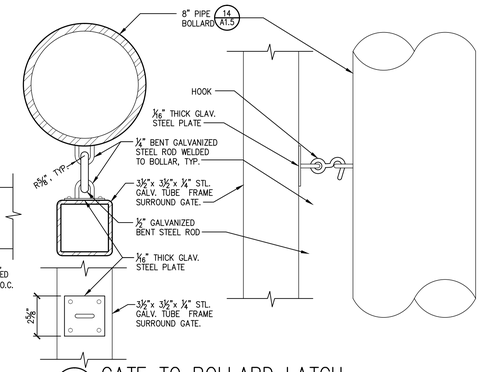

11 GATE TO BOLLARD LATCH
SIT0108A
SCALE: 3"= 1'-0"

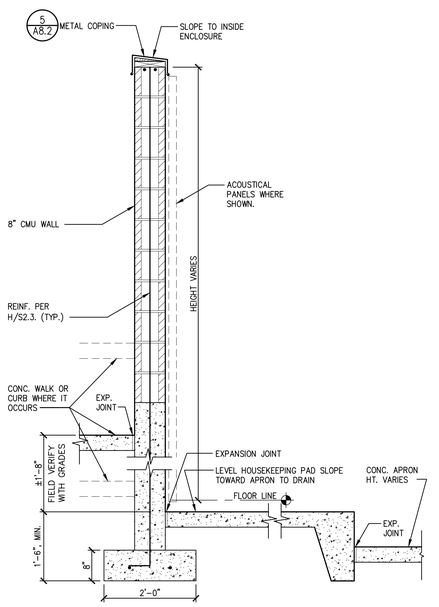

17 CMU WALL SECTION
SIT0404F
SCALE: 3/4"= 1'-0"

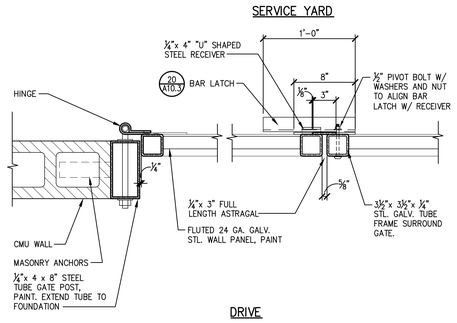

12 STEEL GATE PLAN DETAIL
SIT0416F
SCALE: 1 1/2"= 1'-0"

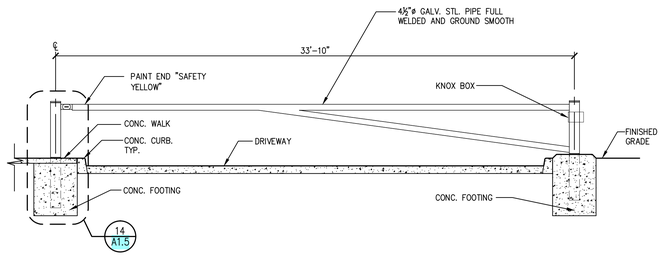

13 GATE DETAIL
SIT0410A
SCALE: 1/4"= 1'-0"

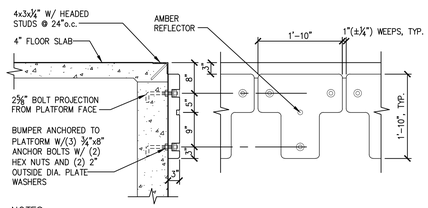

NOTES:
1. BUMPERS TO BE MADE OF RUBBER REINFORCED W/NYLON; RAYON; OR A COMBINATION OF BOTH WITH ALL CORNERS ROUNDED.
2. ALL STEEL (INCLUDING BOLTS) SHALL BE GALVANIZED.

15 LOAD DOCK EDGE & BUMPERS
SLB1101A
SCALE: 3/4"= 1'-0"

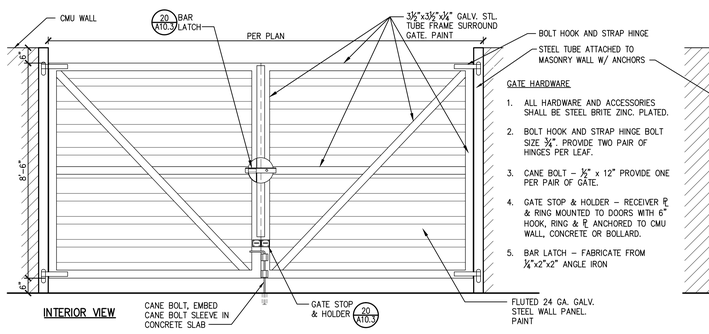

GATE HARDWARE
1. ALL HARDWARE AND ACCESSORIES SHALL BE STEEL BRITE ZINC. PLATED.
2. BOLT HOOK AND STRAP HINGE BOLT SIZE 3/4". PROVIDE TWO PAIR OF HINGES PER LEAF.
3. CANE BOLT – 1/2" x 12" PROVIDE ONE PER PAIR OF GATE.
4. GATE STOP & HOLDER – RECEIVER ℄ & RING MOUNTED TO DOORS WITH 6" HOOK, RING & ℄ ANCHORED TO CMU WALL, CONCRETE OR BOLLARD.
5. BAR LATCH – FABRICATE FROM 1/4"x2"x2" ANGLE IRON

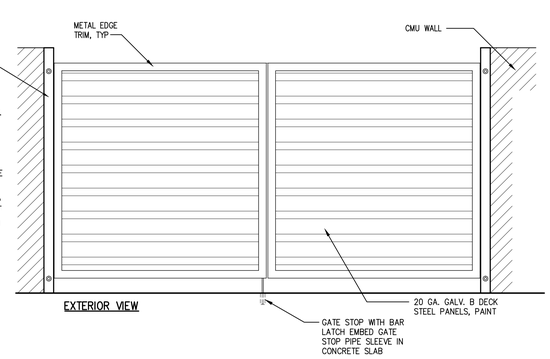

18 STEEL GATE DETAIL
SIT0435A
SCALE: 1/2"= 1'-0"

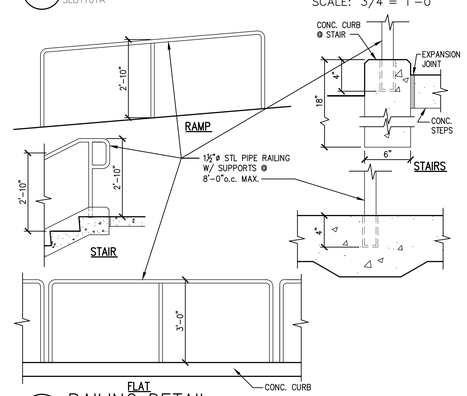

19 RAILING DETAIL
RLG0111B
SCALE: NTS

Cornerstone
ARCHITECTURAL GROUP
6161 NE 175th Street, Suite 101
Kenmore, Washington 98028
Phone: 206.682.5000
cornerstonearch.com

© Cornerstone Architectural Group

3054 REGISTERED ARCHITECT STEVEN A. BARNES STATE OF WASHINGTON

CLARK ELEMENTARY SCHOOL
ISSAQUAH SCHOOL DISTRICT
400 1st AVE. SE
ISSAQUAH, WASHINGTON 98027

PERMIT SET
SHEET TITLE: SITE DETAILS
DATE: 4-15-16
REVISIONS:
PROJECT NO: 191406

A1.6

PLOT DATE: 04/08/16 14:57 DRAWING NAME: K:\EDUCATIONAL\Issaquah\Clark Elem & Gibson EK HS\Drawings Clark Elem\A1.6 Site Details\A1.6.dwg

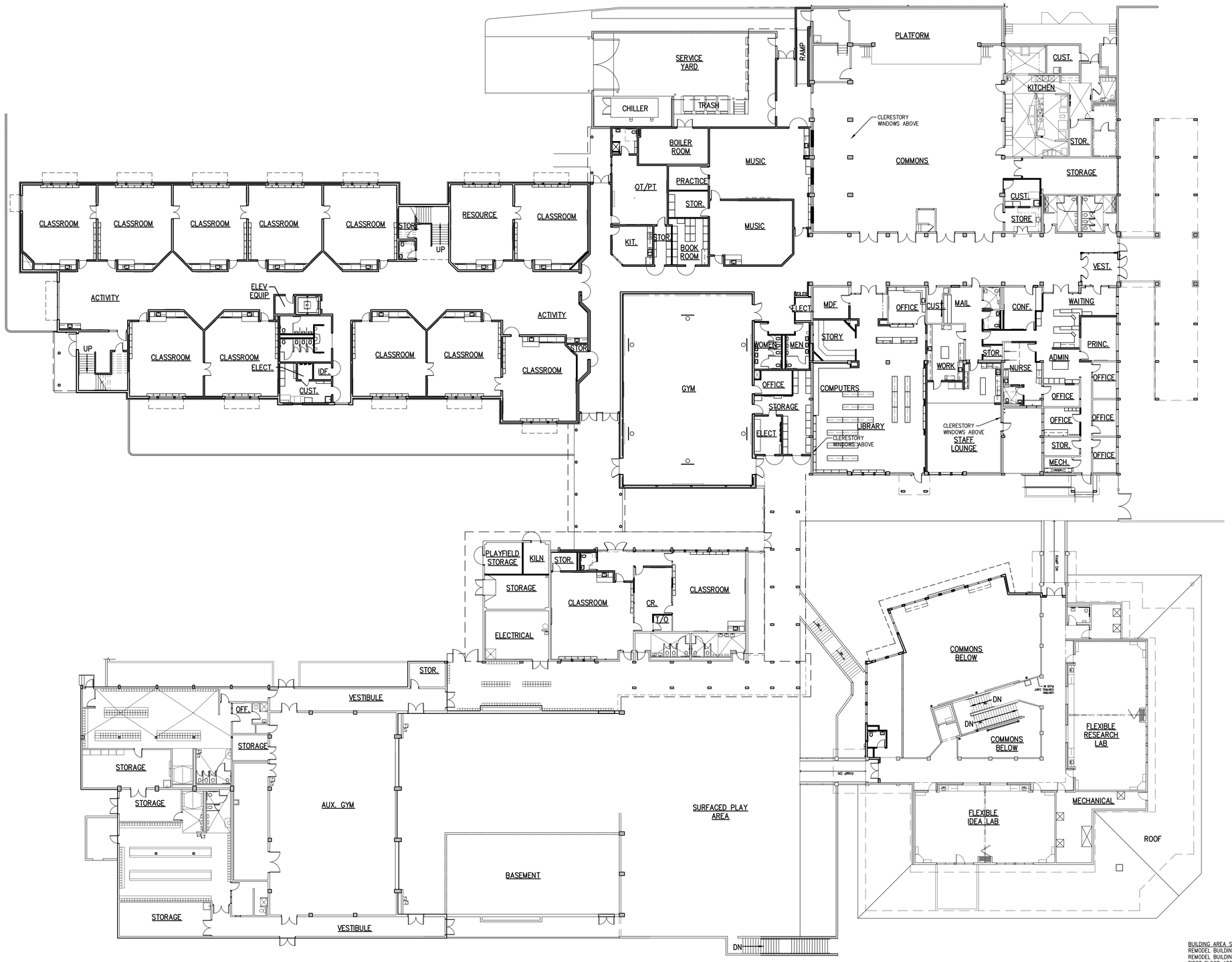

CLASSROOM COUNT

	BASE	ALT
FIRST FLOOR	10	1
SECOND FLOOR	8	1
THIRD FLOOR	8	1
400 BUILDING	2	0
TOTAL	28 + 3 = 31 CLASSROOMS	

BUILDING AREA SUMMARY

REMODEL BUILDING 100:	20,873 SF
REMODEL BUILDING 400:	2,886 SF
FIRST FLOOR ADDITION:	28,760–77–945 = 27,738 SF
SECOND FLOOR:	13,671–945= 12,726 SF
THIRD FLOOR:	13,671–945= 12,726 SF
TOTAL BASE BID BUILDING AREA:	76,949 SF
FIRST FLOOR EXPANSION:	945 SF
SECOND FLOOR EXPANSION:	945 SF
THIRD FLOOR EXPANSION:	945 SF
TOTAL EXPANSION ALT:	2,835 SF
TOTAL BUILDING AREA:	79,784 SF
COVERED PLAY BUILDINGS:	2,600 X 2 = 5,200 SF
REMODEL 400 BLDG TOILETS:	444 SF

NORTH

OVERALL FIRST FLOOR PLAN

A2.0

SCALE: 1/16"= 1'–0"

Cornerstone
ARCHITECTURAL GROUP
6161 NE 175th Street, Suite 101
Kenmore, Washington 98028
Phone: 206.682.5000
cornerstonearch.com

© Cornerstone Architectural Group

3954 REGISTERED ARCHITECT
STEVEN A. BARNES
STATE OF WASHINGTON

CLARK ELEMENTARY SCHOOL
ISSAQUAH SCHOOL DISTRICT
400 1st AVE. SE
ISSAQUAH, WASHINGTON 98027

PERMIT SET

SHEET TITLE: OVERALL FIRST FLOOR PLAN

DATE: 4-15-16

PROJECT NO: 191406

REVISIONS:

A2.0

PLOT DATE: 04/18/16 10:14 DRAWING NAME: K:\EDUCATIONAL\Issaquah\Clark Elem & Gibson EK HS\Drawings Clark Elem\A2 Floor Plans\A2.0.dwg

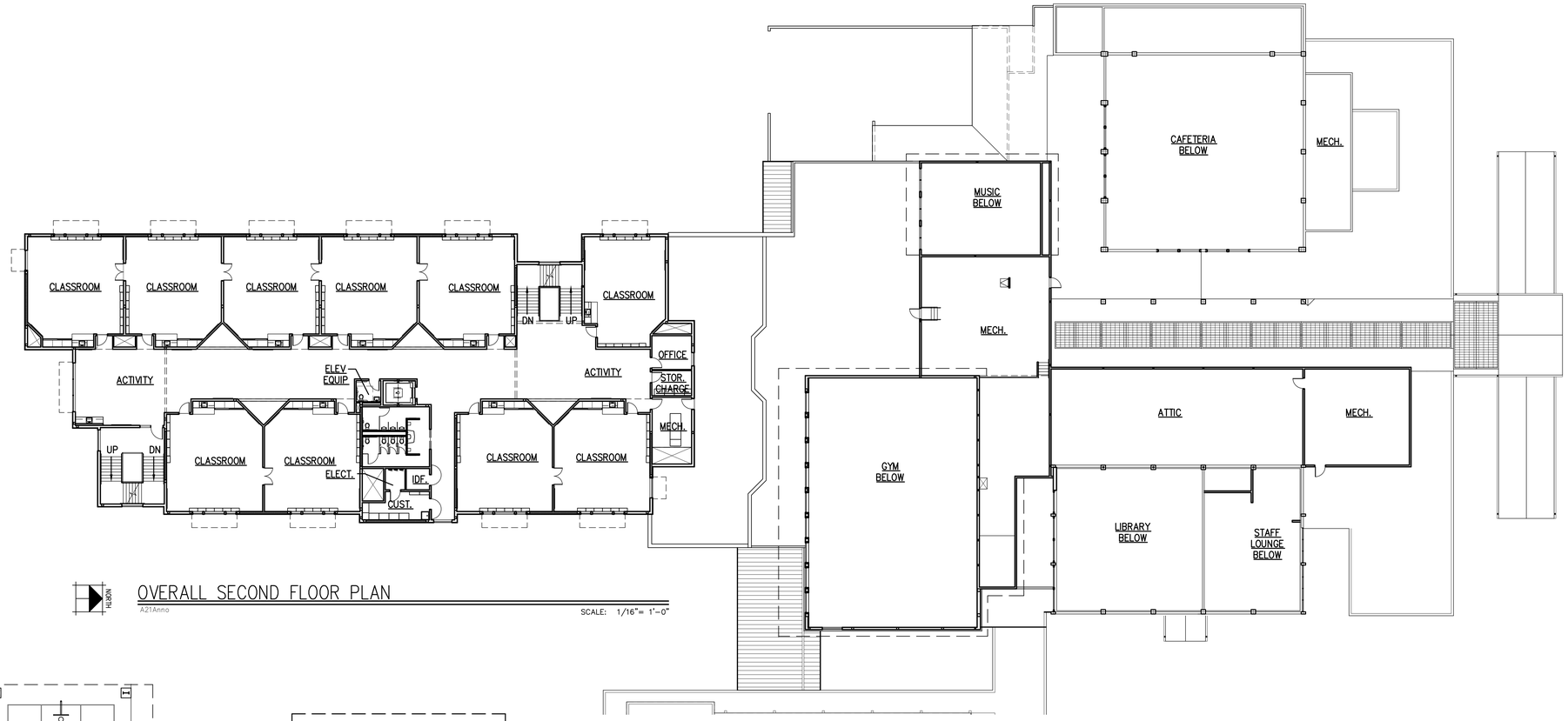

NORTH

OVERALL SECOND FLOOR PLAN

A21Anno

SCALE: 1/16"= 1'-0"

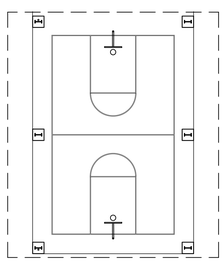

NORTH

COVERED PLAY

A2.1

SCALE: 1/16"= 1'-0"

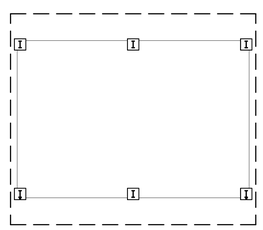

NORTH

SOFT COVERED PLAY

A2.1

SCALE: 1/16"= 1'-0"

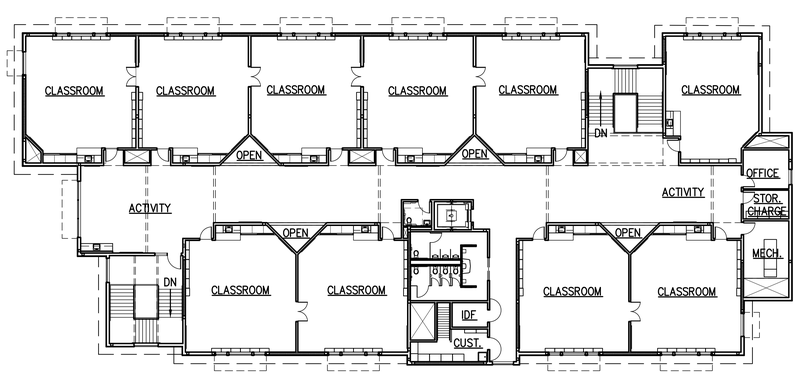

NORTH

OVERALL THIRD FLOOR PLAN

A22Anno

SCALE: 1/16"= 1'-0"

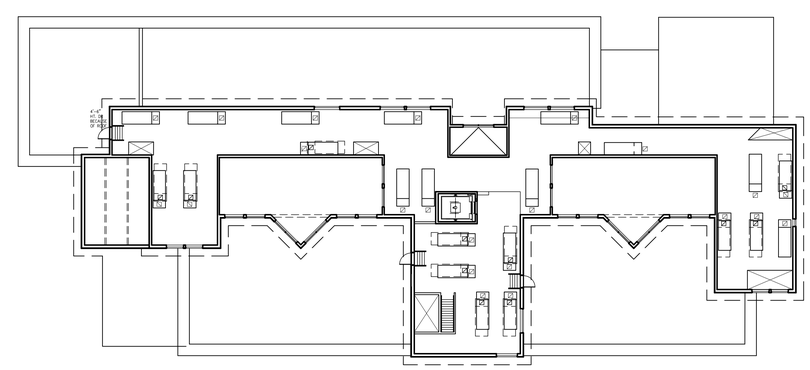

NORTH

OVERALL EQUIPMENT PLATFORM FLOOR PLAN

A23Anno

SCALE: 1/16"= 1'-0"

Cornerstone
ARCHITECTURAL GROUP
6161 NE 175th Street, Suite 101
Kenmore, Washington 98028
Phone: 206.682.5000
cornerstonearch.com

© Cornerstone Architectural Group

3054 REGISTERED ARCHITECT
STEVEN A. BARNES
STATE OF WASHINGTON

CLARK ELEMENTARY SCHOOL
ISSAQUAH SCHOOL DISTRICT
400 1st AVE. SE
ISSAQUAH, WASHINGTON 98027

PERMIT SET

SHEET TITLE: OVERALL 2ND, 3RD, EQUIP. PLATFORM FLOOR PLANS & PLAY BLDG.'S

DATE: 4-15-16

PROJECT NO: 191406

REVISIONS:

A2.1

PLOT DATE: 04/18/16 10:15 DRAWING NAME: K:\EDUCATIONAL\Issaquah\Clark Elem & Gibson EK HS\Drawings Clark Elem\A2 Floor Plans\A2.1.dwg

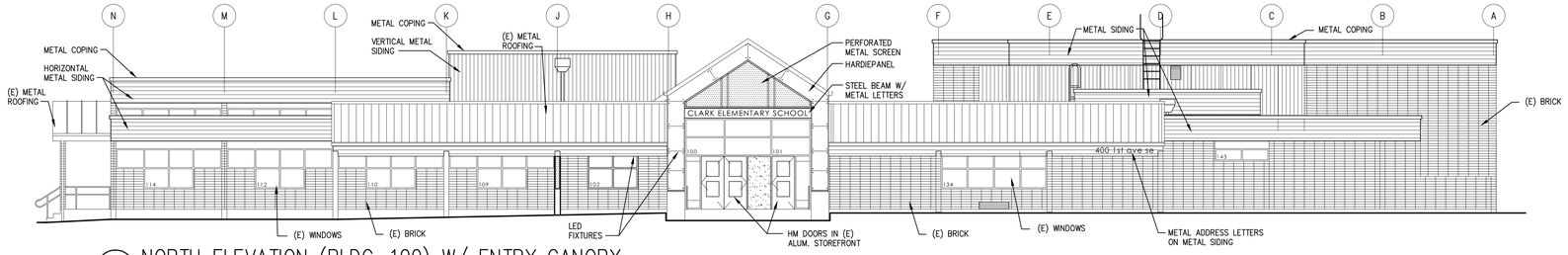

1 NORTH ELEVATION (BLDG. 100) W/ ENTRY CANOPY
A3.1-3

SCALE: 1/8"= 1'-0"

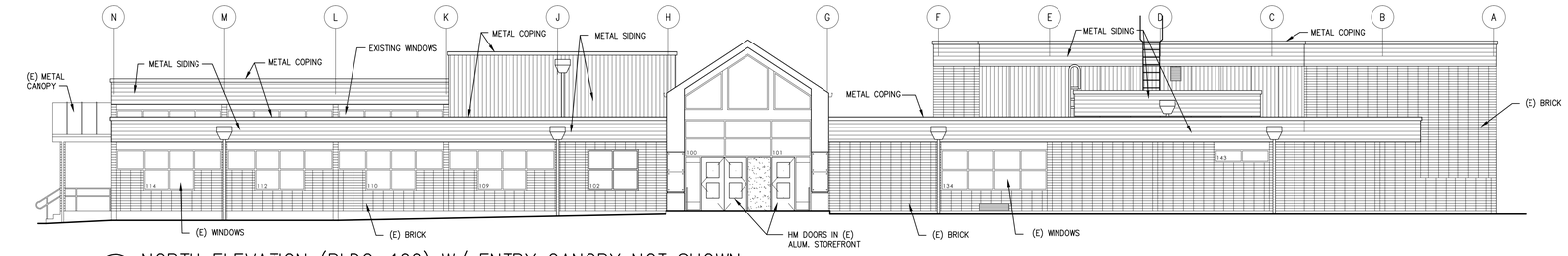

1 NORTH ELEVATION (BLDG. 100) W/ ENTRY CANOPY NOT SHOWN
A3.1-3

SCALE: 1/8"= 1'-0"

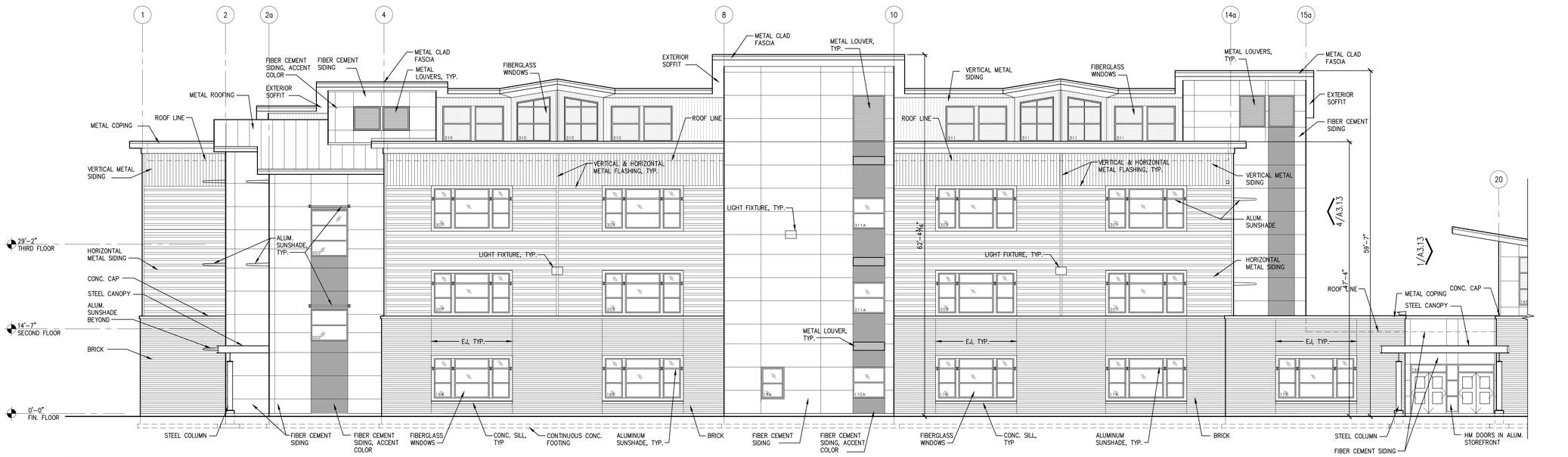

3 PARTIAL EAST ELEVATION
A3.1-3

SCALE: 1/8"= 1'-0"

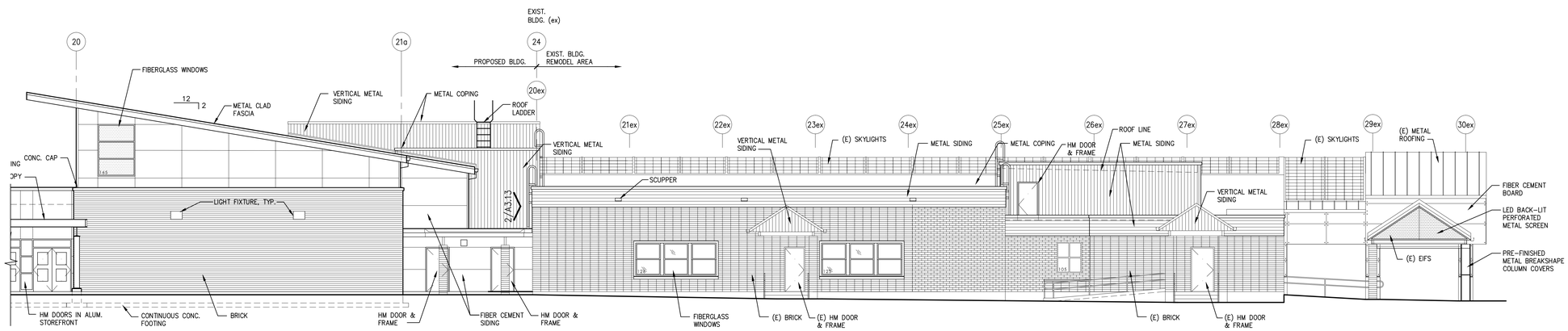

3 PARTIAL EAST ELEVATION (CONTINUED)
A3.1-3

SCALE: 1/8"= 1'-0"

MATERIAL SCHEDULE

MASONRY COLORS

BRICK: STANDARD BRICK

MISCELLANEOUS

MTL CONNECTORS & EXPOSED STEEL:	SHERWIN WILLIAMS SW7075 "WEB GRAY"
ALUM SUNSHADE:	CLEAR ANODIZED
ALUM. WINDOWS/STOREFRONT:	CLEAR ANODIZED
FIBERGLASS WINDOWS	LIGHT GRAY
METAL LOUVERS:	RUSKIN STONE GRAY (78)

METAL SIDING & ROOFING

VERTICAL MTL SIDING:	AEP SPAN COOL ZACTIQUE II
HORIZONTAL MTL SIDING:	AEP SPAN COOL PARCHMENT
METAL COPING:	AEP SPAN COOL ZACTIQUE II
METAL ROOFING:	AEP SPAN COOL ZACTIQUE II

FIBER CEMENT SIDING

FIBER CEMENT SIDING:	SHERWIN WILLIAMS SW6151 "QUIVER TAN"

PAINT COLORS

STEEL COLS., BEAMS & CONNECTORS:	SHERWIN WILLIAMS SW7075 "WEB GRAY"
MTL GUTTERS & FASCIA:	AEP SPAN COOL ZACTIQUE II
HM DOORS & FRAMES:	SHERWIN WILLIAMS SW7075 "WEB GRAY"
FIBER CEMENT SOFFITS & TRIM:	SHERWIN WILLIAMS SW7075 "WEB GRAY"
CEDAR SOFFIT:	CLEAR SEALER – (2) COATS MIN.

POWDER COAT COLORS

GUARDRAILS, STAIR PANELS & HANDRAILS, FENCING:	CARDINAL INDUSTRIAL FINISHES T064-GR660

NOTES

1. SACK ALL EXTERIOR CONCRETE WALLS & BASES.
2. AT HORIZONTAL & VERTICAL METAL SIDING CORNER TRIM & VERTICAL HORIZONTAL TRIM IS SAME COLOR AS SIDING. SEE 7/A10.1.
3. STEEL GUARDRAIL SEE DETAILS 12&13/A10.1.
4. METAL LOUVERS SEE LOUVER TYPES A6.2.
5. WINDOWS & STOREFRONT SEE WINDOW & STOREFRONT TYPES A6.2.
6. METAL SIDING & TRIM SEE DETAILS 9/A6.7 & 7/A10.1.
7. FIBER CEMENT SIDING SEE DETAIL 1/A10.3.
8. CMU VENEER EXPANSION JOINT SEE A2.9 WALL TYPES.
9. BEARING CMU EXPANSION JOINT SEE A2.9 WALL TYPES.

Cornerstone
ARCHITECTURAL GROUP
6161 NE 175th Street, Suite 101
Kenmore, Washington 98028
Phone: 206.682.5000
cornerstonearch.com

© Cornerstone Architectural Group

3054 REGISTERED ARCHITECT
STEVEN A. BARNES
STATE OF WASHINGTON

CLARK ELEMENTARY SCHOOL
ISSAQUAH SCHOOL DISTRICT
400 1st AVE. SE
ISSAQUAH, WASHINGTON 98027

PERMIT SET
SHEET TITLE: EXTERIOR ELEVATIONS

DATE: 4-15-16
PROJECT NO: 191406
REVISIONS:

A3.11

PLOT DATE: 04/18/16 10:14 DRAWING NAME: K:\EDUCATIONAL\issaquah\Clark Elem & Gibson EK HS\Drawings Clark Elem\A3 Elevations\A3.11-14-100.dwg

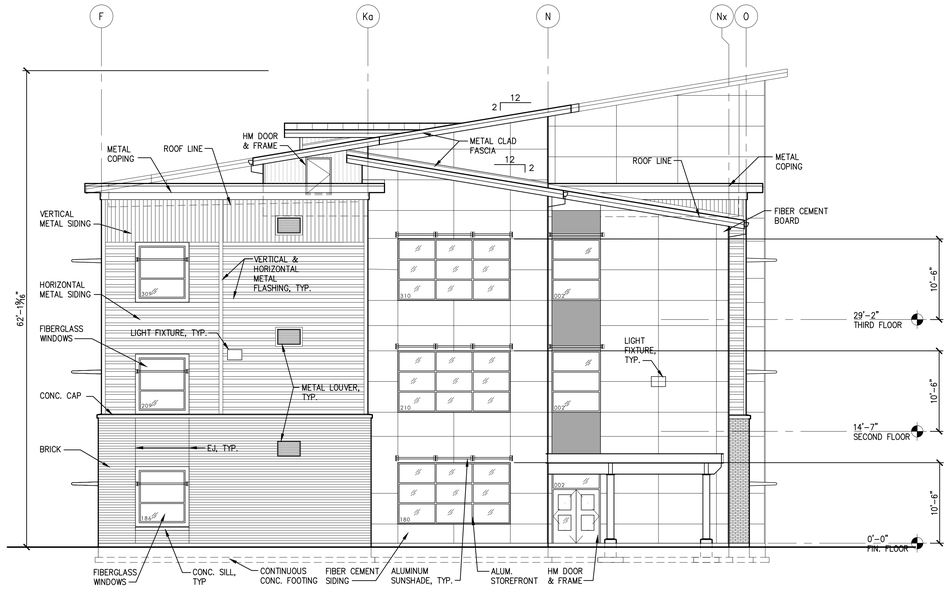

1 SOUTH ELEVATION
A3.1-3

SCALE: 1/8"= 1'-0"

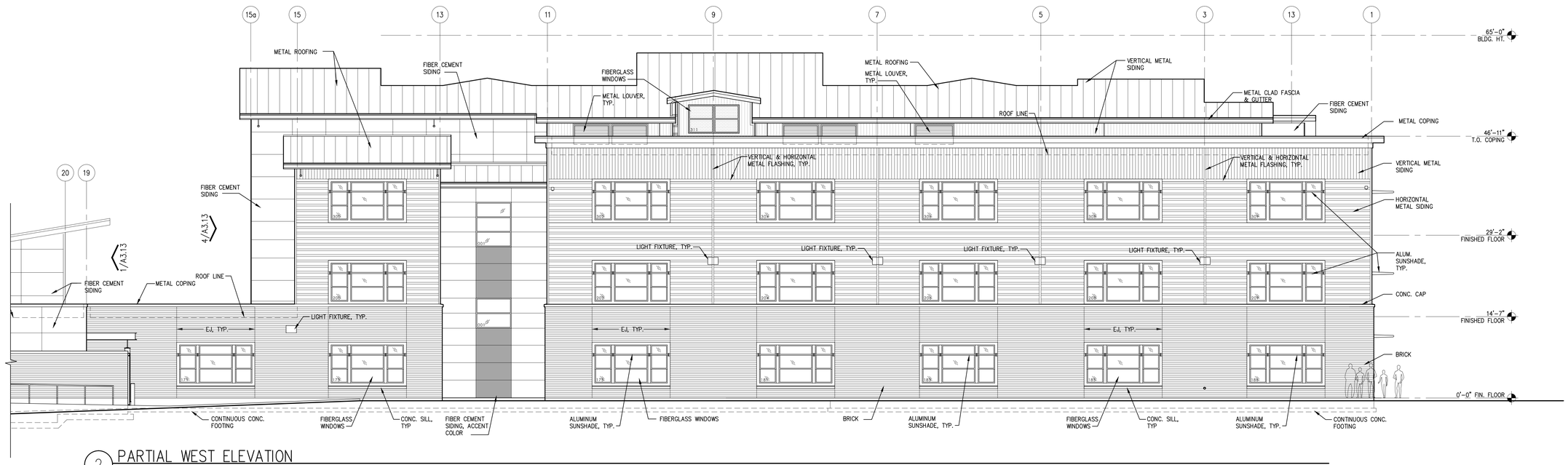

2 PARTIAL WEST ELEVATION
A3.1-3

SCALE: 1/8"= 1'-0"

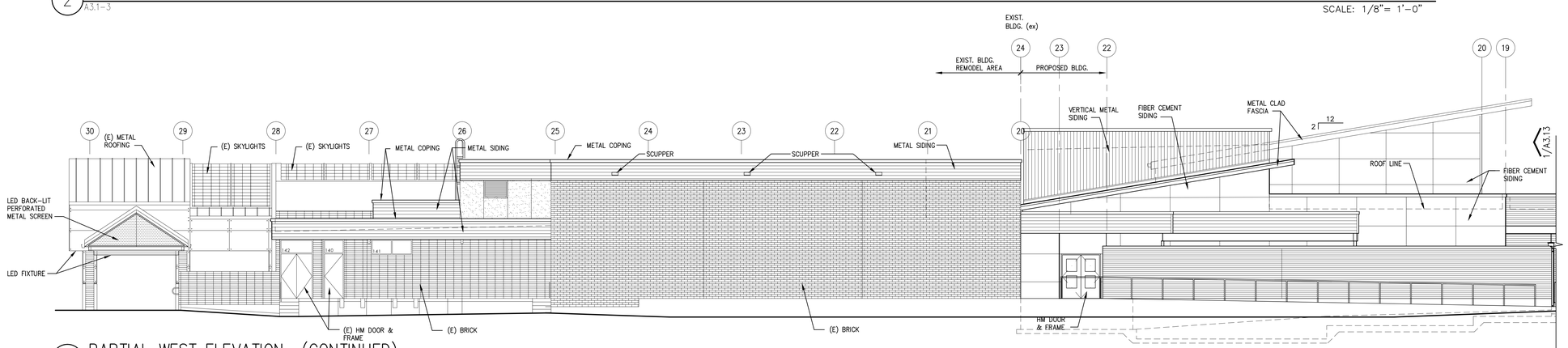

2 PARTIAL WEST ELEVATION (CONTINUED)
A3.1-3

SCALE: 1/8"= 1'-0"

MATERIAL SCHEDULE

MASONRY COLORS

BRICK:	STANDARD BRICK

MISCELLANEOUS

MTL CONNECTORS & EXPOSED STEEL:	SHERWIN WILLIAMS SW7075 "WEB GRAY"
ALUM SUNSHADE:	CLEAR ANODIZED
ALUM. WINDOWS/STOREFRONT:	CLEAR ANODIZED
FIBERGLASS WINDOWS	LIGHT GRAY
METAL LOUVERS:	RUSKIN STONE GRAY (78)

METAL SIDING & ROOFING

VERTICAL MTL SIDING:	AEP SPAN COOL ZACTIQUE II
HORIZONTAL MTL SIDING:	AEP SPAN COOL PARCHMENT
METAL COPING:	AEP SPAN COOL ZACTIQUE II
METAL ROOFING:	AEP SPAN COOL ZACTIQUE II

FIBER CEMENT SIDING

FIBER CEMENT SIDING:	SHERWIN WILLIAMS SW6151 "QUIVER TAN"

PAINT COLORS

STEEL COLS., BEAMS & CONNECTORS:	SHERWIN WILLIAMS SW7075 "WEB GRAY"
MTL GUTTERS & FASCIA:	AEP SPAN COOL ZACTIQUE II
HM DOORS & FRAMES:	SHERWIN WILLIAMS SW7075 "WEB GRAY"
FIBER CEMENT SOFFITS & TRIM:	SHERWIN WILLIAMS SW7075 "WEB GRAY"
CEDAR SOFFIT:	CLEAR SEALER – (2) COATS MIN.

POWDER COAT COLORS

GUARDRAILS, STAIR PANELS & HANDRAILS, FENCING:	CARDINAL INDUSTRIAL FINISHES T064-GR660

NOTES

1. SACK ALL EXTERIOR CONCRETE WALLS & BASES.
2. AT HORIZONTAL & VERTICAL METAL SIDING CORNER TRIM & VERTICAL HORIZONTAL TRIM IS SAME COLOR AS SIDING. SEE 7/A10.1.
3. STEEL GUARDRAIL SEE DETAILS 12&13/A10.1.
4. METAL LOUVERS SEE LOUVER TYPES A6.2.
5. WINDOWS & STOREFRONT SEE WINDOW & STOREFRONT TYPES A6.2.
6. METAL SIDING & TRIM SEE DETAILS 9/A6.7 & 7/A10.1.
7. FIBER CEMENT SIDING SEE DETAIL 1/A10.3.
8. CMU VENEER EXPANSION JOINT SEE A2.9 WALL TYPES.
9. BEARING CMU EXPANSION JOINT SEE A2.9 WALL TYPES.

Cornerstone
ARCHITECTURAL GROUP
6161 NE 175th Street, Suite 101
Kenmore, Washington 98028
Phone: 206.682.5000
cornerstonearch.com

© Cornerstone Architectural Group

3054 REGISTERED ARCHITECT
STEVEN A. BARNES
STATE OF WASHINGTON

CLARK ELEMENTARY SCHOOL
ISSAQUAH SCHOOL DISTRICT
400 1st AVE. SE
ISSAQUAH, WASHINGTON 98027

PERMIT SET
SHEET TITLE: EXTERIOR ELEVATIONS

DATE: 4-15-16
REVISIONS:

PROJECT NO: 191406

A3.12

PLOT DATE: 04/18/16 10:14 DRAWING NAME: K:\EDUCATIONAL\Issaquah\Clark Elem & Gibson EK HS\Drawings Clark Elem\A3 Elevations\A3.11-14-100.dwg

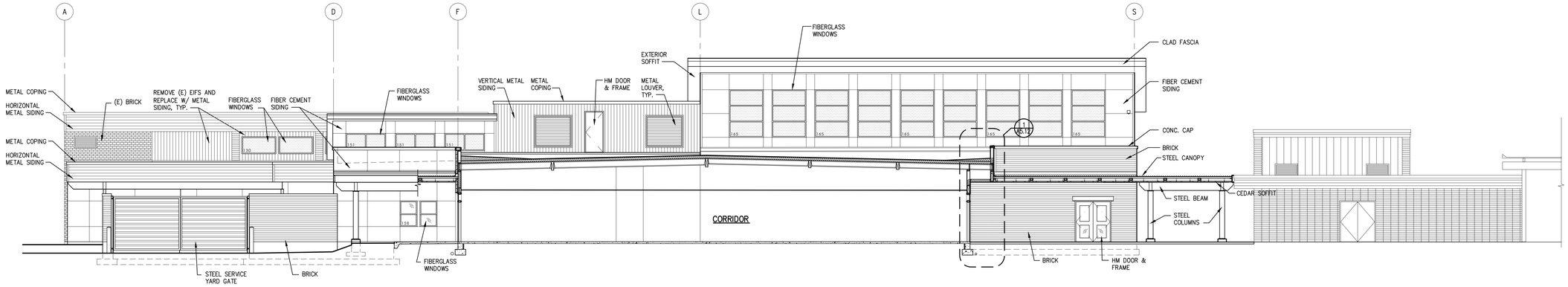

1 PARTIAL SOUTH ELEVATION / SECTION
A3.1-3

SCALE: 1/8"= 1'-0"

NOTE:
SEE A3.11 FOR MATERIAL COLOR SCHEDULE

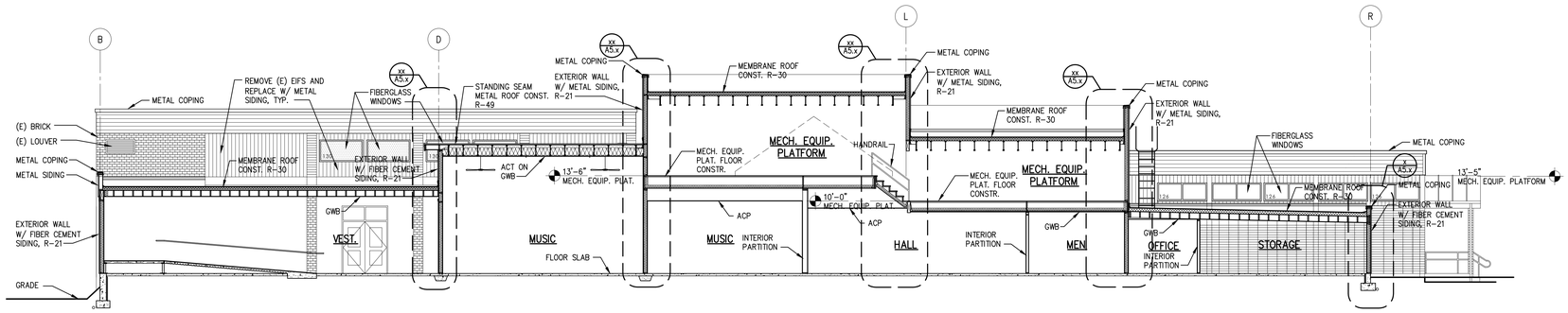

2 PARTIAL SOUTH ELEVATION / SECTION
A3.1-3

SCALE: 1/8"= 1'-0"

3 PARTIAL NORTH ELEVATION AT SERVICE YARD (INTERIOR)
A3.1-3

SCALE: 1/8"= 1'-0"

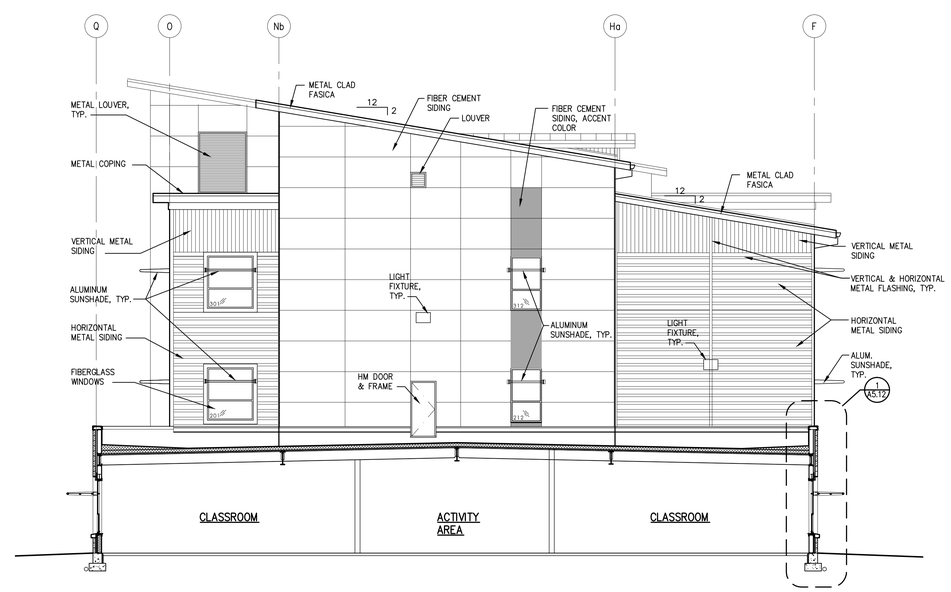

4 PARTIAL ELEVATION / SECTION
A3.1-3

SCALE: 1/8"= 1'-0"

Cornerstone
ARCHITECTURAL GROUP
6161 NE 175th Street, Suite 101
Kenmore, Washington 98028
Phone: 206.682.5000
cornerstonearch.com

© Cornerstone Architectural Group

3954 REGISTERED ARCHITECT
STEVEN A. BARNES
STATE OF WASHINGTON

CLARK ELEMENTARY SCHOOL
ISSAQUAH SCHOOL DISTRICT
400 1st AVE. SE
ISSAQUAH, WASHINGTON 98027

PERMIT SET
SHEET TITLE: EXTERIOR ELEVATIONS

DATE: 4-15-16
REVISIONS:

PROJECT NO: 191406

A3.13

PLOT DATE: 04/18/16 10:14 DRAWING NAME: K:\EDUCATIONAL\Issaquah\Clark Elem & Gibson EK HS\Drawings Clark Elem\A3 Elevations\A3.11-14-100.dwg

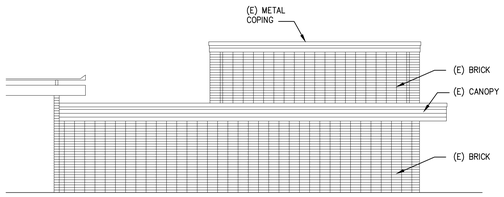

1 NORTH ELEVATION (BLDG. 400)
A3.1-3
SCALE: 1/8"= 1'-0"

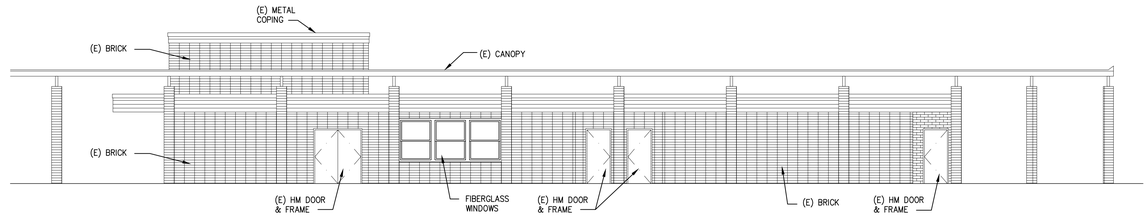

2 EAST ELEVATION (BLDG. 400)
A3.1-3
SCALE: 1/8"= 1'-0"

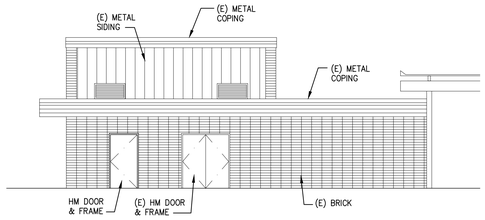

3 SOUTH ELEVATION (BLDG. 400)
A3.1-3
SCALE: 1/8"= 1'-0"

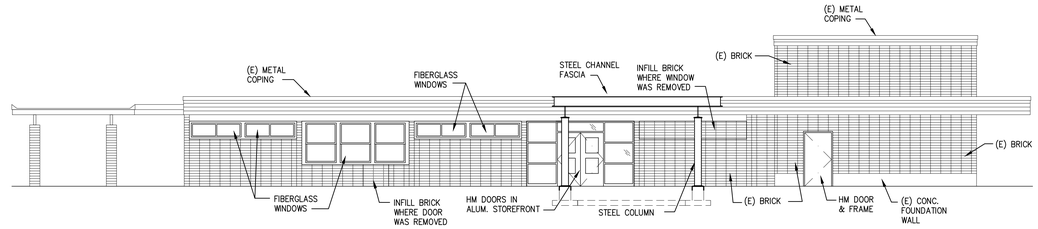

4 WEST ELEVATION (BLDG. 400)
A3.1-3
SCALE: 1/8"= 1'-0"

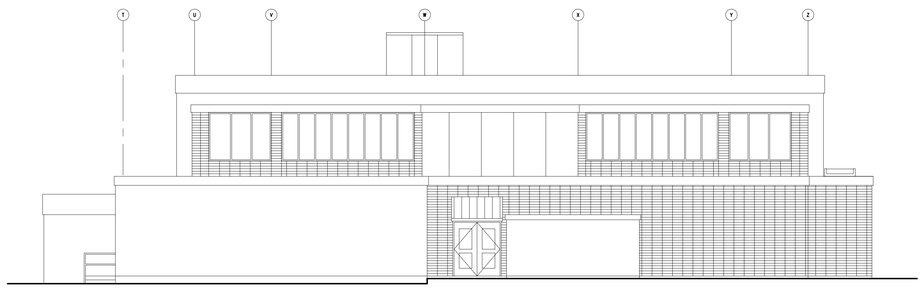

5 SOUTH ELEVATION (BLDG. 300)
A3.1-3
SCALE: 1/8"= 1'-0"

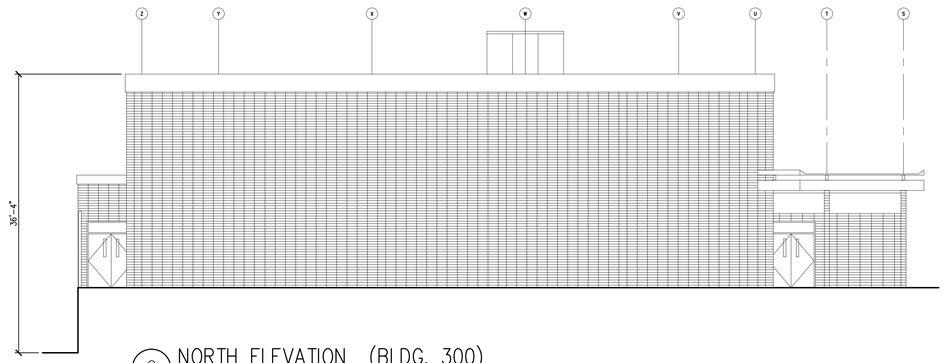

6 NORTH ELEVATION (BLDG. 300)
A3.1-3
SCALE: 1/8"= 1'-0"

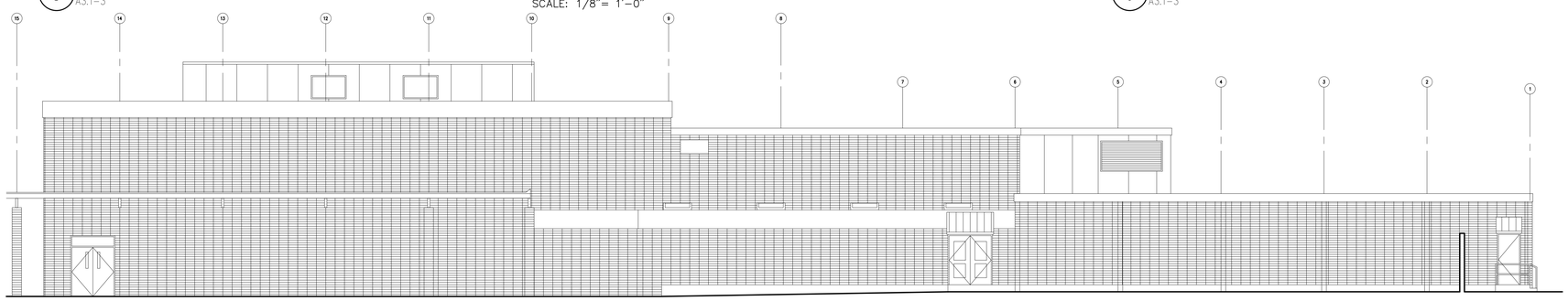

7 WEST ELEVATION (BLDG. 300)
A3.1-3
SCALE: 1/8"= 1'-0"

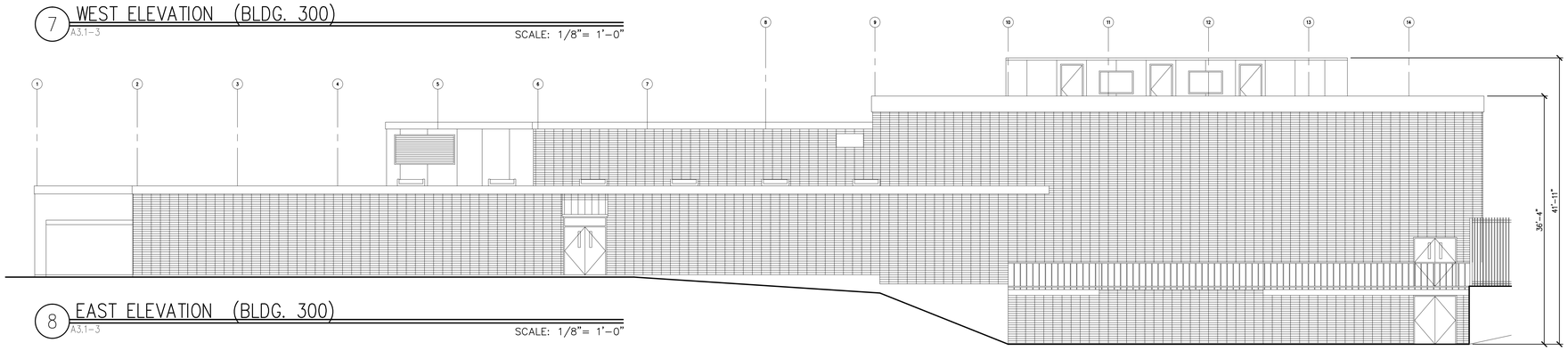

8 EAST ELEVATION (BLDG. 300)
A3.1-3
SCALE: 1/8"= 1'-0"

Cornerstone
ARCHITECTURAL GROUP
6161 NE 175th Street, Suite 101
Kenmore, Washington 98028
Phone: 206.682.5000
cornerstonearch.com

© Cornerstone Architectural Group

3054 REGISTERED ARCHITECT
STEVEN A. BARNES
STATE OF WASHINGTON

CLARK ELEMENTARY SCHOOL
ISSAQUAH SCHOOL DISTRICT
400 1st AVE. SE
ISSAQUAH, WASHINGTON 98027

PERMIT SET
SHEET TITLE: EXTERIOR ELEVATIONS

DATE: 4-15-16
PROJECT NO: 191406
REVISIONS:

A3.14

PLOT DATE: 04/18/16 10:14 DRAWING NAME: K:\EDUCATIONAL\Issaquah\Clark Elem & Gibson EK HS\Drawings Clark Elem\A3 Elevations\A3.11-14-100.dwg