CITY OF ISSAQUAH

NW DOGWOOD ST BRIDGE REPLACEMENT

WSDOT Local Agency Agreement LA-7984
WSDOT Project No. BRM-1408(002)
Federal Aid No. BRM-1408(002)
City of Issaquah Project T01906

APRIL 2014

CITY OFFICIALS

MAYOR
FRED BUTLER

PUBLIC WORKS ENGINEERING DIRECTOR
SHELDON LYNNE, P.E.

CITY COUNCIL MEMBERS
EILEEN BARBER
STACY GOODMAN
TOLA MARTS
NINA MILLIGAN
MARY LOU PAULY
JOSHUA SCHAER
PAUL WINTERSTEIN

Schedule of Drawings

SHEET	DESCRIPTION
1	COVER SHEET
2	GENERAL NOTES & LEGEND
3	SURVEY CONTROL PLAN
4	ROADWAY TYPICAL SECTION
5	TEMPORARY EROSION CONTROL PLAN
6	SITE PREPARATION PLAN
7	ROADWAY PLAN
8	ROADWAY PROFILE
9	DRAINAGE PLAN
10	UTILITIES PLAN
11	GRADING PLAN
12	WALL PROFILES
13	STRIPING & SIGNING PLAN
14	ILLUMINATION PLAN
15	LANDSCAPE PLAN
16	MITIGATION SITE PLAN
17	PLANTING PLAN
18	PLANTING SPECIFICATIONS
19	MONITORING PLAN
20	BRIDGE PLAN AND ELEVATION
21	GENERAL NOTES
22	EXISTING BRIDGE REMOVAL CONCEPT
23	CONSTRUCTION SEQUENCE
24	FOUNDATION PLAN
25	FOUNDATION DETAILS
26	PIER 1 PLAN AND ELEVATION
27	PIER 2 PLAN AND ELEVATION
28	PIER 1 AND 2 DETAILS
29	WINGWALL DETAILS
30	FRAMING PLAN
31	TYPICAL SECTION
32–33	GIRDER DETAILS
34	GIRDER SCHEDULE
35	END DIAPHRAGM DETAILS
36	INTERMEDIATE DIAPHRAGM DETAILS
37	UTILITY HANGER DETAILS
38–39	ISSAQUAH CONCRETE BRIDGE RAILING DETAILS
40–41	PEDESTRIAN RAILING DETAILS
42–43	APPROACH SLAB DETAILS
44	BARLIST
45	TRAFFIC CONTROL PLAN
46	PEDESTRIAN DETOUR PLAN
47–48	CROSS SECTIONS
49–68	STANDARD DETAILS

Vicinity Map

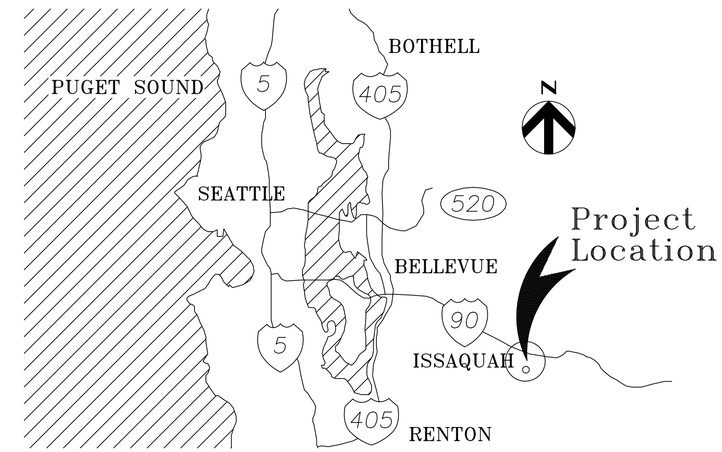

95% SUBMITTAL

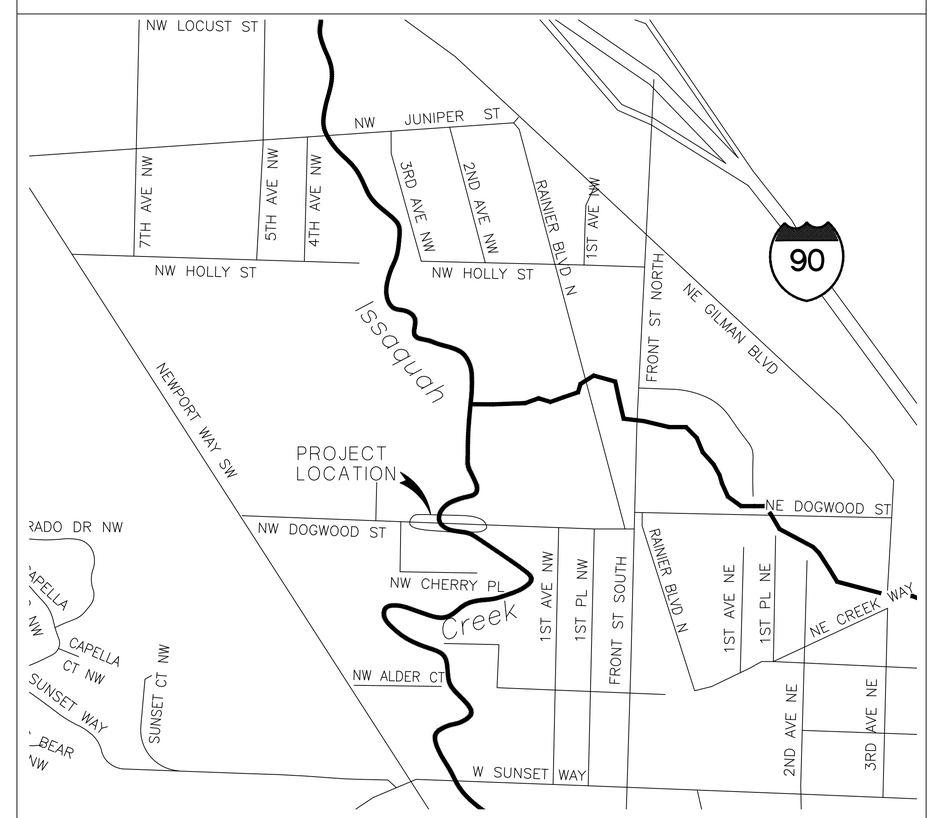

DAVID EVANS AND ASSOCIATES INC.
415 - 118th Avenue SE
Bellevue Washington 98005-3518
Phone: 425.519.6500

NO.	DATE	DESCRIPTION	BY

DOGWOOD ST. BRIDGE REPLACEMENT

DRAWN OXA | DSGN. KXLA | CHKD. MLF

CITY OF ISSAQUAH

KAYLA MARIE PRUTTER — STATE OF WASHINGTON — 50489 — REGISTERED PROFESSIONAL ENGINEER

COVER SHEET

DATE: APRIL 2014 | JOB # BRM-1408(002) | SCALE: AS NOTED

SHEET 1 OF 68

oxa 04/21/14 5:45pm – \\bivfs1\project\V\ISSY00000002\0400CAD\TT\SHEETS\TTCV001ISSY002.dwg

GENERAL NOTES

1. ALL MATERIAL AND WORKMANSHIP SHALL BE IN ACCORDANCE WITH THE REQUIREMENTS OF THE WASHINGTON STATE DEPARTMENT OF TRANSPORTATION, (W.S.D.O.T.) STANDARD SPECIFICATIONS FOR ROAD, BRIDGE AND MUNICIPAL CONSTRUCTION DATED 2014, AMENDMENTS & SPECIAL PROVISIONS.

2. ALL STEEL IN UTILITY SUPPORTS INCLUDING FASTENINGS AND ANCHORAGES, SHALL BE GALVANIZED IN ACCORDANCE WITH AASHTO M-111 (ASTM A-123 OR A-153 RESPECTIVELY) EXCEPT AS NOTED.

LEGEND

EXISTING

- CONTROL POINT (AS NOTED)
- IRON PIPE (FOUND AS NOTED)
- REBAR (FOUND AS NOTED)
- BRASS CAP/SURFACE MON. (FOUND AS NOTED)
- MONUMENT (FOUND AS NOTED)
- MONUMENT IN CASE (FOUND AS NOTED)
- TAX LOT / PARCEL NUMBER
- WHEEL CHAIR RAMP
- SIGN
- ORDINARY HIGH WATER MARK
- FLAG POLE OR WETLAND FLAG
- WETLAND DATA PLOT
- POST OR BOLLARD
- MAILBOX
- DECIDUOUS TREE
- CONIFEROUS TREE
- BUSH
- STUMP
- BOULDER
- WATER MANHOLE
- WATER VAULT
- WV WATER VALVE
- WM WATER METER
- FIRE HYDRANT
- SEWER MANHOLE
- SEWER CLEANOUT
- STORM DRAIN MANHOLE
- STORM CATCH BASIN
- STORM CULVERT
- ELECTRIC MANHOLE
- E ELECTRIC VAULT
- ELECTRIC POLE
- ELECTRIC POLE/STREET LIGHT
- GUY ANCHOR
- GUY POLE
- TELEPHONE MANHOLE
- T TELEPHONE VAULT
- TELEPHONE PULLBOX
- TR TELEPHONE RISER
- TELEPHONE CABINET
- TELEPHONE POLE
- GAS MANHOLE
- G GAS VAULT
- GV GAS VALVE
- GM GAS METER

EXISTING

- DITCH LINE
- EDGE OF GRAVEL OR DIRT
- EDGE OF PAVEMENT
- X X X X FENCE LINE (TYPE AS NOTED)
- GUARD RAIL
- TRAFFIC STRIPING
- TREE/VEGETATION LINE
- ROCKERY
- CREEK ORDINARY HIGH WATER MARK
- WET WET WETLAND BOUNDARY
- EASEMENT LINE
- EXISTING RIGHT-OF-WAY LINE
- PROPERTY LINE
- ROAD CENTERLINE
- TV TV TV CABLE TV UNDER GROUND LINE
- G G G GAS UNDERGROUND LINE
- OH OH OH OVERHEAD UTILITY LINE
- P P P POWER UNDERGROUND LINE
- OP OP OP POWER OVERHEAD LINE
- SS SS SS SANITARY SEWER LINE
- SD SD SD STORM DRAIN LINE
- T T T TELEPHONE UNDERGROUND LINE
- OT OT OT TELEPHONE OVERHEAD LINE
- UT UT UT UNKNOWN UTILITY LINE
- W W W WATER LINE

DAVID EVANS AND ASSOCIATES INC.
415 - 118th Avenue SE
Bellevue Washington 98005-3518
Phone: 425.519.6500

95% SUBMITTAL

NO.	DATE	DESCRIPTION	BY

DOGWOOD ST. BRIDGE REPLACEMENT

DRAWN OXA | DSGN. KXLA | CHKD. MLF

CITY OF ISSAQUAH

KAYLA MARIE PLOTTE — STATE OF WASHINGTON — 50489 — REGISTERED PROFESSIONAL ENGINEER

GENERAL NOTES & LEGEND

DATE: APRIL 2014 | JOB # BRM-1408(002) | SCALE: AS NOTED

oxa 04/21/14 5:45pm – \\blvfs1\project\V1SSY00000002\0400CAD\TT\SHEETS\TTGN001ISSY002.dwg

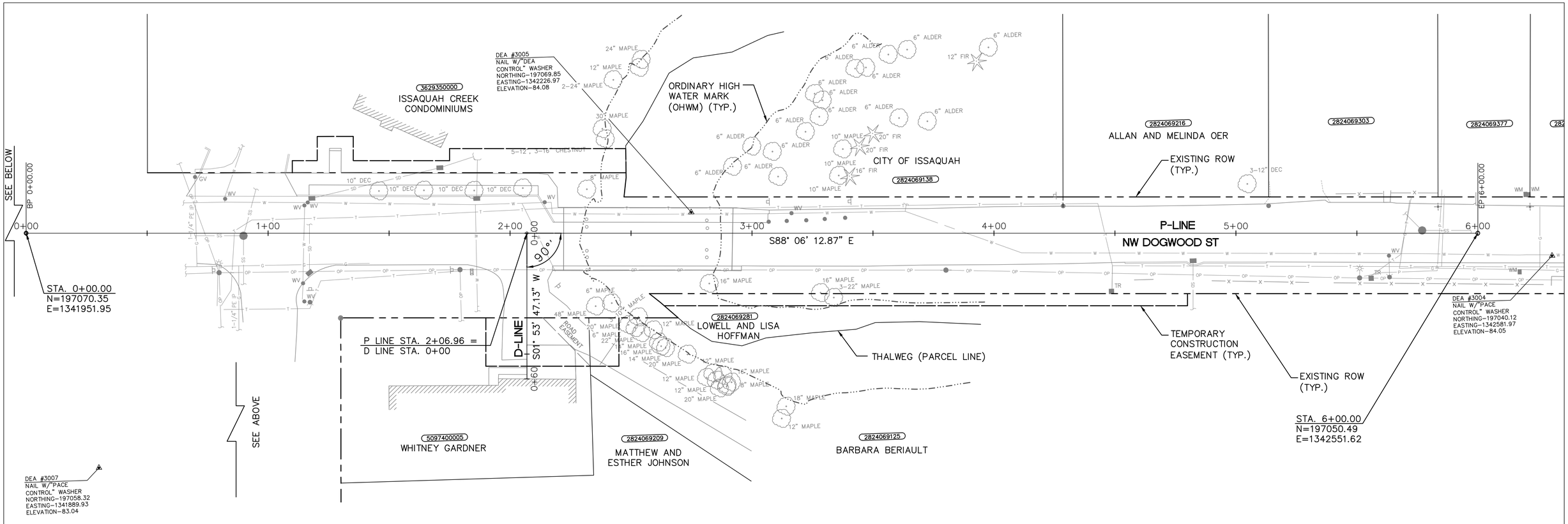

SURVEY NOTES

1. PURPOSE OF THIS SURVEY THIS SURVEY WAS PERFORMED DURING JUNE, 2013 IN SUPPORT OF A CITY OF ISSAQUAH BRIDGE REPLACEMENT PROJECT AND IS INTENDED TO BE USED FOR THIS PURPOSE. SPECIFIC INFORMATION SHOWN HEREON SHOULD BE VERIFIED AS TO ITS ACCURACY IF THIS SURVEY IS TO BE USED FOR PURPOSES OTHER THAT WHAT IT WAS INTENDED FOR.

2 BASIS OF BEARING WASHINGTON COORDINATE SYSTEM, NORTH ZONE, NAD83-2007 COORDINATES.

3. VERTICAL DATUM NAVD-88

4. BENCHMARKS POINT DESIGNATION KC D-18, A 3" BRASS DISC ON THE CORNER OF A CONCRETE PLANTER AT THE INTERSECTION OF RAINIER BLVD AND FRONT ST N.

ELEV = 96.688 FEET (NAVD 88)

5. METHODOLOGY FIELD MEASUREMENT FOR THIS SURVEY WERE PERFORMED USING A LEICA 1201 TOTAL STATION AND LEICA ATX 1230GG GPS RECEIVERS. THIS SURVEY COMPLIES WITH THE MINIMUM REQUIRED "ERROR OF CLOSURE" OF 1:10,000 FOR WASHINGTON STATE PLANE COORDINATES AS SET FORTH PER W.A.C. 332-130-090 (AND POSITIONAL TOLERANCE LEVELS OF LESS THAN 0.011 METERS)

6. PROPERTY LINES PROPERTY LINES SHOWN HEREON ARE BASED ON READILY AVAILABLE PLATS/SURVEYS/RIGHT OF WAY PLANS AND COUNTY ASSESSOR INFORMATION.

PROPERTY CORNERS WERE NOT STAKED IN CONJUNCTION WITH THIS SURVEY.

7. MONUMENTATION VISITATION ALL SURVEY MONUMENTS AND OTHER SURVEY MARKERS SHOWN HEREON WERE VISITED DURING JUNE, 2013 UNLESS OTHERWISE INDICATED.

8. ENCUMBRANCES THIS SURVEY WAS PERFORMED WITHOUT THE BENEFIT OF A TITLE REPORT, ACCORDINGLY, ANY EASEMENTS OR RESTRICTIONS OF RECORD WHICH MAY BE REVEALED IN A TITLE REPORT HAVE NOT BEEN INCLUDED HEREON.

9. UNDERGROUND UTILITIES SHOWN WERE PROVIDED BY THE CLIENT. NO GUARANTEE IS MADE THAT THE UNDERGROUND UTILITIES SHOWN COMPRISE ALL SUCH UTILITIES IN THE AREA, EITHER IN SERVICE OR ABANDONED OR THAT THE UNDERGROUND UTILITIES ARE SHOWN IN THEIR EXACT LOCATION. THE UTILITIES ARE SHOWN AS ACCURATELY AS POSSIBLE FROM AVAILABLE INFORMATION.

10. CONTOUR INTERVAL 1 FEET

12. SUBSURFACE CONDITIONS WERE NOT EXAMINED OR CONSIDERED AS PART OF THIS SURVEY.

13. SENSITIVE AREAS WERE NOT EXAMINED OR CONSIDERED AS PART OF THIS SURVEY.

14 1-800-424-5555 MUST BE CALLED NOT LESS THAN 48 HOURS BEFORE BEGINNING EXCAVATION WHERE ANY UNDERGROUND UTILITIES MAY BE LOCATED. FAILURE TO DO SO COULD MEAN BEARING SUBSTANTIAL REPAIR COSTS. (UP TO THREE TIMES THE COST OF REPAIRS TO THE SERVICE).

GRAPHIC SCALE

20 0 20 40

(IN FEET)

95% SUBMITTAL

DAVID EVANS AND ASSOCIATES INC.
415 - 118th Avenue SE
Bellevue Washington 98005-3518
Phone: 425.519.6500

NO.	DATE	DESCRIPTION	BY

DOGWOOD ST. BRIDGE REPLACEMENT

DRAWN OXA | DSGN. KXLA | CHKD. MLF

CITY OF ISSAQUAH

KAYLA MARIE PLOUTTE STATE OF WASHINGTON 50489 REGISTERED PROFESSIONAL ENGINEER

SURVEY CONTROL PLAN

DATE: APRIL 2014 | JOB # BRM-1408(002) | SCALE: AS NOTED

SHEET 3 OF 68

oxa 04/21/14 5:45pm - \\bvfs1\project\V\VSSY00000002\04000AD\TT\SHEETS\TTSV001ISSY002.dwg

CONSTRUCTION NOTES

1. 2" HMA CL 1/2" PG 64-22
2. 4" HMA CL 1" PG 64-22
3. 8" CSBC
4. 3" CSBC

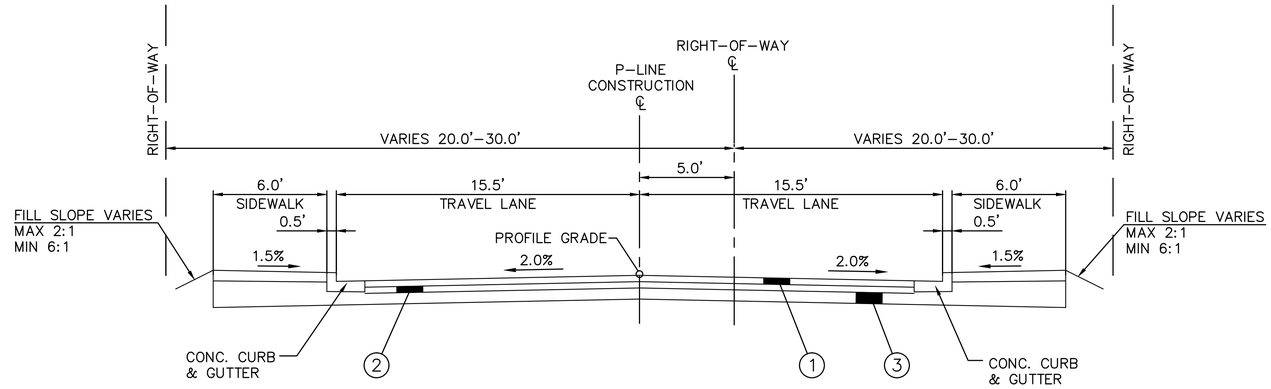

TYPICAL ROAD SECTION

NTS

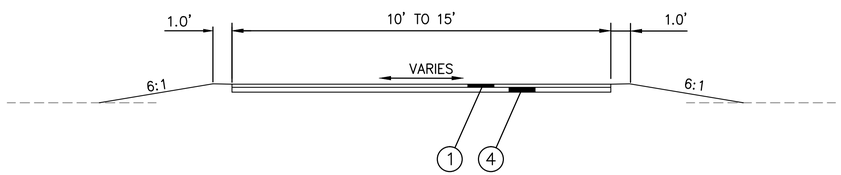

TYPICAL DRIVEWAY SECTION

NTS

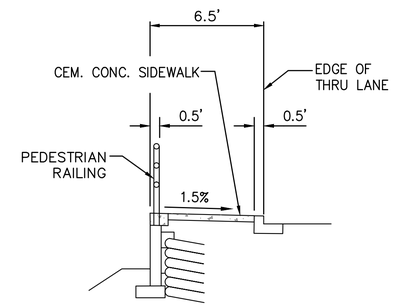

SIDEWALK W/ CONC. GEOSYNTHETIC WALL & HANDRAIL

NTS

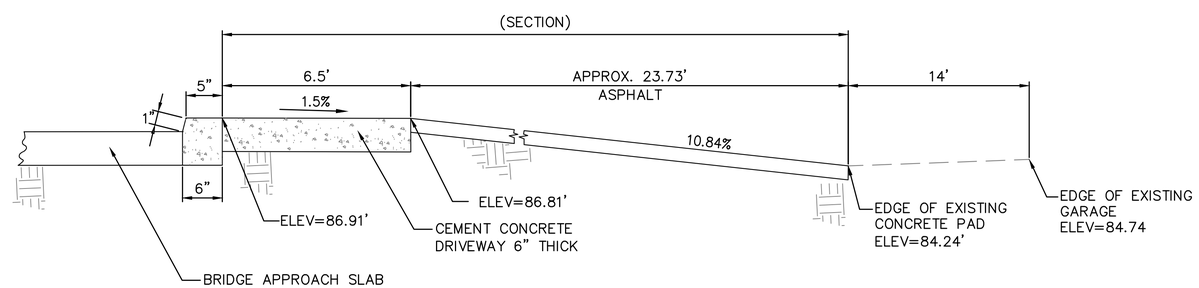

DRIVEWAY SECTION STA. 2+06.96

NTS

DAVID EVANS AND ASSOCIATES INC.
415 - 118th Avenue SE
Bellevue Washington 98005-3518
Phone: 425.519.6500

95% SUBMITTAL

NO.	DATE	DESCRIPTION	BY

DOGWOOD ST. BRIDGE REPLACEMENT

DRAWN OXA | DSGN. KXLA | CHKD. MLF

CITY OF ISSAQUAH

KAYLA MARIE PLOTTE — STATE OF WASHINGTON — 50489 — REGISTERED PROFESSIONAL ENGINEER

ROADWAY TYPICAL SECTION

DATE: APRIL 2014 | JOB # BRM-1408(002) | SCALE: AS NOTED

SHEET 4 OF 68

oxa 04/21/14 5:45pm – \\bivfs1\project\V\ISSY00000002\04000CAD\TT\SHEETS\TTTY001ISSY002.dwg

CONSTRUCTION NOTES

1. INSTALL STORM DRAIN INLET PROTECTION
2. INSTALL HIGH VISIBILITY SILT FENCE

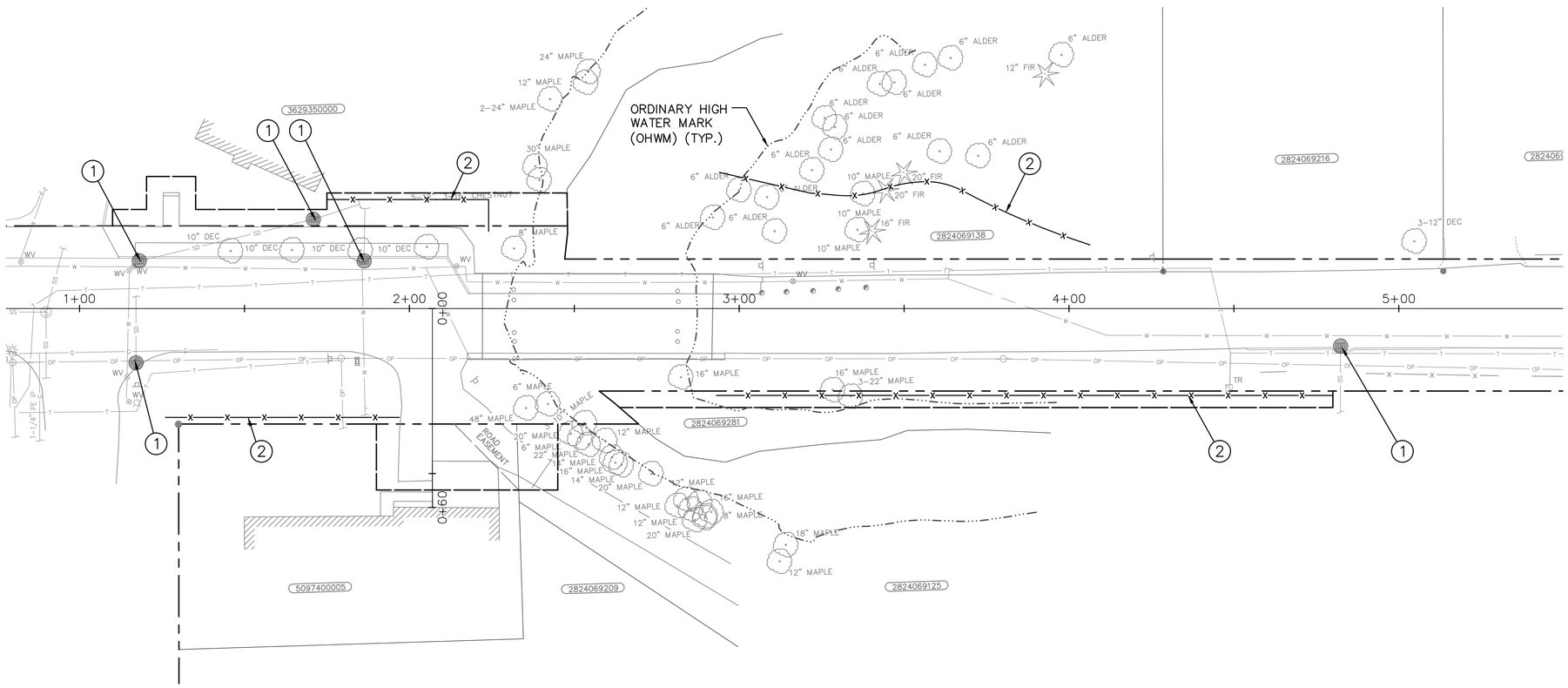

LEGEND

●	STORM DRAIN INLET PROTECTION
—x—x—	HIGH VISIBILITY SILT FENCE

GRAPHIC SCALE

20 0 20 40

(IN FEET)

95% SUBMITTAL

DAVID EVANS AND ASSOCIATES INC.
415 - 118th Avenue SE
Bellevue Washington 98005-3518
Phone: 425.519.6500

NO.	DATE	DESCRIPTION	BY

DOGWOOD ST. BRIDGE REPLACEMENT

DRAWN OXA | DSGN. KXLA | CHKD. MLF

CITY OF ISSAQUAH

KAYLA MARIE PAROTTE — STATE OF WASHINGTON — 50489 — REGISTERED PROFESSIONAL ENGINEER

TEMPORARY EROSION CONTROL PLAN

DATE: APRIL 2014 | JOB # BRM-1408(002) | SCALE: AS NOTED

SHEET 5 OF 68

oxa 04/21/14 5:45pm – \\blvis1\project\\ISSY00000002\0400CAD\TT\SHEETS\TEC001ISSY002.dwg

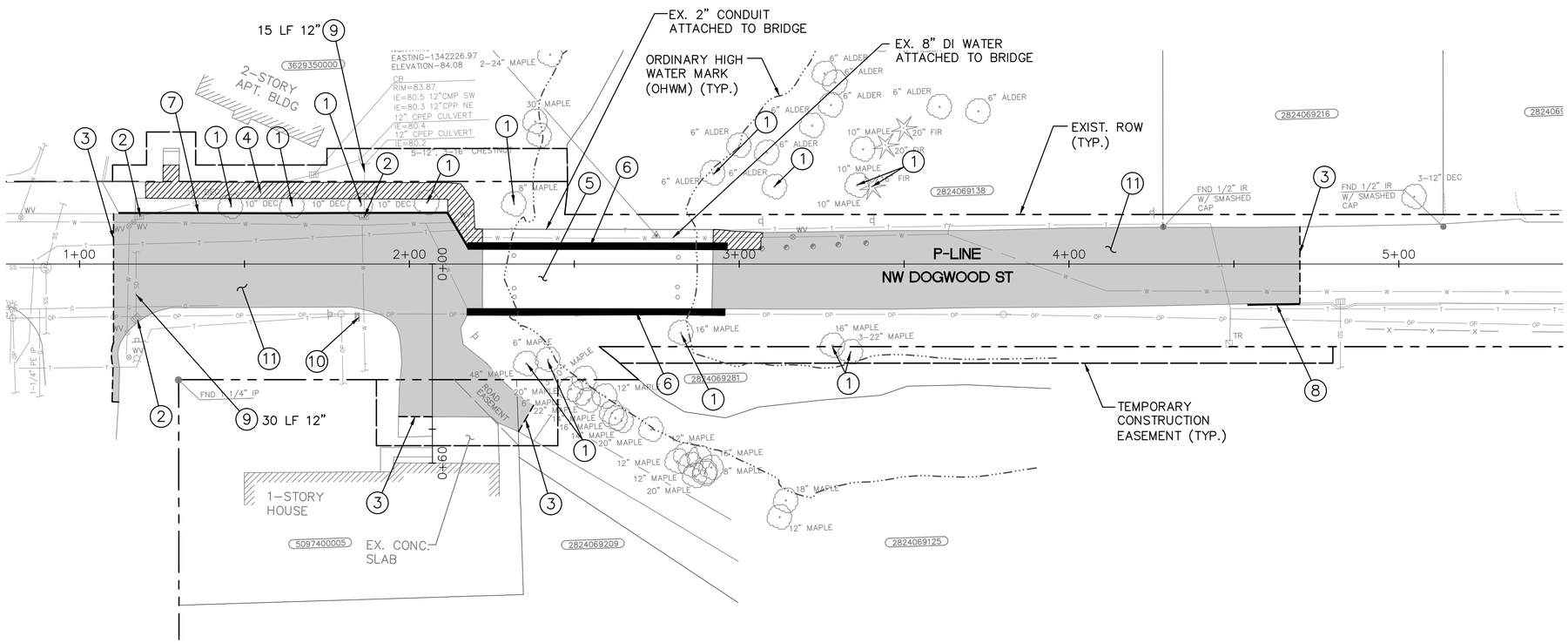

CONSTRUCTION NOTES

1. REMOVE EXISTING TREE
2. REMOVE EXISTING CATCH BASIN
3. SAWCUT EXISTING ASPHALT PAVEMENT
4. REMOVE EXISTING CEMENT CONCRETE SIDEWALK
5. REMOVE EXISTING CONCRETE BRIDGE
6. REMOVE EXISTING CONCRETE TRAFFIC BARRIER
7. REMOVE EXISTING CONCRETE CURB AND GUTTER
8. REMOVE EXISTING EXTRUDED CURB
9. ABANDON EXISTING PIPE IN PLACE
10. REMOVE AND RELOCATE EXISTING MAILBOX
11. REMOVE EXISTING ASPHALT PAVEMENT

LEGEND

- ASPHALT REMOVAL AREA
- CEMENT CONCRETE SIDEWALK REMOVAL AREA
- CONCRETE BARRIER REMOVAL
- CURB REMOVAL
- SAWCUT

GRAPHIC SCALE

20 0 20 40

(IN FEET)

95% SUBMITTAL

DAVID EVANS AND ASSOCIATES INC.
415 - 118th Avenue SE
Bellevue Washington 98005-3518
Phone: 425.519.6500

NO.	DATE	DESCRIPTION	BY

DRAWN OXA | DSGN. KXLA | CHKD. MLF

DOGWOOD ST. BRIDGE REPLACEMENT

CITY OF ISSAQUAH

KAYLA MARIE PAROTTE — STATE OF WASHINGTON — 50459 — REGISTERED PROFESSIONAL ENGINEER

SITE PREPARATION PLAN

DATE: APRIL 2014 | JOB # BRM-1408(002) | SCALE: AS NOTED

SHEET 6 OF 68

oxa 04/21/14 5:45pm – \\bivis1\project1\ISSY00000002\0400CAD\TTS_SHEETS\TTSP001ISSY002.dwg

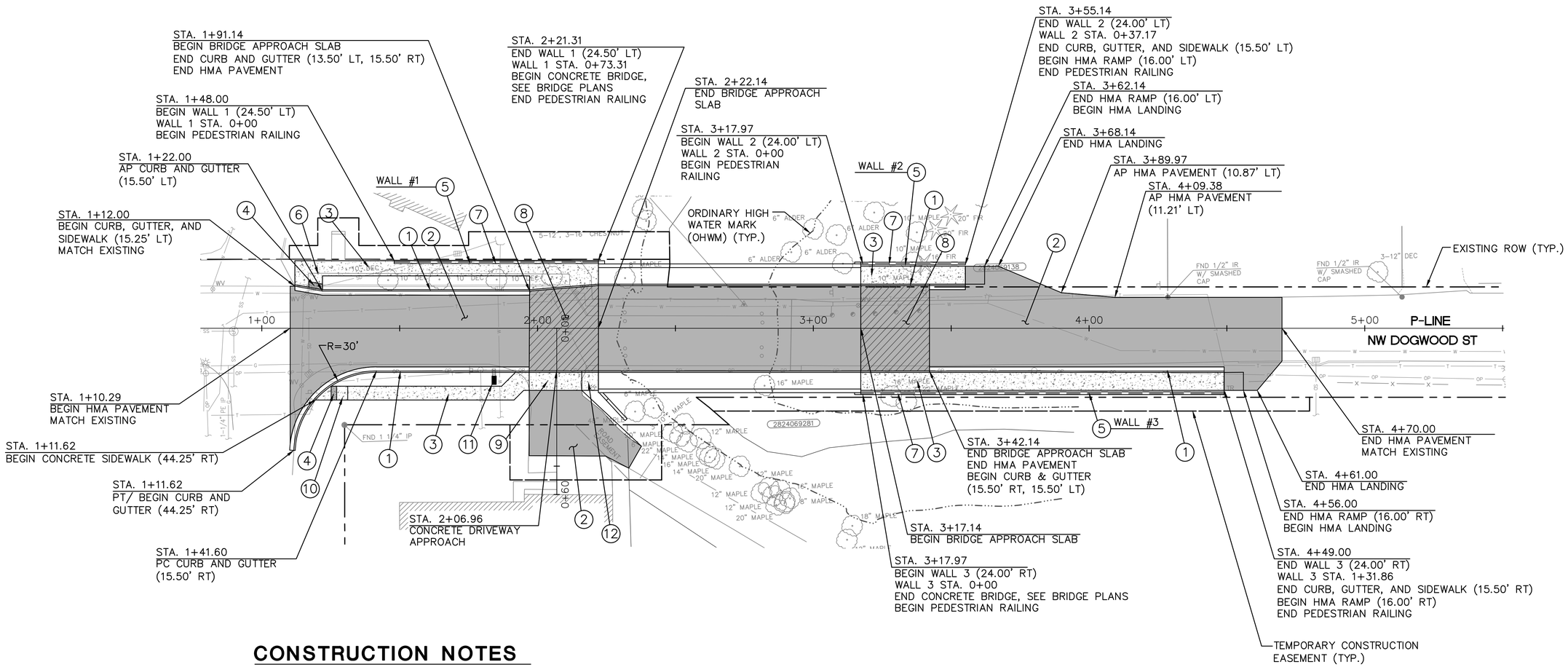

CONSTRUCTION NOTES

1. CONSTRUCT TYPE A CEMENT CONCRETE CURB AND GUTTER PER CITY OF ISSAQUAH STD. DETAIL T–38.
2. CONSTRUCT HMA PAVEMENT.
3. CONSTRUCT CEMENT CONCRETE SIDEWALK PER CITY OF ISSAQUAH STD. DETAIL T–38.
4. INSTALL DETECTABLE WARNING SURFACE PER WSDOT STD. PLAN F–45.10–01.
5. CONSTRUCT RETAINING WALL, SEE SHEET 12 FOR WALL PROFILES.
6. CONSTRUCT CEMENT CONCRETE PARALLEL CURB RAMP PER CITY OF ISSAQUAH STD. DETAIL T–09.
7. INSTALL PEDESTRIAN RAILING, SEE SHEETS 40–41 FOR DETAILS.
8. CONSTRUCT CONCRETE BRIDGE APPROACH SLAB.
9. CONSTRUCT CEMENT CONCRETE RESIDENTIAL DRIVEWAY APPROACH PER CITY OF ISSAQUAH STD. DETAIL T–05.
10. CONSTRUCT CEMENT CONCRETE SINGLE DIRECTIONAL CURB RAMP PER WSDOT STD. PLAN F–40.16–02.
11. INSTALL MAILBOX PER WSDOT STD. PLAN H–70.10–01.
12. TRANSITION CURB FROM 1" DEPTH AT DRIVEWAY TO 6" DEPTH AT CONCRETE WALK.

LEGEND

- HMA PAVEMENT
- CEMENT CONCRETE SIDEWALK
- CEMENT CONCRETE BRIDGE APPROACH SLAB
- RETAINING WALL
- TEMPORARY CONSTRUCTION EASEMENT
- EXISTING RIGHT OF WAY

GENERAL NOTES

1. SEE SHEET 12 FOR WALL PROFILES.
2. SEE SHEET 20 FOR BRIDGE PLAN AND ELEVATION.
3. SEE SHEETS 42–43 FOR BRIDGE APPROACH SLAB DETAILS.

GRAPHIC SCALE
20 0 20 40
(IN FEET)

95% SUBMITTAL

DAVID EVANS AND ASSOCIATES INC.
415 - 118th Avenue SE
Bellevue Washington 98005-3518
Phone: 425.519.6500

NO.	DATE	DESCRIPTION	BY

DRAWN OXA | DSGN. KXLA | CHKD. MLF

DOGWOOD ST. BRIDGE REPLACEMENT

CITY OF ISSAQUAH

KAYLA MARIE PIROTTE, STATE OF WASHINGTON, 50489, REGISTERED PROFESSIONAL ENGINEER

ROADWAY PLAN

DATE: APRIL 2014 | JOB # BRM–1408(002) | SCALE: AS NOTED

SHEET 7 OF 68

oxa 04/21/14 5:46pm – \\blvfs1\project\V\VSSY00000002\0400CAD\TT\SHEETS\TTRD001ISSY002.dwg

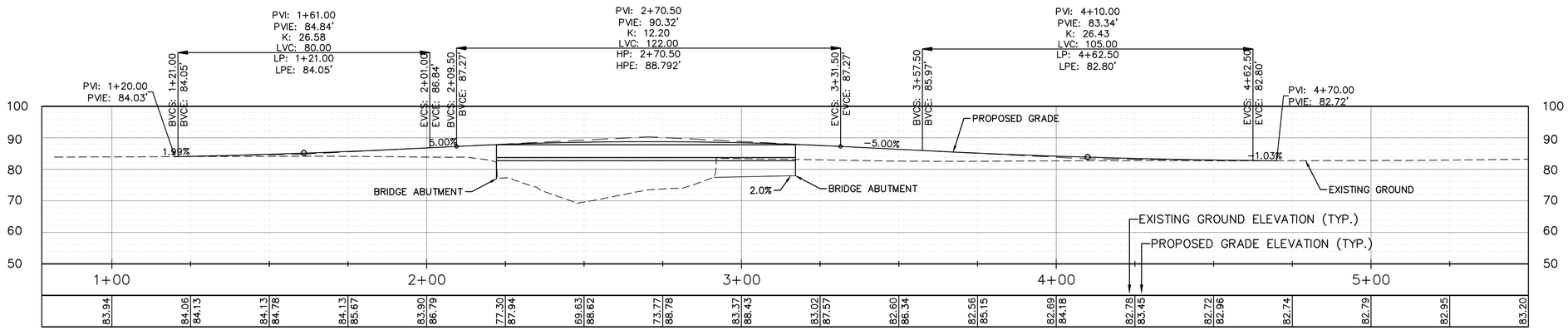

DOGWOOD ST. PROFILE

95% SUBMITTAL

GRAPHIC SCALE

20 0 20 40

(IN FEET)

DAVID EVANS AND ASSOCIATES INC.
415 - 118th Avenue SE
Bellevue Washington 98005-3518
Phone: 425.519.6500

NO.	DATE	DESCRIPTION	BY

DOGWOOD ST. BRIDGE REPLACEMENT

DRAWN OXA | DSGN. KXLA | CHKD. MLF

CITY OF ISSAQUAH

KAYLA MARIE PLOTTE
STATE OF WASHINGTON
50489
REGISTERED PROFESSIONAL ENGINEER

ROADWAY PROFILE

DATE: APRIL 2014 | JOB # BRM-1408(002) | SCALE: AS NOTED

SHEET 8 OF 68

oxa 04/21/14 5:46pm – \\bivfs1\project\V\ISSY00000002\04000CAD\TT\SHEETS\TTPR001ISSY002.dwg

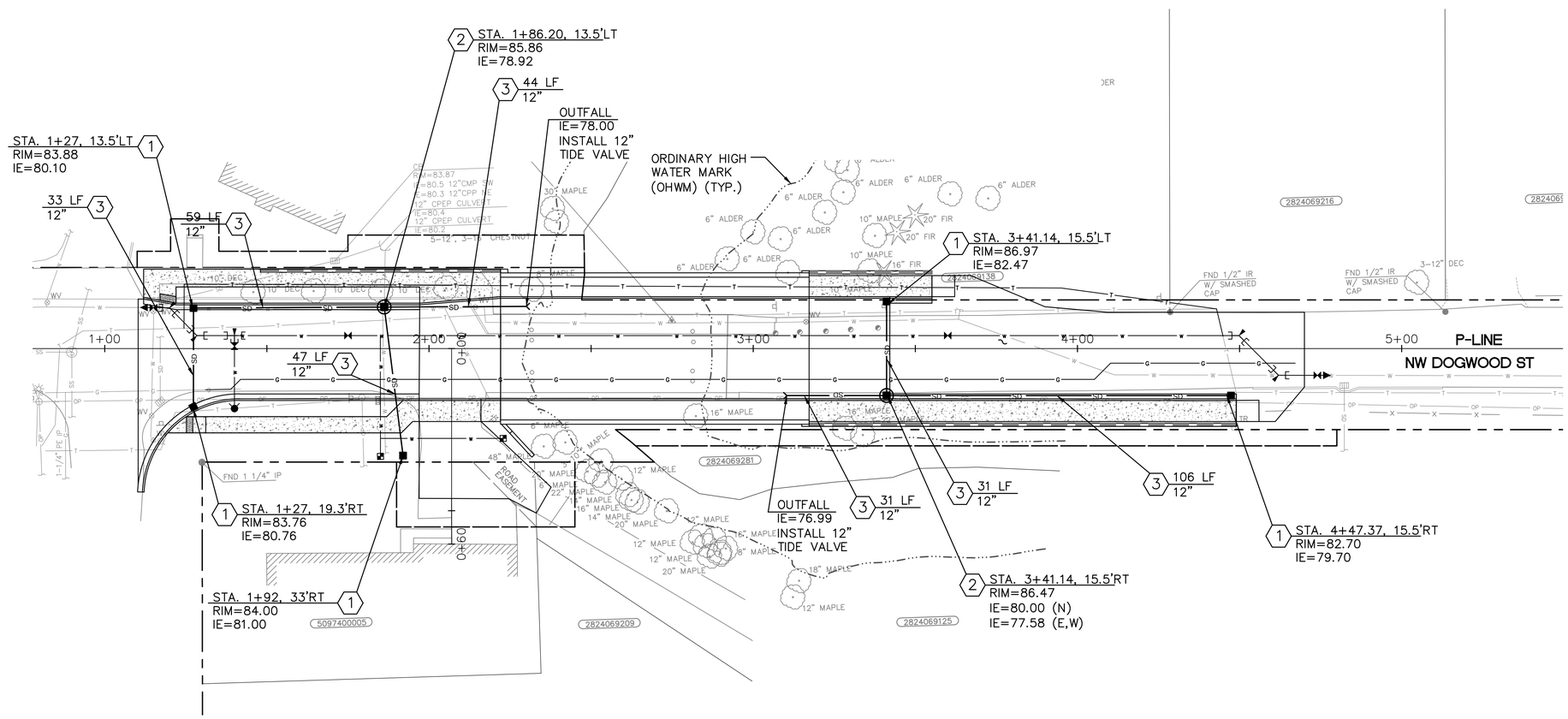

CONSTRUCTION NOTES

1. INSTALL CATCH BASIN TYPE 1 PER WSDOT STD. PLAN B-5.20-01.
2. INSTALL CATCH BASIN TYPE 2, 48" DIAMETER, WITH FLOW RESTRICTOR, PER WSDOT STD. PLAN B-10.40.
3. INSTALL STORM DRAIN PIPE.

LEGEND

- ■ CATCH BASIN TYPE 1
- ◉ CATCH BASIN TYPE 2
- —SD— STORM DRAIN PIPE

GRAPHIC SCALE

20 0 20 40

(IN FEET)

95% SUBMITTAL

DAVID EVANS AND ASSOCIATES INC.
415 - 118th Avenue SE
Bellevue Washington 98005-3518
Phone: 425.519.6500

NO.	DATE	DESCRIPTION	BY

DOGWOOD ST. BRIDGE REPLACEMENT

DRAWN OXA | DSGN. KXLA | CHKD. MLF

CITY OF ISSAQUAH

KAYLA MARIE PIRUTTE — STATE OF WASHINGTON — 50489 — REGISTERED PROFESSIONAL ENGINEER

DRAINAGE PLAN

DATE: APRIL 2014 | JOB # BRM-1408(002) | SCALE: AS NOTED

SHEET 9 OF 68

oxa 04/21/14 5:46pm – \\bivfs1\project\\ISSY00000002\0400CAD\TT\SHEETS\TTDR001ISSY002.dwg

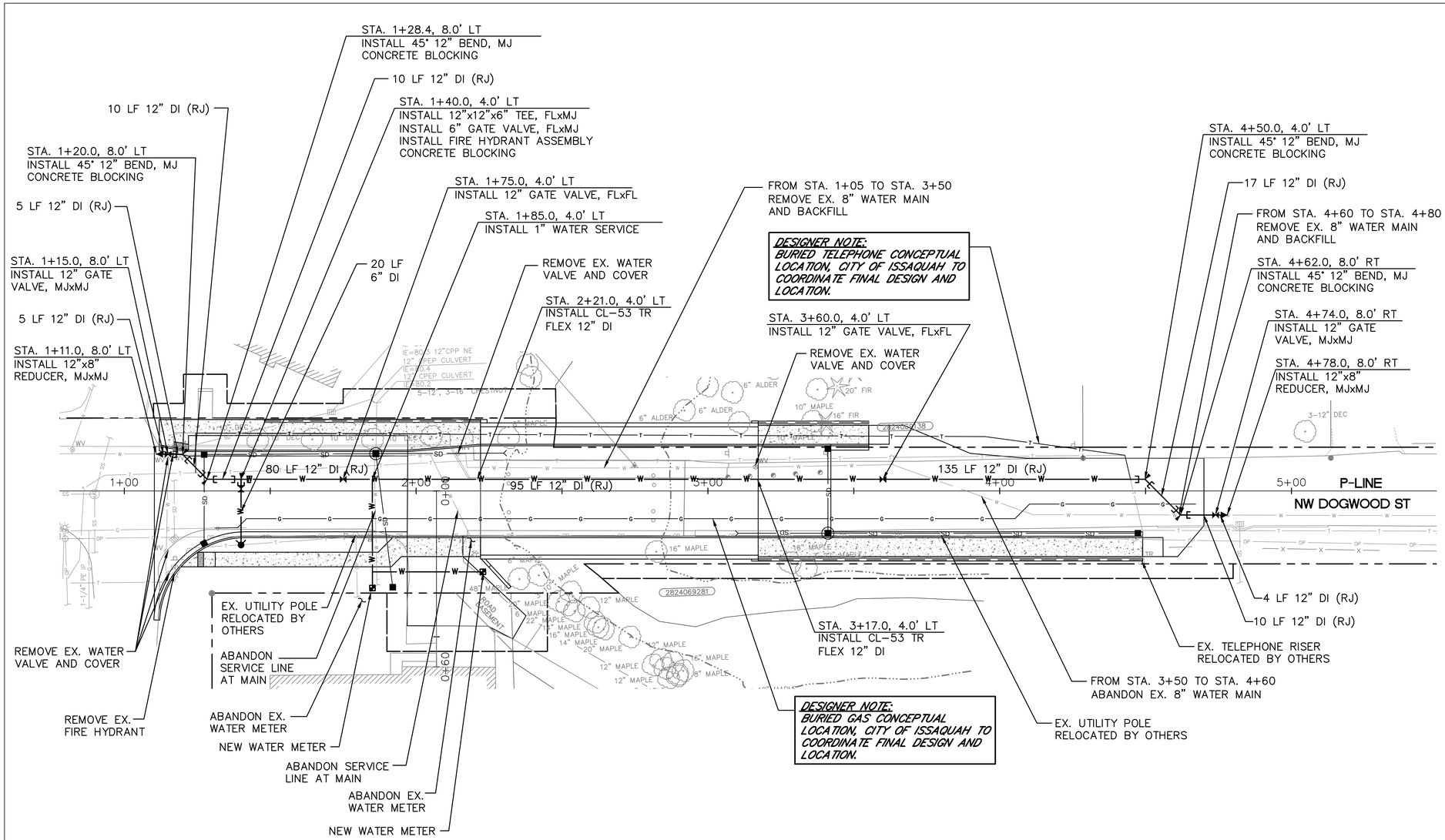

GENERAL NOTES

1. ALL CONSTRUCTION SHALL COMPLY WITH CITY OF ISSAQUAH STANDARDS.
2. EXTRA VERTICAL/HORIZONTAL BENDS, FITTINGS AND CONCRETE BLOCKING MAY BE REQUIRED TO COMPLETE THE CONSTRUCTION OF THE WATER LINE, INCIDENTAL TO THE WATER LINE.
3. CONTRACTOR TO ADJUST FINAL LOCATION OF WATER LINE TO AVOID UTILITY CONFLICTS.
4. INSTALL 1" POLY-URETHANE PIPE WRAP FOR 6" WATER LINE.

LEGEND

- PROPOSED WATERLINE
- PROPOSED GAS
- PROPOSED TELEPHONE
- PROPOSED HYDRANT
- PROPOSED CONCRETE BLOCKING
- PROPOSED REDUCER
- PROPOSED WATER METER
- PROPOSED WATER VALVE
- PROPOSED 45° BEND
- PROPOSED TEE

GRAPHIC SCALE

20 0 20 40

(IN FEET)

95% SUBMITTAL

DAVID EVANS AND ASSOCIATES INC.
415 - 118th Avenue SE
Bellevue Washington 98005-3518
Phone: 425.519.6500

NO.	DATE	DESCRIPTION	BY

DOGWOOD ST. BRIDGE REPLACEMENT

DRAWN OXA | DSGN. KXLA | CHKD. MLF

CITY OF ISSAQUAH

MANUEL L. FELIBERTI — STATE OF WASHINGTON — 36346 — REGISTERED PROFESSIONAL ENGINEER

UTILITIES PLAN

DATE: APRIL 2014 | JOB # BRM-1408(002) | SCALE: AS NOTED

SHEET 10 OF 68

oxa 04/21/14 5:46pm – \\bivs1\project\\ISSY00000002\d400CAD\TT\SHEETS\TTWA001ISSY002.dwg

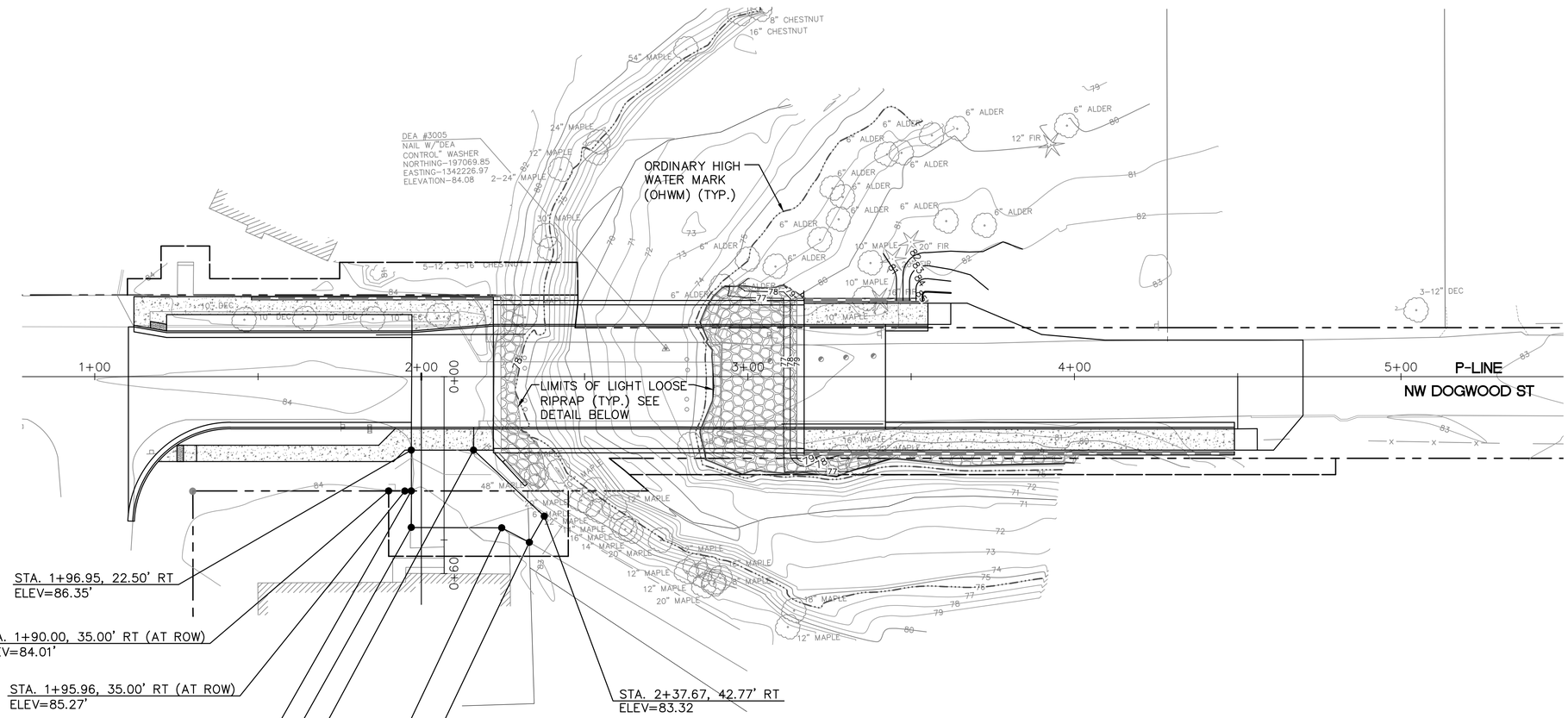

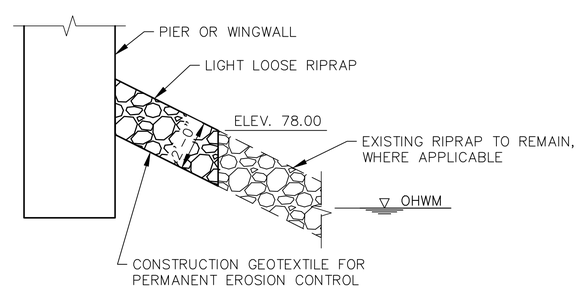

RIPRAP DETAIL

TIE LIGHT LOOSE RIPRAP INTO EXISTING RIPRAP.

LEGEND

79	PROPOSED CONTOUR (MINOR)
80	PROPOSED CONTOUR (MAJOR)

GRAPHIC SCALE

20 0 20 40

(IN FEET)

95% SUBMITTAL

DAVID EVANS AND ASSOCIATES INC.
415 - 118th Avenue SE
Bellevue Washington 98005-3518
Phone: 425.519.6500

NO.	DATE	DESCRIPTION	BY

DOGWOOD ST. BRIDGE REPLACEMENT

CITY OF ISSAQUAH

KAYLA MARIE PIROTTE — STATE OF WASHINGTON — 50483 — REGISTERED PROFESSIONAL ENGINEER

GRADING PLAN

DRAWN OXA | DSGN. KXLA | CHKD. MLF | DATE: APRIL 2014 | JOB # BRM-1408(002) | SCALE: AS NOTED

SHEET 11 OF 68

oxa 04/21/14 5:46pm – \\blvfs1\project\V\VSSY00000002\0400CAD\TT\SHEETS\TTGR001ISSY002.dwg

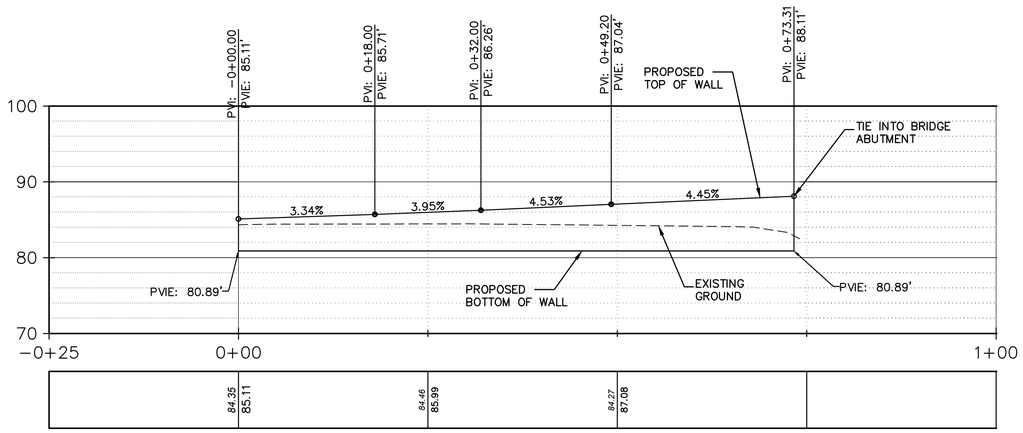

WALL 1 PROFILE

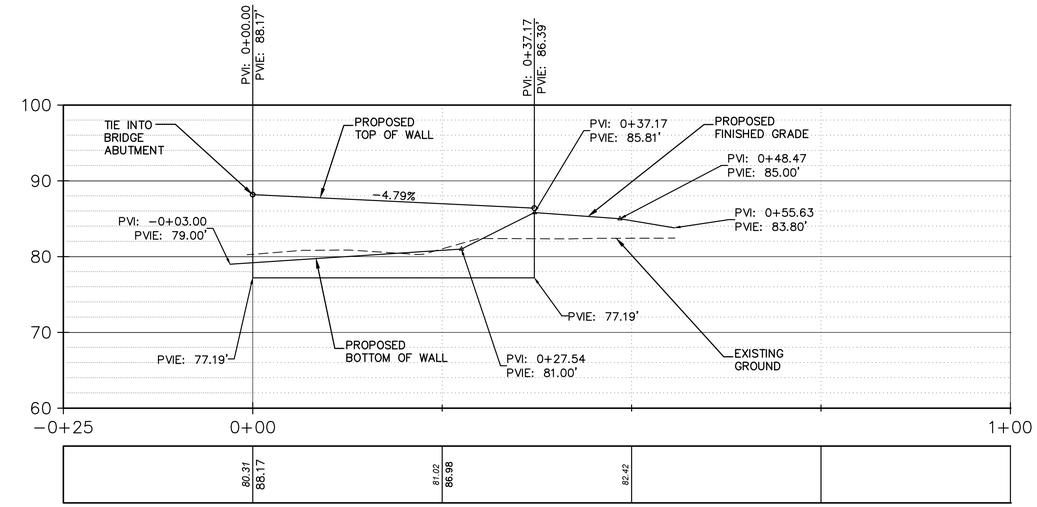

WALL 2 PROFILE

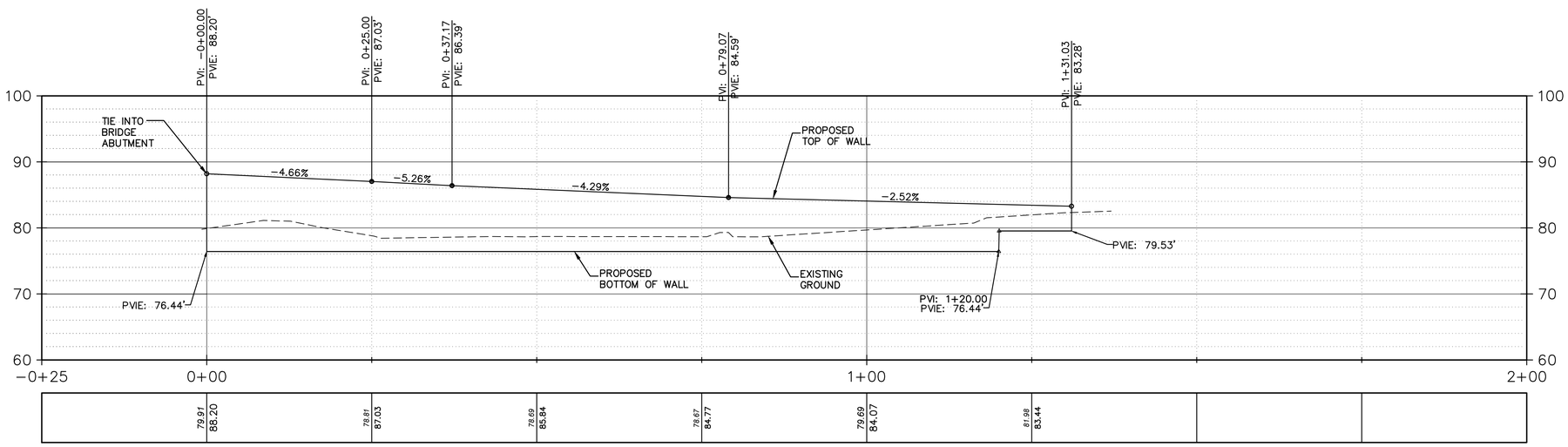

WALL 3 PROFILE

GENERAL NOTES

1. ALL RETAINING WALLS ARE GEOSYNTHETIC WALL IN ACCORDANCE WITH WSDOT STD. PLANS D−3.09 & D−3.10.
2. RETAINING WALLS FASCIA SHALL BE CAST−IN−PLACE WALL FASCIA AND FACING. FACING SHALL BE BLOCK FACED.

95% SUBMITTAL

GRAPHIC SCALE
10 0 10 20
(IN FEET)

DAVID EVANS AND ASSOCIATES INC.
415 - 118th Avenue SE
Bellevue Washington 98005-3518
Phone: 425.519.6500

NO.	DATE	DESCRIPTION	BY

DOGWOOD ST. BRIDGE REPLACEMENT

CITY OF ISSAQUAH

KAYLA MARIE PAROTTE — STATE OF WASHINGTON — 50489 — REGISTERED PROFESSIONAL ENGINEER

WALL PROFILES

DRAWN OXA | DSGN. KXLA | CHKD. MLF | DATE: APRIL 2014 | JOB # BRM−1408(002) | SCALE: AS NOTED

SHEET 12 OF 68

oxo 04/21/14 5:48pm – \\blvfs1\project\V\VSSY00000002\04000AD\TT\SHEETS\TTWL001SSY002.dwg

CONSTRUCTION NOTES

1. YELLOW DOUBLE LINE PER CITY OF ISSAQUAH STD. PLAN T–19
2. WHITE SOLID LINE PER CITY OF ISSAQUAH STD. PLAN T–19
3. RELOCATE EXISTING SIGN AND POST ON NEW STANDARD FOUNDATION PER SIGN INSTALLATION SCHEDULE AND CITY OF ISSAQUAH STD. PLAN T–45

LEGEND

- EXISTING RIGHT OF WAY
- EXISTING SIGN
- PROPOSED SIGN

SIGNING NOTES

1. FOR SIGNS AND SIGN SUPPORT DETAILS, SEE CITY OF ISSAQUAH STANDARD DETAIL T–44 & T–45.
2. SIGN CLEARANCE FROM BOTTOM OF SIGN – 7' ABOVE GROUND (MAXIMUM–7.5' ABOVE GROUND). OFFSETS FROM THE FACE OF CURB ARE NOTED IN SIGN SCHEDULE.
3. EXISTING FOUNDATIONS SHALL BE REMOVED AND BACKFILLED, UNLESS OTHERWISE NOTED.
4. FINAL SIGN LOCATION SHALL BE APPROVED BY THE ENGINEER.

SIGN REMOVAL SCEHDULE

SIGN #	SIGN CODE	SIGN DESCRIPTION	EXISTING SIGN LOCATION				POST MATERIAL	COMMENTS
			STATION		LT/RT	OFFSET		
RS–1	CUSTOM	NARROW BRIDGE SYMBOL/SIGN	P–LINE	0+77.49	RT	15.36'	STEEL	TOTAL SIGNS: 2
RS–2	R1–1	STOP SIGN/STREET NAME	P–LINE	1+17.44	RT	23.07'	STEEL	RELOCATE POST/SIGN TO S–1. TOTAL SIGNS: 3
RS–3	R12–1	WEIGHT LIMIT	P–LINE	1+75.95	RT	15.19'	STEEL	
RS–4	CUSTOM	STREAM CARE/ISSAQUAH CREEK	P–LINE	2+20.03	RT	21.84'	STEEL	RELOCATE POST/SIGN TO S–2. TOTAL SIGNS: 3
RS–5	OM3–R	TYPE 3 OBJECT MARKER	P–LINE	2+17.59	RT	14.46'	STEEL	
RS–6	OM3–L	TYPE 3 OBJECT MARKER	P–LINE	2+20.10	LT	11.29'	STEEL	
RS–7	OM3–R	TYPE 3 OBJECT MARKER	P–LINE	2+92.17	LT	10.47'	STEEL	
RS–8	OM3–L	TYPE 3 OBJECT MARKER	P–LINE	2+91.71	RT	15.47'	STEEL	
RS–9	CUSTOM	STREAM CARE/ISSAQUAH CREEK	P–LINE	3+06.57	LT	12.99'	STEEL	RELOCATE POST/SIGN TO S–3. TOTAL SIGNS: 3
RS–10	R12–1	WEIGHT LIMIT	P–LINE	3+40.30	LT	13.18'	STEEL	
RS–11	CUSTOM	NARROW BRIDGE SYMBOL/SIGN	P–LINE	4+25.15	LT	15.54'	STEEL	TOTAL SIGNS: 2

SIGN INSTALLATION SCEHDULE

SIGN #	SIGN CODE	SIGN DESCRIPTION	PROPOSED SIGN LOCATION				SIGN SIZE		POST MATERIAL	COMMENTS
			STATION		LT/RT	OFFSET	WIDTH	HEIGHT		
S–1	R1–1	STOP SIGN/STREET NAME	P–LINE	1+20.32	RT	28.13'	EX.	EX.	STEEL	POST/SIGN FROM RS–2. TOTAL SIGNS: 3
S–2	CUSTOM	STREAM CARE/ISSAQUAH CREEK	P–LINE	2+21.86	RT	25.47'	EX.	EX.	STEEL	POST/SIGN FROM RS–4. TOTAL SIGNS: 3
S–3	CUSTOM	STREAM CARE/ISSAQUAH CREEK	P–LINE	3+72.00	LT	22.00'	EX.	EX.	STEEL	POST/SIGN FROM RS–9. TOTAL SIGNS: 3

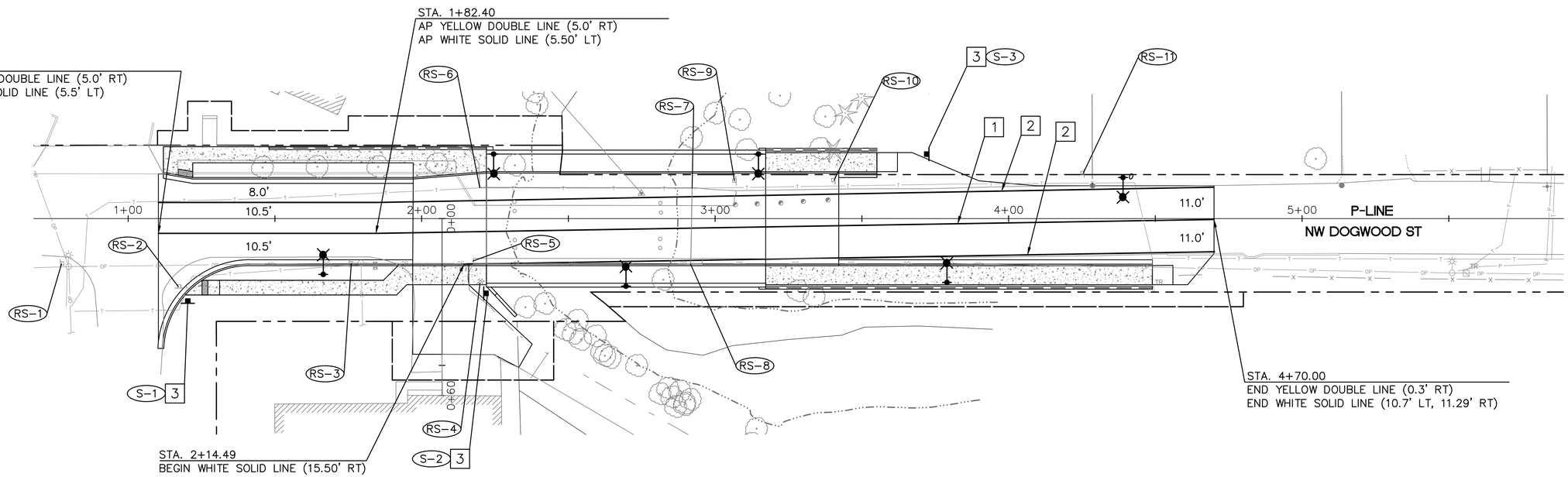

GRAPHIC SCALE
20 0 20 40
(IN FEET)

95% SUBMITTAL

DAVID EVANS AND ASSOCIATES INC.
415 - 118th Avenue SE
Bellevue Washington 98005-3518
Phone: 425.519.6500

NO.	DATE	DESCRIPTION	BY

DOGWOOD ST. BRIDGE REPLACEMENT

DRAWN OXA | DSGN. KXLA | CHKD. MLF

CITY OF ISSAQUAH

ANTHONY OTTO WILLIAN — STATE OF WASHINGTON — 49548 — REGISTERED PROFESSIONAL ENGINEER

STRIPING & SIGNING PLAN

DATE: APRIL 2014 | JOB # BRM–1408(002) | SCALE: AS NOTED

SHEET 13 OF 68

oxa 04/21/14 5:48pm – \\blvfs1\project\V\ISSY00000002\04000CAD\TT\SHEETS\TTCH001ISSY002.dwg

LUMINAIRE SCHEDULE

# NO.	ALIGNMENT	STATION,OFFSET	MAST ARM LENGTH (FT)	LUMINAIRE HEIGHT (FT)	LUMINAIRE WATTAGE	CIRCUIT	BASE	COMMENTS
L–1	P–LINE	1+66, 19.0' RT	1'	15'	79 W LED	–	SLIP	
L–2	P–LINE	2+24, 23.0' LT	1'	12'	79 W LED	–	BRIDGE	
L–3	P–LINE	2+70, 23.0' RT	1'	12'	79 W LED	–	BRIDGE	
L–4	P–LINE	3+15, 23.0' LT	1'	12'	79 W LED	–	BRIDGE	
L–5	P–LINE	3+79, 19.0' RT	1'	15'	79 W LED	–	SLIP	
L–6	P–LINE	4+39, 14.0' LT	1'	15'	79 W LED	–	SLIP	

WIRING SCHEDULE

NO. #	CONDUIT SIZE	CONDUCTORS EXISTING	CONDUCTORS NEW	CIRCUIT	COMMENTS
1	2"		2–#8	–	ROADWAY ILLUMINATION
			1–#8	–	ILLUMINATION GROUND
	2"		–	–	SPARE CONDUIT
2	1"		2–#10	–	LUMINAIRE FEED
			1–#10	–	LUMINAIRE GROUND

ILLUMINATION NOTES

1. EXISTING STREETLIGHTS MUST BE MAINTAINED UNTIL NEW STREETLIGHTS ARE OPERATIONAL UNLESS OTHERWISE APPROVED BY THE CITY ENGINEER.
2. SCHEDULE 80 RIGID PVC CONDUIT SHALL BE USED FOR ALL STREET CROSSINGS AND UNDER ALL DRIVEWAYS. SCHEDULE 40 RIGID PVC CONDUIT SHALL BE USED ELSEWHERE.
3. ALL SPARE/EMPTY CONDUIT SHALL CONTAIN PULL–LINE.
4. REMOVE EXISTING UNUSED JUNCTION BOXES, WIRING AND CONDUIT AFTER NEW STREETLIGHTS ARE OPERATIONAL.
5. THE NUMBER OF CONDUIT BENDS BETWEEN PULL POINTS SHALL NOT BE MORE THAN THE EQUIVALENT OF FOUR QUARTER BENDS (360 DEGREES TOTAL). IF THE NUMBER OF BENDS EXCEEDS 360 DEGREES, THE CONTRACTOR SHALL INSTALL ADDITIONAL JUNCTION BOXES AS REQUIRED.

CONSTRUCTION NOTES

1. EXISTING LUMINAIRE TO REMAIN. PROTECT LUMINAIRE AND CONDUIT IN PLACE.
2. CONSTRUCT STREET LIGHT STANDARD FOUNDATION PER WSDOT STD. PLAN J–28.30–02. INSTALL LIGHT STANDARD AND LED LUMINAIRE, PER LUMINAIRE SCHEDULE.
3. INSTALL LIGHT STANDARD AND LED LUMINAIRE ON BRIDGE RAILING PER LUMINAIRE SCHEDULE AND DETAILS ON SHEETS 38 & 39.
4. ROUTE CONDUIT IN BRIDGE BARRIER.
5. INSTALL JUNCTION BOX IN BRIDGE RAILING PER DETAILS ON SHEETS 38 & 39.
6. INSTALL NEW JUNCTION BOX PER CITY OF ISSAQUAH STD. PLAN TS–06.
7. ROUTE CONDUIT TO EXISTING SERVICE CONNECTION ON ADJACENT ROADWAY PROJECT.
8. CONSTRUCT STREET LIGHT FOUNDATION INTEGRAL TO SIDEWALK PER STRUCTURAL DETAILS. INSTALL LIGHT STANDARD AND LED LUMINAIRE, PER LUMINAIRE SCHEDULE.

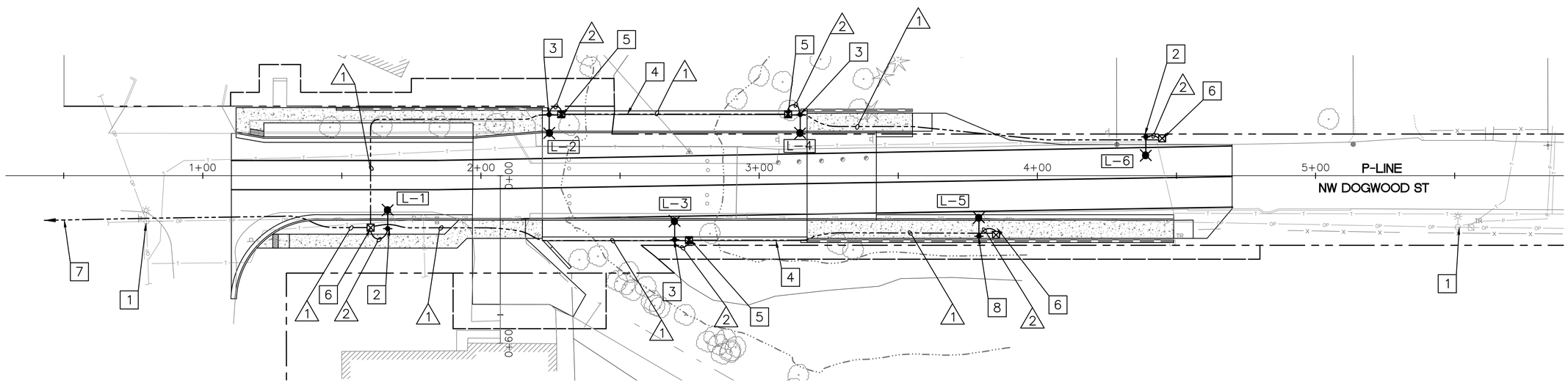

LEGEND

- EXISTING RIGHT OF WAY
- EXISTING STREETLIGHT
- PROPOSED STREETLIGHT
- PROPOSED TYPE 1 JUNCTION BOX
- PROPOSED NEMA 4X JUNCTION BOX
- PROPOSED CONDUIT

GRAPHIC SCALE
20 0 20 40
(IN FEET)

95% SUBMITTAL

DAVID EVANS AND ASSOCIATES INC.
415 - 118th Avenue SE
Bellevue Washington 98005-3518
Phone: 425.519.6500

NO.	DATE	DESCRIPTION	BY

DOGWOOD ST. BRIDGE REPLACEMENT

DRAWN OXA | DSGN. KXLA | CHKD. MLF

CITY OF ISSAQUAH

ANTHONY OTTO WILLEN — STATE OF WASHINGTON — 49548 — REGISTERED PROFESSIONAL ENGINEER

ILLUMINATION PLAN

DATE: APRIL 2014 | JOB # BRM–1408(002) | SCALE: AS NOTED

oxa 04/21/14 5:48pm – \\blvfs1\project\V\VSSY000000002\0400CAD\TT\SHEETS\TTL001ISSY002.dwg

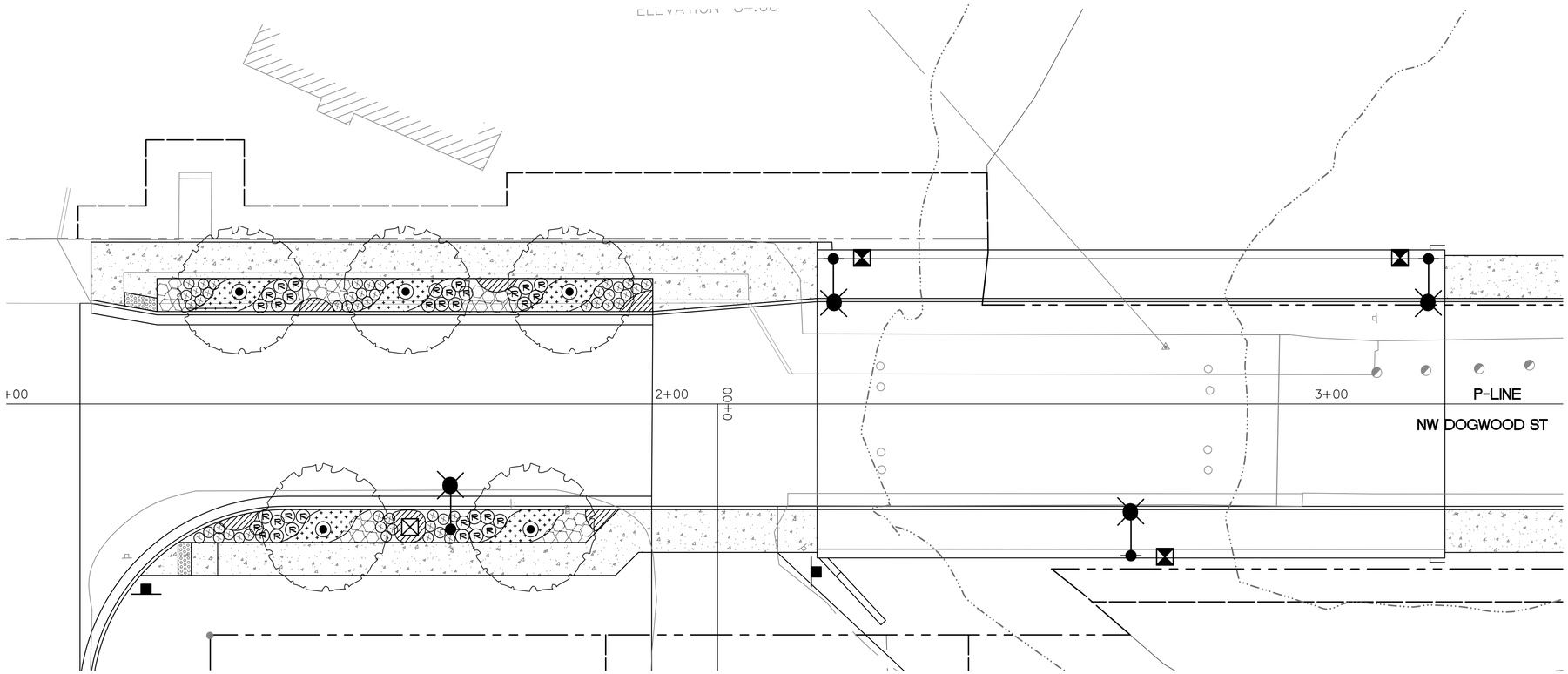

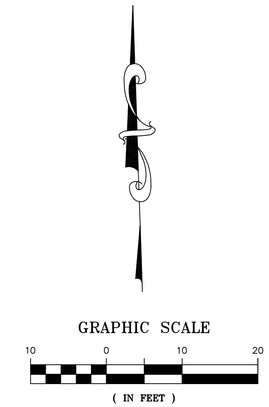

GENERAL NOTES

1. ALL PLANT MATERIALS TO MEET THE AMERICAN STANDARD FOR NURSERY STOCK, ANSI Z60.1 OR MOST CURRENT VERSION.
2. PLANT, MAINTAIN AND WARRANTY AS PER SPECIAL PROVISIONS.
3. DO NOT SUBSTITUTE SPECIES WITHOUT THE APPROVAL OF ENGINEER.
4. TOPSOIL SHALL BE USED IN THE PLANTER STRIP PER CITY OF ISSAQUAH STD. DETAIL NO. L–02 FOR TREE AND SHRUB BEDS.
5. SHRUBS SHALL BE PLANTED PER CITY OF ISSAQUAH STD. DETAIL NO. L–04.
6. STREET TREES SHALL BE PLANTED PER CITY OF ISSAQUAH STD. DETAIL NO. L–01 AND L–03.
7. PROVIDE 2'–0" DEEP TREE ROOT BARRIER FULL LENGTH (ALL AROUND) PLANTERS (DeepRoot Universal Barriers–DRUB182 OR EQUAL).

PLANT SCHEDULE

SYMBOL	BOTANICAL NAME/COMMON NAME	SIZE	QUANTITY	REMARKS
	Carpinus betulus 'Fastigiata' COLUMNAR EUROPEAN HORNBEAN	2" CAL., 15' HT MIN.	5	B & B MATCHED SINGLE TRUNK SPACED PER PLAN
	Hemerocallis fulva TAWNY DAYLILLY	4" POT	48	CONTAINER 12" O.C.
	Carex oshimensis 'Evergold' JAPANESE VARIEGATED SEDGE	1 GAL	65	CONTAINER 18" O.C.
	Lavandula angustifolia 'Hidcote Blue' ENGLISH LAVENDER	1 GAL	31	CONTAINER 24" O.C.
	Mahonia repens CREEPING MAHONIA	1 GAL	49	CONTAINER 18" O.C.
	Rosa Rugosa 'Snow Pavement' RUGOSA ROSE	1 GAL	33	CONTAINER 24" O.C.

95% SUBMITTAL

DAVID EVANS AND ASSOCIATES INC.
415 - 118th Avenue SE
Bellevue Washington 98005-3518
Phone: 425.519.6500

NO.	DATE	DESCRIPTION	BY

DOGWOOD ST. BRIDGE REPLACEMENT

DRAWN OXA | DSGN. JCGA | CHKD. MLF

CITY OF ISSAQUAH

STATE OF WASHINGTON REGISTERED LANDSCAPE ARCHITECT
JONATHAN C. GAGE
CERTIFICATE NO. 952

LANDSCAPE PLAN

DATE: APRIL 2014 | JOB # BRM–1408(002) | SCALE: AS NOTED

SHEET 15 OF 68

oxa 04/21/14 5:49pm – \\bivfs1\project\V\ISSY00000002\04000AD\TT\SHEETS\TTLA001ISSY002.dwg

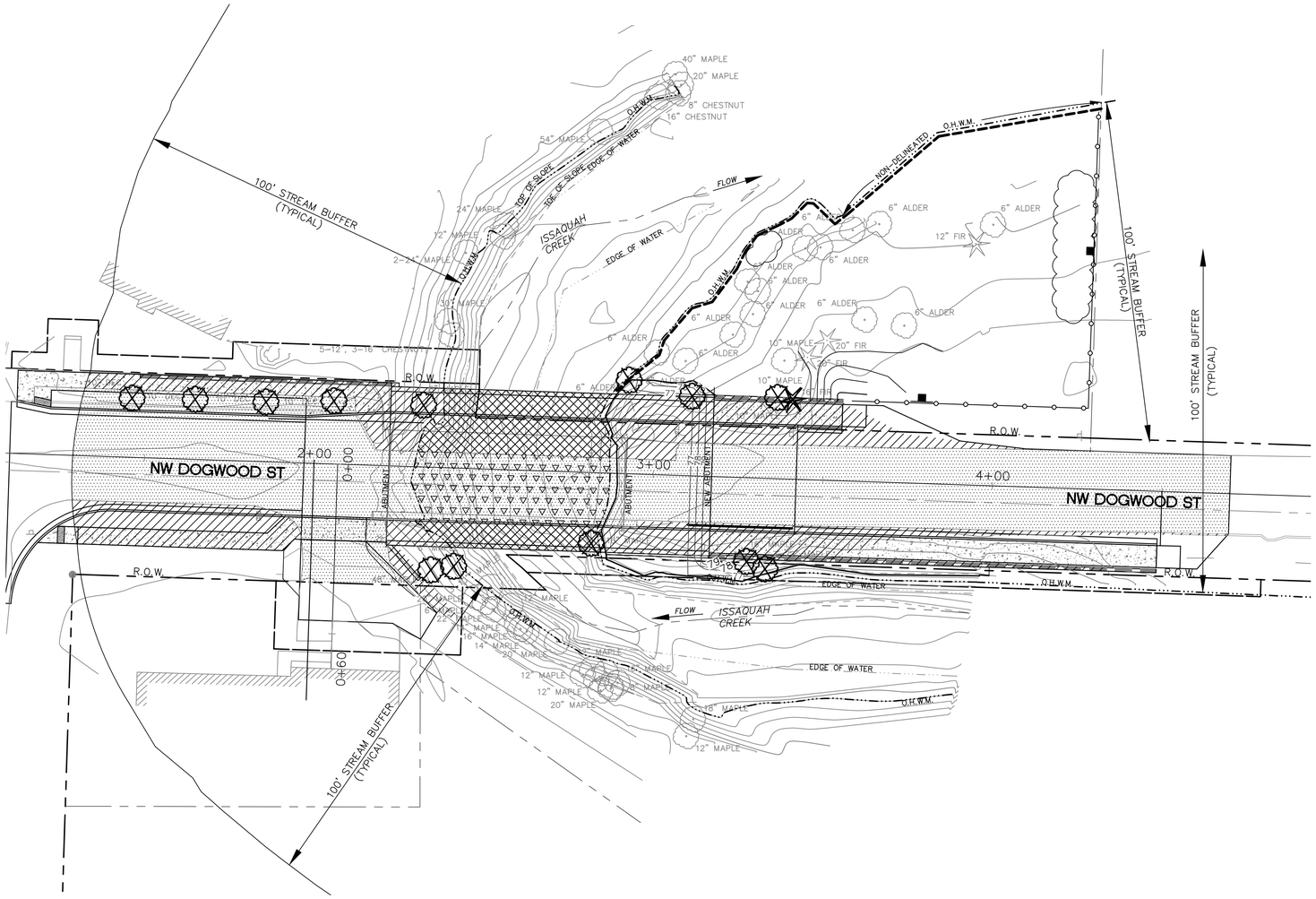

CITY OF ISSAQUAH MITIGATION SUMMARY

EXISTING CONDITIONS			
EXISTING INFRASRTUCTURE IN BUFFER:	7,906 S.F.		
EXISTING INFRASTRUCTURE OVER O.H.W.M.:	1,126 S.F.		
TOTAL INFRASTRUCTURE =	9,032 S.F.		
PERMANENT IMPACT FROM BRIDGE DEVELOPMENT		*PROPOSED MITIGATION*	
ISSAQUAH CREEEK BUFFER:	4,113 S.F.		
ISSAQUAH CREEK OVER O.H.W.M. (SHADE):	1,345 S.F.	TOTAL BUFFER ENHANCEMENT PROPOSED = @ 1.46:1 RATIO	7,966 S.F.
TOTAL IMPACT =	5,458 S.F.		
PERMANENT–TREE IMPACT		*PROPOSED MITIGATION*	
TREES REMOVED DUE TO DEVELOPMENT =	14	TREE REPLACEMENT =	39

LEGEND

- EXISTING TREES TO REMAIN
- EXISTING TREES TO BE REMOVED
- INVASIVE VEGETATION TO BE REMOVED
- EXISTING CONDITIONS (IN 100' BUFFER AND O.H.W.M.)
- EXISTING BRIDGE (IN O.H.W.M.)
- PROPOSED CONDITIONS (IN 100' BUFFER AND O.H.W.M.)
- PROPOSED BRIDGE (IN O.H.W.M.)
- O.H.W.M. — ORDINARY HIGH WATER MARK (O.H.W.M.) LINE
- WATTLE
- SPLIT RAIL FENCE
- SENSITIVE AREA SIGN

95% SUBMITTAL

GRAPHIC SCALE

20 0 20 40

(IN FEET)

DAVID EVANS AND ASSOCIATES INC.
415 - 118th Avenue SE
Bellevue Washington 98005-3518
Phone: 425.519.6500

NO.	DATE	DESCRIPTION	BY

DOGWOOD ST. BRIDGE REPLACEMENT

DRAWN OXA | DSGN. JCGA | CHKD. MLF

CITY OF ISSAQUAH

STATE OF WASHINGTON REGISTERED LANDSCAPE ARCHITECT

JONATHAN C. GAGE
CERTIFICATE NO. 952

MITIGATION SITE PLAN

DATE: APRIL 2014 | JOB # BRM–1408(002) | SCALE: AS NOTED

oxa 04/21/14 5:49pm – \\blvfs1\project\V\VSSY00000002\0400CAD\TT\SHEETS\TMT001ISSY002.dwg

LEGEND

EXISTING TREES TO REMAIN

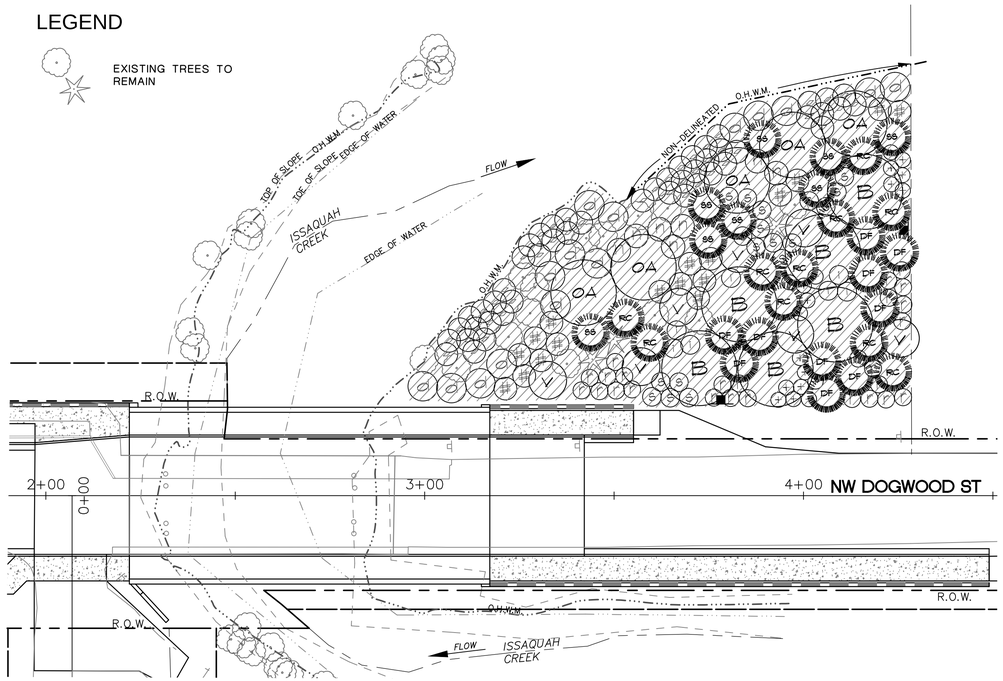

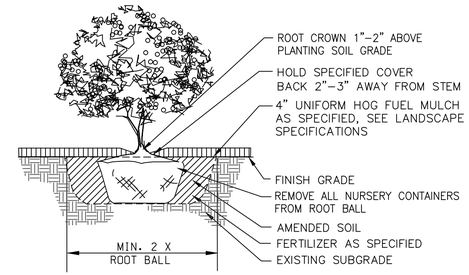

SHRUB PLANTING

NOT TO SCALE

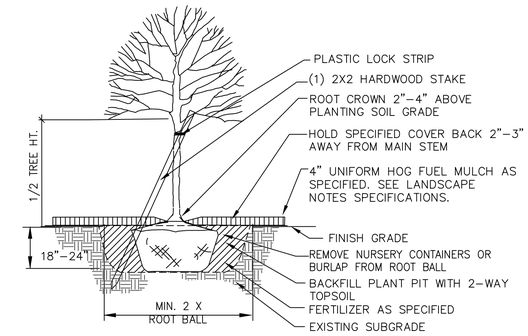

DECIDUOUS TREE PLANTING

NOT TO SCALE

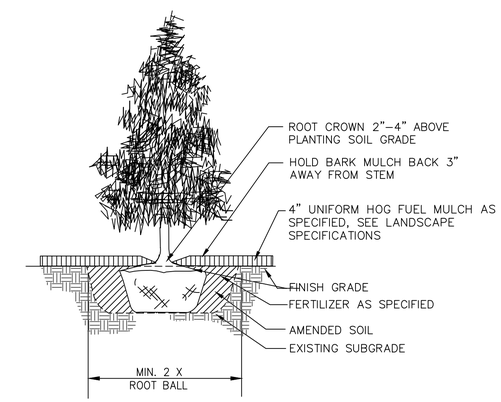

CONIFER TREE PLANTING

NOT TO SCALE

LANDSCAPE SCHEDULE

SYMBOL	BOTANICAL NAME	COMMON NAME	QUANTITY	CONDITION	SIZE (HT)	REMARKS
TREES						
B	BETULA PAPYRIFERA	PAPER BIRCH	6	5 GAL.	6' HT MIN.	SPACED AS SHOWN, STAKED
OA	FRAXINUS LATIFOLIA	OREGON ASH	5	5 GAL.	6' HT MIN.	SPACED AS SHOWN, STAKED
RC	THUJA PLICATA	WESTERN RED CEDAR	10	5 GAL.	4' HT MIN.	10' O.C.
BS	PICEA SITCHENSIS	SITKA SPRUCE	8	5 GAL.	4' HT MIN.	10' O.C.
DF	PSEUDOTSUGA MENZESII	DOUGLAS FIR	10	5 GAL.	4' HT MIN.	10' O.C.
STAKES						
d	SALIX LUCIDA	PACIFIC WILLOW	48	1 GAL.	2' HT MIN.	3' O.C.
SHRUBS						
V	ACER CIRCINATUM	VINE MAPLE	7	5 GAL.	4' HT MIN.	SPACED AS SHOWN
d	CORNUS SERICEA	RED OSIER DOGWOOD	15	2 GAL.	4' HT MIN.	8' O.C.
n	PHYSOCARPUS CAPITATUS	PACIFIC NINEBARK	7	1 GAL.	2' HT MIN.	6' O.C.
#	LONICERA INVOLUCRATA	BLACK TWINBERRY	17	2 GAL.	4' HT MIN.	6' O.C.
r	ROSA NUTKANA	NOOTKA ROSE	26	1 GAL.	2' HT MIN.	5' O.C.
+	SYMPHORICARPOS ALBUS	SNOWBERRY	19	1 GAL.	2' HT MIN.	4' O.C.
s	RUBUS SPECTABILIS	SALMONBERRY	18	1 GAL.	2' HT MIN.	5' O.C.
i	OEMLERIA CERASIFORMIS	INDIAN PLUM	7	2 GAL.	2' HT MIN.	5' O.C.
SURFACE MATERIALS						
	HOG FUEL MULCH	MEDIUM BARK MULCH	96	C.Y.	4" DEPTH	

95% SUBMITTAL

GRAPHIC SCALE

20 0 20 40

(IN FEET)

DAVID EVANS AND ASSOCIATES INC.
415 - 118th Avenue SE
Bellevue Washington 98005-3518
Phone: 425.519.6500

NO.	DATE	DESCRIPTION	BY

DOGWOOD ST. BRIDGE REPLACEMENT

DRAWN OXA | DSGN. JCGA | CHKD. MLF

CITY OF ISSAQUAH

STATE OF WASHINGTON REGISTERED LANDSCAPE ARCHITECT

JONATHAN C. GAGE
CERTIFICATE NO. 952

PLANTING PLAN

DATE: APRIL 2014 | JOB # BRM-1408(002) | SCALE: AS NOTED

SHEET 17 OF 68

oxa 04/21/14 5:49pm – \\blvfs1\project\V\SSY00000002\0400CAD\TT\SHEETS\TM1T002SSY002.dwg

PART 1 – SITE PREPARATION

GENERAL SITE CONDITIONS
CONTRACTOR SHALL GIVE THE OWNER'S REPRESENTATIVE A MINIMUM OF 5 WORKING DAYS NOTICE PRIOR TO CONSTRUCTION.

NO CONSTRUCTION WORK SHALL COMMENCE UNTIL THERE IS A PRE–CONSTRUCTION MEETING BETWEEN THE CITY OF RENTON, THE OWNER'S REPRESENTATIVE AND CONTRACTOR TO REVIEW THE MITIGATION PLANS AND SPECIFICATIONS.

IT IS THE RESPONSIBILITY OF THE CONTRACTOR TO: (1) INDEPENDENTLY VERIFY THE ACCURACY OF UTILITY LOCATIONS AND (2) DISCOVER AND AVOID ANY UTILITIES WITHIN THE MITIGATION AREA WHICH MAY BE AFFECTED BY IMPLEMENTATION OF THIS PLAN. SUCH AREAS ARE TO BE CLEARLY MARKED IN THE FIELD.

CONSTRUCTION MUST BE PERFORMED IN ACCORDANCE WITH CODES, PERMIT CONDITIONS, AND OTHER APPLICABLE ORDINANCES AND POLICIES.

THE APPLICANT IS RESPONSIBLE FOR OBTAINING ALL REQUIRED PERMITS/APPROVALS PRIOR TO THE START OF CONSTRUCTION. A COPY OF THE APPROVED PLANS, SPECIFICATIONS, PERMITS, AND AGENCY APPROVALS MUST BE ON SITE WHENEVER CONSTRUCTION IS IN PROGRESS AND SHALL REMAIN ON SITE UNTIL PROJECT COMPLETION.

THE OWNER'S REPRESENTATIVE SHALL BE ON SITE, AS NECESSARY, TO MONITOR CONSTRUCTION.

ANY CHANGES OR MODIFICATIONS TO THIS PLAN SHALL RECEIVE PRIOR APPROVAL FROM THE OWNER'S REPRESENTATIVE

SURVEY/STAKE/FLAG LIMITS OF WORK
PRIOR TO ANY CONSTRUCTION, A LICENSED SURVEYOR SHALL SURVEY, STAKE, AND FLAG LIMITS OF WORK AND WETLAND BOUNDARIES AS SHOWN IN THE PLANS. ELECTRONIC DRAWINGS SHOWING LIMITS OF WORK ARE AVAILABLE UPON REQUEST. THE OWNER'S REPRESENTATIVE SHALL APPROVE FLAGGING OF WORK LIMITS PRIOR TO CONSTRUCTION. CONTRACTOR SHALL BE RESPONSIBLE FOR VERIFYING ACTUAL LOCATIONS OF EXISTING VEGETATION TO BE SAVED AND RESTORING ANY DISTURBANCE TO EXISTING VEGETATION LOCATED OUTSIDE THE LIMITS OF WORK.

EROSION CONTROL
ALL EROSION CONTROL MEASURES SHALL BE INSTALLED AND IMPLEMENTED AS SHOWN IN THE S.W.P.P. PLAN (SHEET C–3) PRIOR TO BEGINNING OF WORK.

CLEARING AND GRUBBING
CLEAR AND GRUB ALL AREAS SHOWN IN THE GRADING PLANS TO A 6" DEPTH (SEE GRADING PLAN). ALL CLEARING AND GRUBBING AND VEGETATION TO REMAIN AREAS SHALL BE APPROVED BY MITIGATION CONSTRUCTION MONITOR PRIOR TO WORK. PRIOR TO GRUBBING THE CONTRACTOR SHALL CLEAR ALL INVASIVE SPP. TO THE GROUND AND APPLY HERBICIDE. HERBICIDE APPLICATION SHALL OCCUR DURING THE GROWING SEASON BY LICENSED (IN STATE OF WASHINGTON) APPLICATOR. HERBICIDE SHALL BE BROAD SPECTRUM AQUATIC HERBICIDE (RODEO TM OR APPROVED EQUAL).

CONTRACTOR SHALL REMOVE INVASIVE PLANT SPECIES WITH MINIMAL DISTURBANCE TO THE EXISTING VEGETATION TO REMAIN. CLEARED AND GRUBBED VEGETATION SHALL BE EXPORTED FROM THE SITE. PARTICULAR CARE SHALL BE TAKEN TO ENSURE COMPLETE REMOVAL OF TOPS AND ROOTS OF INVASIVE PLANT SPECIES. INVASIVE PLANT SPECIES TO BE REMOVED AND TREATED INCLUDE BUT ARE NOT LIMITED TO: HIMALAYAN BLACKBERRY, JAPANESE KNOTWEED, REED CANARYGRASS, PURPLE LOOSESTRIFE, HEDGE BINDWEED (MORNING GLORY), SCOT'S BROOM, ENGLISH IVY, AND CREEPING NIGHTSHADE.

PART 2 – PLANT MATERIAL

PLANT MATERIALS
PLANT MATERIAL SHALL CONFORM TO AMERICAN STANDARD FOR NURSERY STOCK (ANSI Z60.1–2004) FOR PLANT SIZE AND CONDITION FOR SPECIFIED MATERIAL.

PLANT MATERIALS SHALL BE LOCALLY GROWN (LOWER PUGET SOUND REGION) OR ALTERNATIVE APPROVED SOURCE BY THE OWNER'S REPRESENTATIVE. PLANT MATERIALS SHALL BE IN HEALTHY VIGOROUS GROWING CONDITION.

THE CONTRACTOR SHALL SUBMIT DOCUMENTATION THAT SPECIFIED PLANT MATERIALS HAVE BEEN ORDERED AND SECURED. A LIST OF SUPPLIER NAMES, ADDRESSES, PHONE NUMBERS AND THE STORAGE/GROWING LOCATION OF THE MATERIALS SHALL BE SUBMITTED TO THE OWNER'S REPRESENTATIVE WITHIN 30 DAYS OF CONTRACTOR AWARD.

PLANT CONDITION
THE OWNER'S REPRESENTATIVE SHALL APPROVE PLANT MATERIAL AT THE JOB SITE FOR COMPLIANCE WITH REQUIRED STANDARDS FOR PLANT SIZE AND QUALITY PRIOR TO PLANTING. THIS INCLUDES, BUT IS NOT LIMITED TO, SIZE AND CONDITION OF ROOTBALLS AND ROOT SYSTEMS, PRESENCE OF INSECTS, LATENT INJURIES AND DEFECTS. TREES MUST BE UNTIED AND SEPARATED FOR INSPECTIONS. THE OWNER'S REPRESENTATIVE RESERVES THE RIGHT TO REFUSE ANY/ALL PLANT MATERIAL IF IT IS DETERMINED THAT SUCH MATERIAL DOES NOT MEET THE SPECIFICATIONS AS DESCRIBED HEREIN. REJECTED MATERIAL SHALL BE IMMEDIATELY REMOVED FROM PROJECT SITE.

PART 2 – PLANT MATERIAL cont.

STORAGE SITE AND METHOD
STORE PLANTS IN THE MANNER NECESSARY TO ACCOMMODATE THEIR HORTICULTURAL REQUIREMENTS. PROTECT PLANT MATERIAL STORED ON–SITE FROM WEATHER DAMAGE, CONSTRUCTION ACTIVITY AND THE PUBLIC. BALLED AND BURLAPPED MATERIAL WHICH CANNOT BE INSTALLED IMMEDIATELY SHALL BE "HEELED–IN" TO KEEP FROM DRYING OUT PRIOR TO PLANTING. PROTECT ROOTBALLS BY COVERING WITH MOIST SOIL, MULCH OR SAWDUST. WATER AS NECESSARY TO KEEP ROOTBALLS MOIST.

KEEP PLANT SPECIMENS MOIST AND SHADED UNTIL THE ACTUAL TIME OF INSTALLATION. IF BARE–ROOT PLANTS ARE SPECIFIED, SOAK ROOTS IN WATER ONE–HOUR MINIMUM PRIOR TO PLANTING. BEFORE AND AFTER PLANTING, IMMEDIATELY SATURATE THE SOILS IN THE PLANTING AREA TO PREVENT CAPILLARY STRESS.

SUBSTITUTIONS
SUBSTITUTIONS OF PLANT SPECIES OR SIZES MAY BE PERMITTED BASED ON PLANT AVAILABILITY, BUT ONLY WITH PRIOR APPROVAL BY THE OWNER'S REPRESENTATIVE.

PART 3 – PLANT INSTALLATION

SITE CONDITIONS
THE CONTRACTOR SHALL VERIFY THAT PLANT INSTALLATION CONDITIONS ARE SUITABLE WITHIN THE MITIGATION AREAS. ANY UNSATISFACTORY CONDITIONS SHALL BE CORRECTED PRIOR TO START OF WORK. WHEN CONDITIONS DETRIMENTAL TO PLANT GROWTH ARE ENCOUNTERED, SUCH AS RUBBLE FILL, ADVERSE DRAINAGE CONDITIONS, SIGNIFICANT VEGETATION, OR OBSTRUCTIONS, THE CONTRACTOR SHALL NOTIFY THE OWNER'S REPRESENTATIVE PRIOR TO PLANTING. NO PLANTING SHALL OCCUR IN STANDING WATER, AND INUNDATED PLANTING AREAS SHALL BE PLANTED WHEN CONDITIONS PERMIT. BEGINNING OF WORK CONSTITUTES ACCEPTANCE OF CONDITIONS AS SATISFACTORY.

LOCATE/FLAG/VERIFY PLANTING AREAS
CONTRACTOR SHALL FIELD LOCATE, AND FLAG, PLANTING AREAS AND CONFIGURATIONS PRIOR TO PLANTING. THE OWNER'S REPRESENTATIVE SHALL REVIEW AND APPROVE LOCATIONS PRIOR TO PLANTING.

FERTILIZER
FERTILIZE ALL WOODY PLANTINGS (TREES AND SHRUBS) ONLY WITH A LOW–RELEASE (14–MONTH), HIGH NITROGEN GRANULAR FERTILIZER (16+11+10+2MgO), WITH APPLICATION RATES PER MANUFACTURER'S WRITTEN INSTRUCTIONS. APPLY FERTILIZER AFTER PLANTING PIT IS BACKFILLED, AND PRIOR TO APPLICATION OF MULCH. DO NOT APPLY FERTILIZER BETWEEN NOVEMBER AND MARCH.

MULCH
HOG FUEL MULCH SHALL BE PLACED TO A 4" DEPTH. HOG FUEL SHALL BE A BLEND OF LOOSE, LONG, THIN NATURAL WOOD PIECES WITH HIGH LENGTH–TO–WIDTH RATIO. A MINIMUM OF 95–PERCENT SHALL HAVE LENGTHS BETWEEN 2 AND 10 INCHES, AND NO MORE THAN 15% BY LOOSE VOLUME WILL PASS THROUGH A NO. 4 SIEVE. CONTRACTOR SHALL SUBMIT SAMPLE FOR APPROVAL.

HOG FUEL MULCH SHALL NOT CONTAIN RESIN, TANNIN, OR OTHER COMPOUNDS IN QUANTITIES THAT WOULD BE DETRIMENTAL TO PLANT LIFE. SAWDUST OR WOOD SHAVINGS SHALL NOT BE USED AS MULCH.

STAKING
TREES SHALL BE STAKED WITH AT LEAST ONE STAKE, 1/3 THE HEIGHT OF THE TREES. CONTRACTOR SHALL REMOVE STAKES AT THE END OF THE WARRANTY PERIOD.

PART 4 – NATIVE GROWTH PROTECTION AREA SIGNS

NATIVE GROWTH PROTECTION AREA (NGPA) SIGN INSTALLATION
THE CONTRACTOR SHALL ATTACH NGPA SIGNS TO POSTS AND INSTALL ALONG (NGPA) BOUNDARY AT 100–FOOT INTERVALS. THE CONTRACTOR SHALL SUPPLY AND INSTALL THE NGPA SIGNS AND POSTS UPON CONSTRUCTION COMPLETION OF THE PROJECT.

CLEAN–UP
LANDSCAPE CONTRACTOR SHALL BE RESPONSIBLE FOR THE REMOVAL OF CONSTRUCTION MATERIALS AND DEBRIS FROM THE SITE FOLLOWING INSTALLATION OF PLANT MATERIALS.

PART 5 – FINAL ACCEPTANCE

UPON COMPLETION, THE CONTRACTOR SHALL PROVIDE THE OWNER'S REPRESENTATIVE WITH A SET OF CLEARLY MARKED PRINTS DESIGNATING THE ACTUAL LOCATIONS AND QUANTITIES OF PLANTINGS WITHIN THE MITIGATION AREAS. THE CONTRACTOR SHALL KEEP A COMPLETE SET OF PRINTS AT THE JOB SITE DURING CONSTRUCTION FOR THE PURPOSE OF "RED–LINING" CHANGES OR MODIFICATIONS TO THE APPROVED PLANS AND SHALL UPDATE SAID INFORMATION ON A DAILY BASIS. CONTRACTOR SHALL TAG INDIVIDUAL PLANT SPECIES AT THE TIME OF INSTALLATION. EACH PLANT SPECIES SHALL HAVE A DIFFERENT COLOR TAG FOR VISUAL IDENTIFICATION. A COLOR CODED PLANT TAG LEGEND SHALL BE PROVIDED TO THE OWNER'S REPRESENTATIVE PRIOR TO SUBSTANTIAL COMPLETION.

AT SUBSTANTIAL COMPLETION
THE OWNER'S REPRESENTATIVE WILL PERFORM SUBSTANTIAL COMPLETION WALK THROUGH WITH THE CONTRACTOR. IF ITEMS ARE TO BE CORRECTED, A PUNCH LIST WILL BE PREPARED BY THE OWNER'S REPRESENTATIVE AND SUBMITTED TO THE OWNER AND CONTRACTOR FOR COMPLETION. AFTER PUNCH LIST ITEMS HAVE BEEN COMPLETED, THE OWNER'S REPRESENTATIVE WILL REVIEW THE PROJECT FOR GENERAL CONFORMANCE WITH THE APPROVED PLAN, AND ACCEPTABLE, WILL SUBMIT A LETTER OF COMPLETION TO CITY OF ISSAQUAH. THE LETTER WILL CONSTITUTE FINAL ACCEPTANCE OF THE PROJECT.

THE DATE OF FINAL ACCEPTANCE WILL CONSTITUTE THE BEGINNING OF THE ONE–YEAR WARRANTY/MAINTENANCE PERIOD AND THE 5–YEAR MAINTENANCE/MONITORING PERIOD AS REQUIRED BY CITY OF ISSAQUAH.

PART 6 – WARRANTY (ONE–YEAR)

THE CONTRACTOR SHALL WARRANT CRAFTSMANSHIP AND MATERIALS FOR THIS PROJECT FOR A PERIOD OF 1 YEAR BEGINNING AT FINAL ACCEPTANCE. THIS WARRANTY SHALL INCLUDE REPLACEMENT OF PLANTS (SAME SIZE AND SPECIES SHOWN ON THE DRAWINGS). EXCEPT FOR LOSS DUE TO EXCESSIVELY SEVERE CLIMATOLOGICAL CONDITIONS (SUBSTANTIATED BY 10–YEAR RECORDED WEATHER CHARTS), INSTALLED PLANT MATERIALS ARE REQUIRED TO BE GUARANTEED FOR 1 YEAR AGAINST DEFECTS AND UNSATISFACTORY GROWTH, EXCEPT FOR CASES OF NEGLECT BY OWNER OR ABUSE/DAMAGE BY OTHERS.

PART 7 – MAINTENANCE

MAINTENANCE IS REQUIRED DURING THE WARRANTY PERIOD. THE CONTRACTOR SHALL REVIEW LANDSCAPE MAINTENANCE REQUIREMENTS WITH THE OWNER'S REPRESENTATIVE WHO IS FAMILIAR WITH THE STATED GOALS AND OBJECTIVES OF THE MITIGATION PLAN. MAINTENANCE SHALL BE PROVIDED BY THE CONTRACTOR THROUGHOUT CONSTRUCTION AND DURING THE WARRANTY PERIOD, AND BY THE OWNER AFTER THE FIRST YEAR.

MAINTENANCE SHALL INCLUDE TEMPORARY IRRIGATION. THE CONTRACTOR IS RESPONSIBLE TO ENSURE THE PROPER FUNCTIONING OF THE SYSTEM.

MAINTENANCE WITHIN THE MITIGATION AREAS SHALL BE PERFORMED BY THE CONTRACTOR OR OWNER AND REVIEWED BY THE MITIGATION MONITOR. REQUIRED MAINTENANCE ACTIVITIES ARE INCLUDED IN TABLE 1 (SHEET X).

95% SUBMITTAL

DAVID EVANS AND ASSOCIATES INC.
415 - 118th Avenue SE
Bellevue Washington 98005-3518
Phone: 425.519.6500

NO.	DATE	DESCRIPTION	BY

DOGWOOD ST. BRIDGE REPLACEMENT

DRAWN OXA | DSGN. JCGA | CHKD. MLF

CITY OF ISSAQUAH

STATE OF WASHINGTON REGISTERED LANDSCAPE ARCHITECT
JONATHAN C. GAGE
CERTIFICATE NO. 952

PLANTING SPECIFICATIONS

DATE: APRIL 2014 | JOB # BRM–1408(002) | SCALE: AS NOTED

oxa 04/21/14 5:49pm – \\bivfs1\project\V\ISSY00000002\0400CAD\TT\SHEETS\TM1003SSY002.dwg

PART 7 – MAINTENANCE cont.

THE CONTRACTOR SHALL CORRECT EROSION AND DRAINAGE PROBLEMS AS SPECIFIED ON THE PLANS THROUGHOUT THE ONE-YEAR WARRANTY PERIOD.

THE CONTRACTOR SHALL REMOVE SILT FENCING AT THE END OF THE ONE-YEAR WARRANTY PERIOD AND RESTORE THE FENCE AREA BY HAND SEEDING BETWEEN APRIL 1ST AND OCTOBER 15TH, ALL BARE AREAS GREATER THAN ONE SQUARE FOOT.

MAINTENANCE WITHIN THE MITIGATION AREAS SHALL BE PERFORMED BY THE CONTRACTOR OR OWNER UNDER DIRECTION OF THE CONSTRUCTION WETLAND MONITOR. REQUIRED MAINTENANCE ACTIVITIES ARE INCLUDED IN TABLE 2.

PART 8 – MONITORING

MITIGATION MONITORING SHALL BE CONDUCTED BY A WETLAND BIOLOGIST FOR FIVE (5) YEARS WHICH INCLUDES THE INSTALLATION INSPECTION (ONE YEAR WARRANTY INSPECTION). THE OBJECTIVE OF THE MONITORING PROGRAM SHALL BE TO ASSESS REVEGETATION SUCCESS. REPORTS DESCRIBING MONITORING RESULTS SHALL BE SUBMITTED TO THE CITY OF ISSAQUAH, U.S. ARMY CORPS OF ENGINEERS, AND WASHINGTON DEPARTMENT OF FISH AND WILDLIFE BY DECEMBER 31 OF YEARS 1 THROUGH 5. THE MONITORING RESULTS SHALL BE RELATED TO THE PERFORMANCE STANDARDS AND IF WARRANTED, RECOMMENDATIONS SHALL BE MADE BASED ON THESE FINDINGS.

PART 9 – PERFORMANCE STANDARDS

PERFORMANCE STANDARDS HAVE BEEN ESTABLISHED THAT CORRESPOND TO THE STATED MITIGATION GOALS AND OBJECTIVES. THESE STANDARDS ARE THE PRIMARY FACTORS THAT SHALL BE USED TO JUDGE THE SUCCESS OF THE MITIGATION PROJECT. IT SHALL BE EXCEEDINGLY IMPORTANT TO EVALUATE THE DEVELOPMENT OF THE MITIGATION PLAN OVER THE ENTIRE MONITORING PERIOD WHEN DETERMINING WHETHER EACH INDIVIDUAL STANDARD HAS BEEN MET OR NOT. WHILE SPECIFIC PERFORMANCE CRITERIA PROVIDE IMPORTANT BENCHMARKS AND SHALL HELP TO DIRECT MAINTENANCE AND CONTINGENCY EFFORTS, THE SUCCESS OF MITIGATION MUST BE MEASURED AGAINST THE GOALS AND OBJECTIVES OF THE OVERALL MITIGATION PLAN. BY MONITORING THE PROJECT AND COMPARING MONITORING RESULTS TO PERFORMANCE STANDARDS, A DETERMINATION CAN BE MADE FOR THE NEED TO IMPLEMENT MAINTENANCE EFFORTS OR THE CONTINGENCY PLAN. PERFORMANCE STANDARDS ARE IDENTIFIED IN THE TABLE BELOW.

TABLE 2: MAINTENANCE TASKS

ACTIVITY	SCHEDULE	SPECIAL NOTES
REPLACE ALL FAILED MITIGATION PLANTINGS.	ONE YEAR FOLLOWING PLANTING. THEN AS REQUIRED TO MEET PERFORMANCE STANDARDS.	BY CONTRACTOR THE FIRST YEAR; BY OWNER AFTER FIRST YEAR.
TEMPORARY IRRIGATION OF NEW PLANTINGS.	AT LEAST WEEKLY, MAY 15 THROUGH OCTOBER 31 FOR THE FIRST YEAR FOLLOWING PLANTING.	ALL PLANTS MUST RECEIVE ONE INCH OF WATER PER WEEK DURING THE FIRST GROWING SEASON.
TRASH REMOVAL FROM NGPA	INSPECT AT LEAST ONCE EACH YEAR FOR YEARS 1, 2, 3, AND 5 OF THE FIVE YEAR MONITORING PERIOD.	BY CONTRACTOR THE FIRST YEAR AND OWNER AFTER THE FIRST YEAR.
REPAIR/REPLACE NGPA SIGNS	INSPECT AT LEAST ONCE EACH YEAR FOR YEARS 1, 2, 3, AND 5 OF THE FIVE YEAR MONITORING PERIOD.	BY OWNER
WEEDING	AT LEAST ONCE EACH YEAR FOR YEARS 1, 2, 3, 4, AND 5 OF THE FIVE YEAR MONITORING PERIOD	TREES AND SHRUBS MUST BE WEEDED TO THE DRIPLINE AND MULCH MAINTAINED AT 3 INCHES DEPTH. BY CONTRACTOR THE FIRST YEAR; BY OWNER AFTER THE FIRST YEAR.
CLEAR AND GRUB UNDESIRABLE INVASIVE PLANTS FROM NGPA. UNDESIRABLE SPECIES INCLUDE: HIMALAYAN BLACKBERRY EVERGREEN BLACKBERRY SCOT'S BROOM ENGLISH IVY PURPLE LOOSE STRIFE MORNING GLORY CLIMBING NIGHTSHADE JAPANESE KNOTWEED REED CANARYGRASS	AS REQUIRED IN ANNUAL MONITORING REPORTS.	REMOVAL SHOULD BE AS DIRECTED BY WETLAND CONSTRUCTION MONITOR DURING FIRST YEAR. CLEARING AND GRUBBING SHALL BE ACCOMPLISHED BY PHYSICALLY (NON-MECHANICAL) REMOVING PLANT MATERIALS (INCLUDING ROOT MASSES) OR HAND TRIMMING BY CONTRACTOR. WEEDS MUST BE PROPERLY DISPOSED OF OFF-SITE. BY CONTRACTOR THE FIRST YEAR; BY OWNER AFTER THE FIRST YEAR.

PART 10 – MITIGATION APPROACH

MITIGATE FOR 4,315 SF (0.10 AC) OF IMPACT TO RIPARIAN BUFFER (FROM DEVELOPMENT) AND 1,345 SF (0.03 AC) OF IMPACT BELOW ORDINARY HIGH WATER MARK (FROM SHADE), FOR A TOTAL IMPACT OF 5,458 SF (0.13 AC) BY PROVIDING RIPARIAN BUFFER ENHANCEMENT.

PART 11 – GOALS AND OBJECTIVES

1. REPLACE LOST FUNCTIONS FROM PERMANENT IMPACTS TO 5,458 SF OF RIPARIAN BUFFER AND BELOW OHWM, BY ENHANCING 7,966 SF OF RIPARIAN BUFFER. ENHANCMENT WILL INCLUDE THE PRESERVATION OF EXISTING NATIVE VEGETATION, REMOVING INVASIVE WEED SPECIES AND INSTALLING NATIVE TREES AND SHRUBS THAT CREATE PLANT DIVERSITY AND HABITAT.

PERFORMANCE STANDARDS	MONITORING METHODS	MONITORING INTERVAL
1. 100 PERCENT SURVIVAL OF ALL INSTALLED NATIVE TREES AND SHRUBS ONE-YEAR POST INSTALLATION OF ALL BUFFER PLANTS. 2. ESTABLISHMENT OF TRANSECTS IN MITIGATION MONITORING PLANTING AREAS FOR FIVE YEARS OF COVERAGE DATA. 3. FOR RIPARIAN BUFFER MONITORING: TREE AND SHRUB COVER: > 35% BY YEAR 3, >50% BY YEAR 4, >70% BY YEAR 5 TREE AND SHRUB SURVIVAL: 100% BY YEAR 1, 90% BY YEAR 2, 85% BY YEAR 3.	1. TOTAL PLANT COUNT OF INSTALLED TREES AND SHRUBS SHALL DETERMINE ONE YEAR WARRANTY AND PERFORMANCE STANDARD OF SURVIVAL. 2. INSTALLED TREE AND SHRUB COVERAGE SHALL BE ESTIMATED USING THE LINE-INTERCEPT METHOD ALONG TRANSECTS ESTABLISHED IN THE MITIGATION AREAS (AS NOTED IN PERFORMANCE STANDARDS). 3. PHOTOGRAPHIC DOCUMENTATION SHALL OCCUR WITH EACH MONITORING FROM ESTABLISHED PHOTOPOINTS TO PROVIDE ADDITIONAL DOCUMENTATION OF PLANT SUCCESS.	YEARS 1, 2, 3, 4 AND 5 (RIPARIAN BUFFER ONLY)
4. AT LEAST 4 NATIVE TREE SPECIES AND 6 NATIVE SHRUB SPECIES SHALL BE ESTABLISHED IN THE MITIGATION AREA.		YEARS 1, 2, 3, 4 AND 5 (RIPARIAN BUFFER ONLY)
5. UP TO 20% OF ANY STRATUM CAN BE COMPOSED OF DESIRABLE NATIVE VOLUNTEERS WHEN MEASURING COVER. NO MORE THAN 10% COVER OF NON-NATIVE OR OTHER INVASIVES, E.G., HIMALAYAN BLACKBERRY, JAPANESE KNOTWEED, EVERGREEN BLACKBERRY, REED CANARYGRASS, SCOTS BROOM, ENGLISH IVY, MORNING GLORY, ETC. IS PERMISSIBLE IN ANY MONITORING YEAR. BOND HOLDERS ARE ENCOURAGED TO MAINTAIN MITIGATION SITES WITHIN THESE STANDARDS THROUGHOUT THE MONITORING PERIOD, TO AVOID CORRECTIVE MEASURES.		YEARS 1, 2, 3, 4 AND 5 (RIPARIAN BUFFER ONLY)

95% SUBMITTAL

DAVID EVANS AND ASSOCIATES INC.
415 - 118th Avenue SE
Bellevue Washington 98005-3518
Phone: 425.519.6500

NO.	DATE	DESCRIPTION	BY

DOGWOOD ST. BRIDGE REPLACEMENT

DRAWN OXA | DSGN. JCGA | CHKD. MLF

CITY OF ISSAQUAH

STATE OF WASHINGTON REGISTERED LANDSCAPE ARCHITECT
JONATHAN C. GAGE
CERTIFICATE NO. 952

MONITORING PLAN

DATE: APRIL 2014 | JOB # BRM-1408(002) | SCALE: AS NOTED

oxa 04/21/14 5:49pm – \\blvfs1\project\V\VSSY00000002\0400CAD\TT\SHEETS\TMT004ISSY002.dwg

SEC. 28, T. 24 N., R. 6 E., W.M.
CITY OF ISSAQUAH

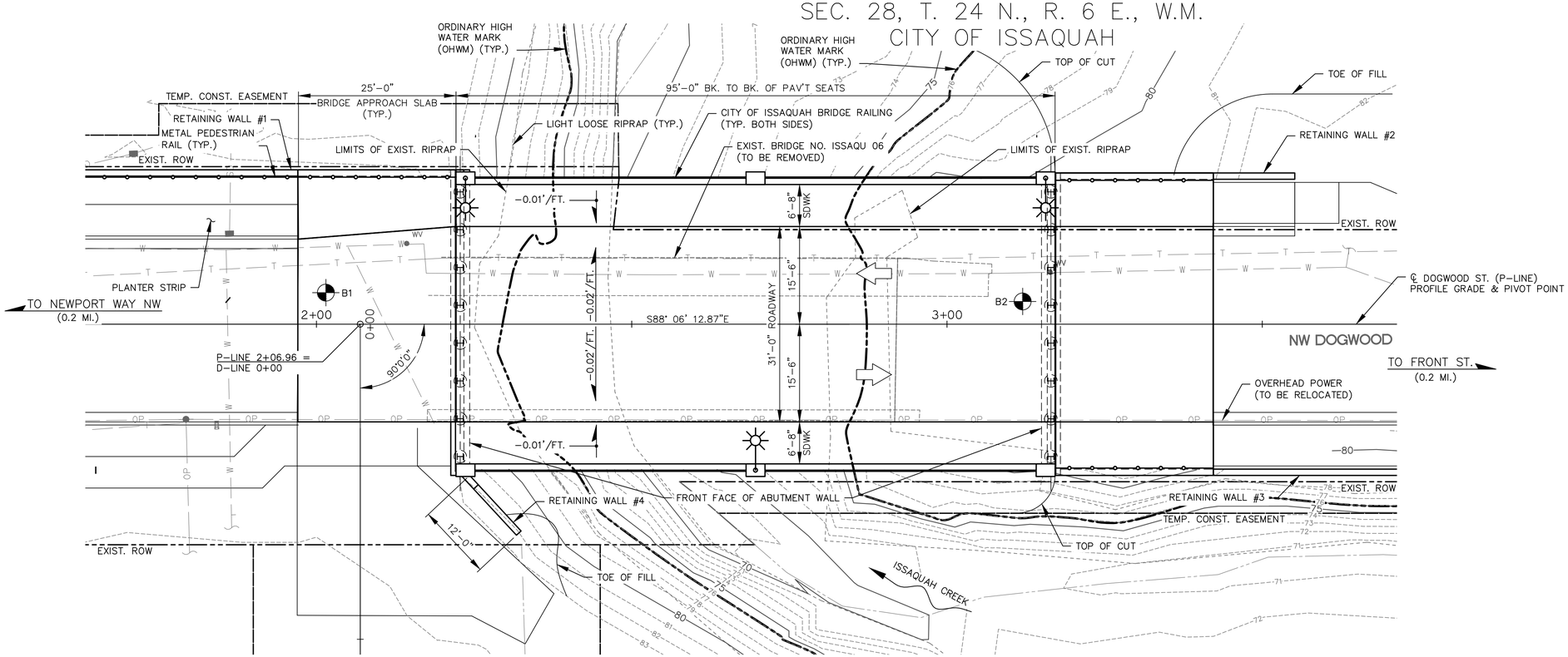

PLAN

THE BEARING OF ALL PIERS IS NORMAL TO THE P-LINE

GRAPHIC SCALE

0 10 20 30

(IN FEET)

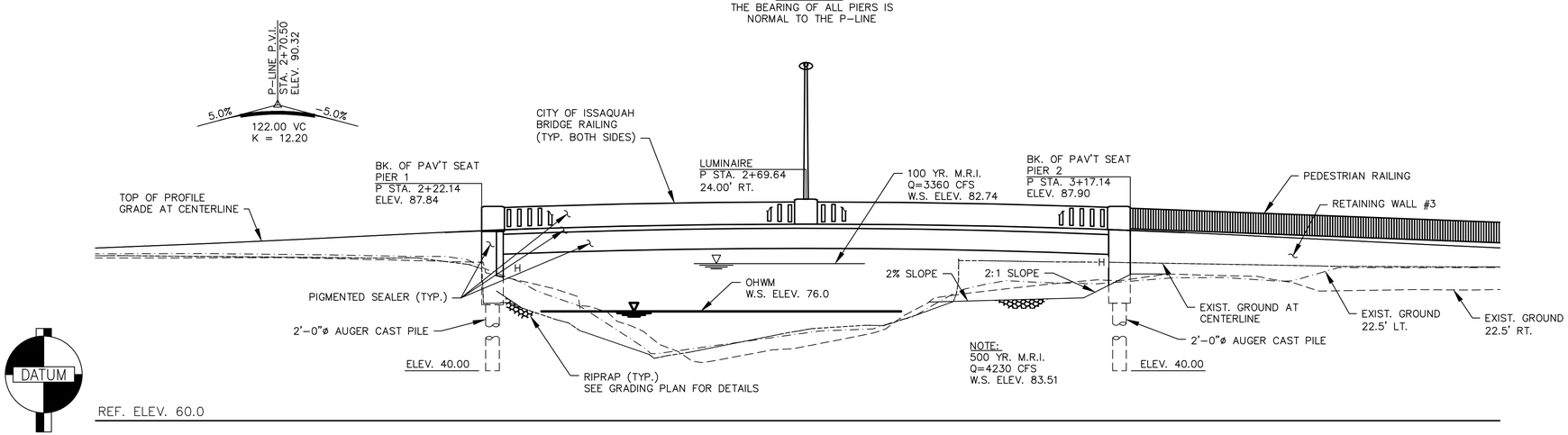

ELEVATION

GRADE ELEVATIONS SHOWN ARE FINISHED GRADE AT TOP OF HMA AND ARE EQUAL TO THE PROFILE GRADE

LEGEND

EXISTING		PROPOSED
OVERHEAD POWER	OP	PEDESTRIAN RAILING
TELEPHONE	T	
WATER	W	
STORM DRAIN	SD	
MAJOR CONTOUR		
MINOR CONTOUR		

DATUM
NAVD 1988

DAVID EVANS AND ASSOCIATES INC.
415 - 118th Avenue SE
Bellevue Washington 98005-3518
Phone: 425.519.6500

P.C. GIRDERS (W35DG)
LOADING: HL-93
PEDESTRIAN LOADING: 75PSF

95% SUBMITTAL

NO.	DATE	DESCRIPTION	BY

DOGWOOD ST. BRIDGE REPLACEMENT

DRAWN EMB | DSGN. MCF | CHKD. JP

CITY OF ISSAQUAH

BRIDGE PLAN AND ELEVATION

DATE: APRIL 2014 | JOB # BRM-1408(002) | SCALE: AS NOTED

oxo 04/21/14 5:50pm - \\bhfs1\project1\VS\Y00000002\0400CAD\EB\SHEETS\EB-PE-X-ISSY0002-LAYOUT.dwg

GENERAL NOTES:

1. ALL MATERIALS AND WORKMANSHIP SHALL BE IN ACCORDANCE WITH THE REQUIREMENTS OF THE WASHINGTON STATE DEPARTMENT OF TRANSPORTATION "STANDARD SPECIFICATIONS FOR ROADS, BRIDGES, AND MUNICIPAL CONSTRUCTION", ENGLISH UNITS, DATED 2014 AND AMENDMENTS.

2. THIS STRUCTURE HAS BEEN DESIGNED IN ACCORDANCE WITH THE REQUIREMENTS OF THE "AASHTO LRFD BRIDGE DESIGN SPECIFICATIONS", SIXTH EDITION 2012. DEAD LOAD INCLUDES ADDITIONAL FUTURE WEARING SURFACE OF 25 POUNDS PER SQUARE FOOT.

3. THE SEISMIC DESIGN OF THIS STRUCTURE HAS BEEN COMPLETED IN ACCORDANCE WITH THE REQUIREMENTS OF THE "AASHTO GUIDE SPECIFICATIONS FOR LRFD SEISMIC BRIDGE DESIGN" SECOND EDITION 2011, WITH 2012 INTERIM REVISIONS, USING SEISMIC DESIGN CATEGORY D, SITE CLASS D, A PEAK GROUND ACCELERATION 0.44, AND 0.2 SECOND AND 1.0 SECOND SPECTRAL ACCELERATION OF 0.90 AND 0.30, RESPECTIVELY, ON SITE CLASS B.

4. THE CONCRETE IN APPROACH SLABS SHALL BE CLASS 4000A. ALL OTHER CAST-IN-PLACE CONCRETE SHALL BE CLASS 4000.

5. REINFORCING BARS SHALL CONFORM TO ASTM A706 GRADE 60 UNLESS OTHERWISE NOTED.

6. THE LOCATIONS OF ALL EXISTING UTILITIES WITHIN THE VICINITY OF THE STRUCTURE SHALL BE VERIFIED BY THE CONTRACTOR PRIOR TO EXCAVATION.

7. UNLESS OTHERWISE SHOWN ON THE PLANS, THE CONCRETE COVER MEASURED FROM THE FACE OF THE CONCRETE TO THE FACE OF ANY REINFORCEMENT BAR SHALL BE 2" AT ABUTMENT WALLS AND WINGWALLS, 3" WHEN PLACED AGAINST SOIL, AND 1 1/2" AT ALL OTHER LOCATIONS.

8. UNLESS OTHERWISE SHOWN ON PLANS, ALL EXTERIOR CORNERS AND EDGES SHALL HAVE A 3/4" CHAMFER AND ALL INTERIOR CORNERS SHALL HAVE A 3/4" FILLET.

9. UNLESS NOTED OTHERWISE, MINIMUM LAP SPLICE LENGTHS SHALL BE AS FOLLOWS:

	OTHER	TOP BARS
#4 BAR =	2'-0"	2'-0"
#5 BAR =	2'-0"	2'-4"
#6 BAR =	2'-0"	2'-9"
#7 BAR =	2'-6"	3'-6"
#8 BAR =	3'-3"	4'-7"
#9 BAR =	4'-2"	5'-9"

10. THE NOMINAL PILE AXIAL RESISTANCE NOT INCLUDING SCOUR EFFECTS SHALL BE TAKEN AS FOLLOWS (IN KIPS):

STRENGTH LIMIT STATE	
PIER NO.	COMPRESSIVE RESISTANCE
1 & 2	430

EXTREME EVENT LIMIT STATE	
PIER NO.	COMPRESSIVE RESISTANCE
1 & 2	366

SERVICE LIMIT STATE	
PIER NO.	COMPRESSIVE RESISTANCE
1 & 2	256

LEGEND

A / 5 — IDENTIFIES SECTION, VIEW, OR DETAIL; SHOWN ON SHEET 5

A / — SHOWN ON CURRENT SHEET

E — EPOXY COATED BAR

TEST HOLE

95% SUBMITTAL

DAVID EVANS AND ASSOCIATES INC.
415 - 118th Avenue SE
Bellevue Washington 98005-3518
Phone: 425.519.6500

NO.	DATE	DESCRIPTION	BY

DOGWOOD ST. BRIDGE REPLACEMENT

DRAWN EMB | DSGN. HAC | CHKD. MCF

CITY OF ISSAQUAH

GENERAL NOTES

DATE: APRIL 2014 | JOB # BRM-1408(002) | SCALE: AS NOTED

oxa 04/21/14 5:50pm - \\bivfs1\project\V\SSY00000002\0400CAD\EB\SHEETS\EB-GN-X-ISSY0002.dwg

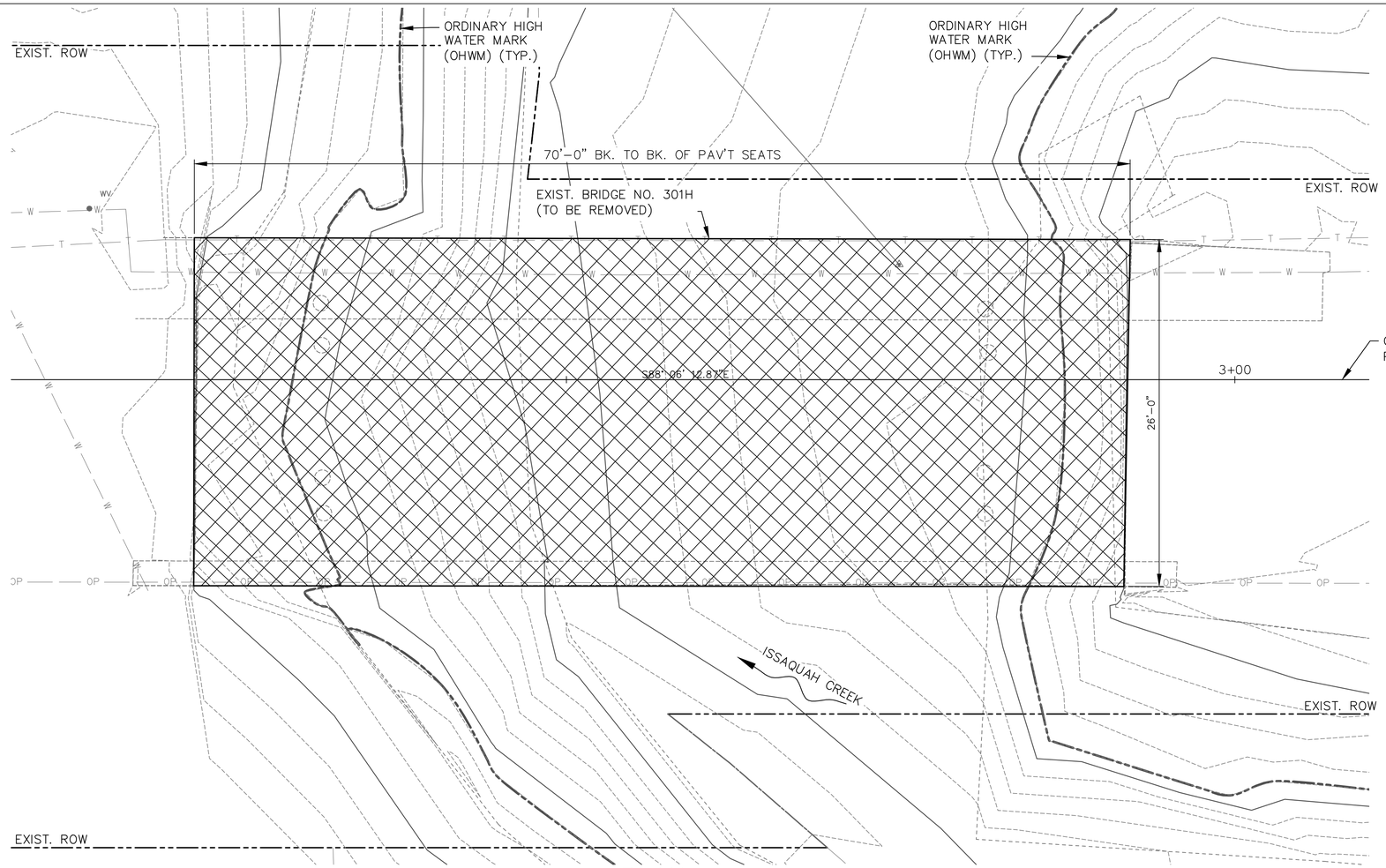

PLAN

NOTES:

1. CONTRACTOR SHALL SUBMIT DEMOLITION PLAN IN ACCORDANCE WITH THE SPECIAL PROVISIONS BEFORE STARTING DEMOLITION WORK.
2. TEMP. WORK ACCESS STRUCTURE SHOWN IS CONCEPTUAL.
3. WORK ACCESS/PROTECTIVE SCREENING SHALL CONTAIN ALL DEBRIS AND PREVENT IT FROM FALLING INTO CREEK DURING BRIDGE REMOVAL.

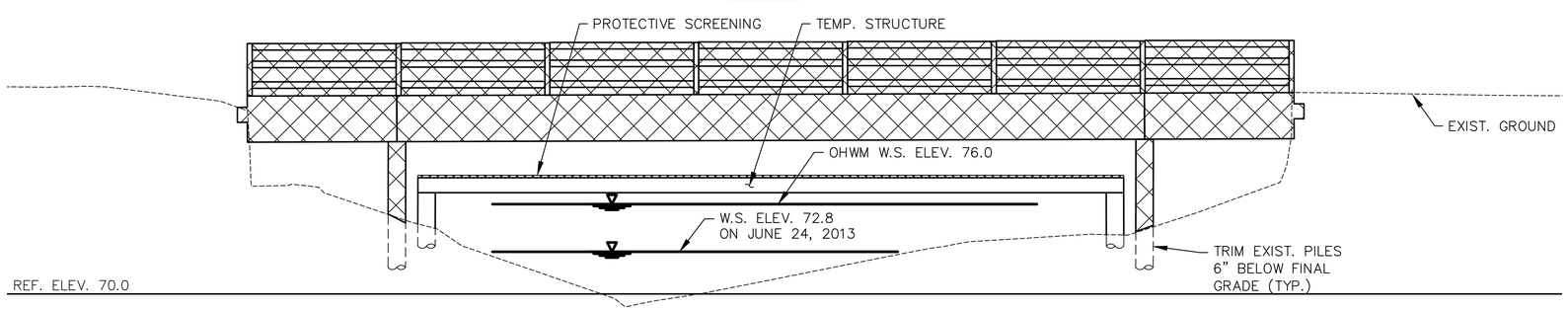

ELEVATION

95% SUBMITTAL

DAVID EVANS AND ASSOCIATES INC.
415 - 118th Avenue SE
Bellevue Washington 98005-3518
Phone: 425.519.6500

NO.	DATE	DESCRIPTION	BY

DRAWN EMB | DSGN. HAC | CHKD. MCF

DOGWOOD ST. BRIDGE REPLACEMENT

CITY OF ISSAQUAH

EXISTING BRIDGE REMOVAL CONCEPT

DATE: APRIL 2014 | JOB # BRM-1408(002) | SCALE: AS NOTED

SHEET 22 OF 68

04/21/14 5:50pm \\evfs1\project\\SSY00000002\04000CAD\EB\SHEETS\EB-DM-X-ISSY0002.dwg

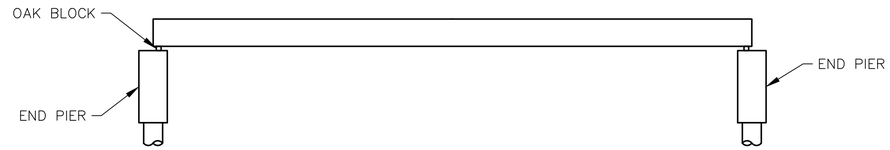

STAGE 1
SET GIRDERS IN PLACE

INSTALL TEMPORARY BRACING FOR ERECTION IN ACCORDANCE WITH STD. SPEC. SECTION 6-02.3(17)F.

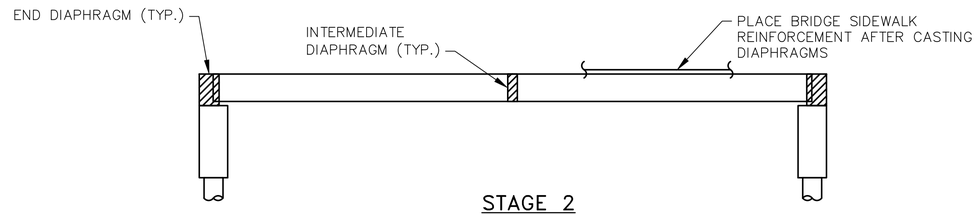

STAGE 2
CAST DIAPHRAGMS AND PLACE
BRIDGE SIDEWALK REINFORCEMENT

INSTALL TEMPORARY BRACING FOR DIAPHRAGM IN ACCORDANCE WITH STD. SPEC. SECTION 6-02.3(17)F.
DO NOT BACKFILL AT END PIERS UNTIL DIAPHRAGM CONCRETE COMPRESSIVE STRENGTH HAS REACHED 3000 PSI.

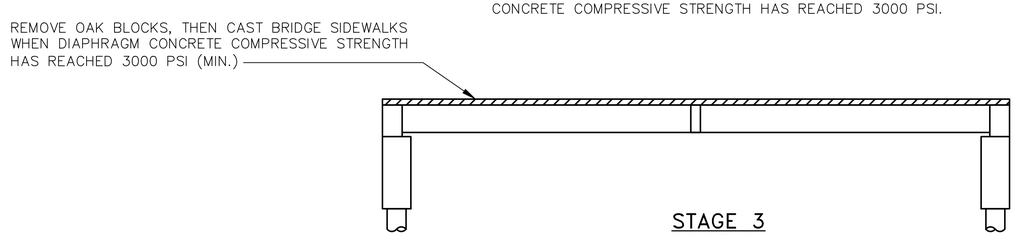

STAGE 3
CAST BRIDGE SIDEWALK
CONSTRUCT WALL #4

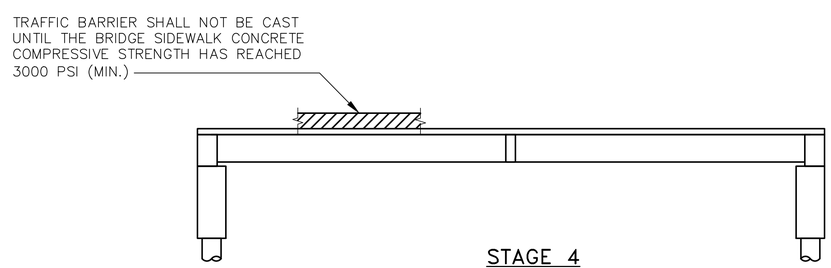

STAGE 4
CAST TRAFFIC BARRIERS
& PLACE HMA

DAVID EVANS AND ASSOCIATES INC.
415 - 118th Avenue SE
Bellevue Washington 98005-3518
Phone: 425.519.6500

CONSTRUCTION SEQUENCE – SUPERSTRUCTURE

95% SUBMITTAL

NO.	DATE	DESCRIPTION	BY

DOGWOOD ST. BRIDGE REPLACEMENT

DRAWN EMB | DSGN. HAC | CHKD. MCF

CITY OF ISSAQUAH

CONSTRUCTION SEQUENCE

DATE: APRIL 2014 | JOB # BRM-1408(002) | SCALE: AS NOTED

oxd 04/21/14 5:50pm – \\bivfs1\project1\ISSY00000002\04000CAD\EB\SHEETS\EB-CS-X-ISSY0002.dwg

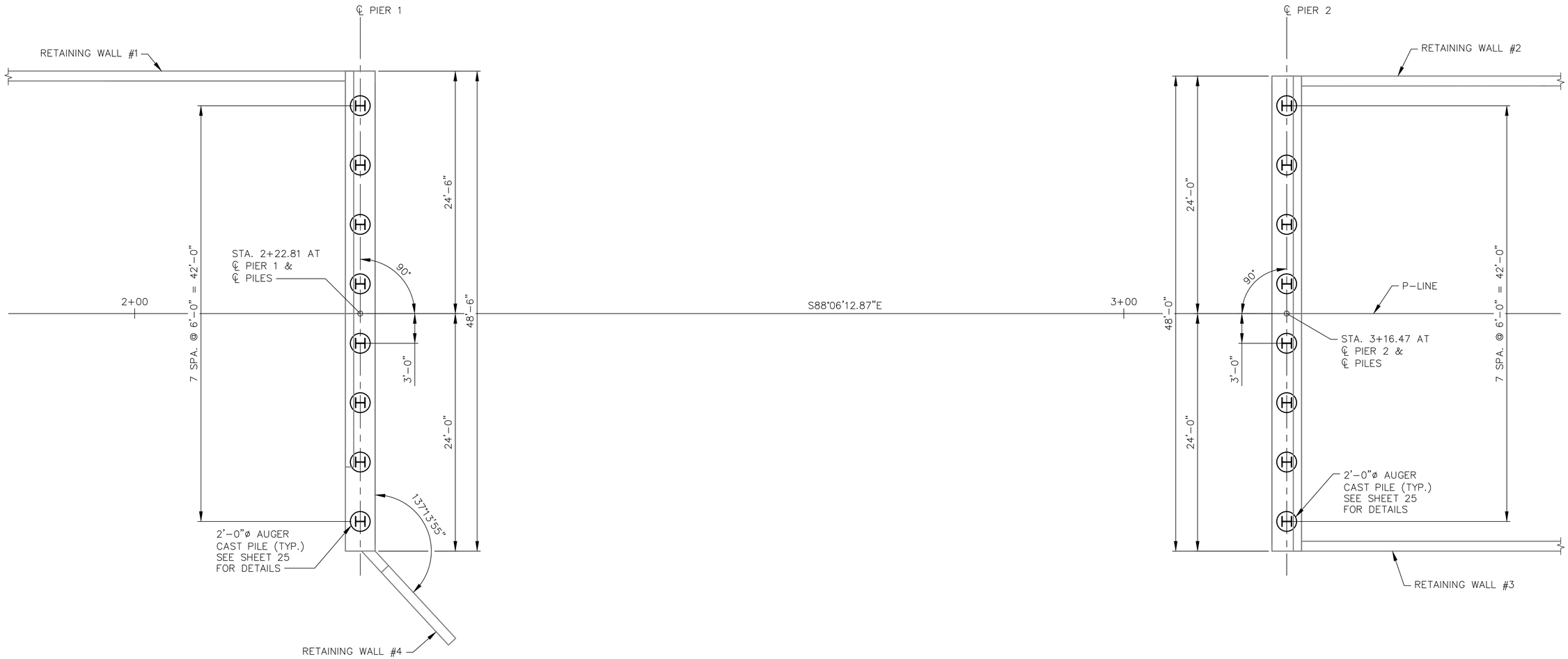

FOUNDATION PLAN

BEARING OF ALL PIERS = N1°53'47.13"E

95% SUBMITTAL

DAVID EVANS AND ASSOCIATES INC.
415 - 118th Avenue SE
Bellevue Washington 98005-3518
Phone: 425.519.6500

NO.	DATE	DESCRIPTION	BY

DOGWOOD ST. BRIDGE REPLACEMENT

CITY OF ISSAQUAH

DRAWN EMB | DSGN. HAC | CHKD. MCF

FOUNDATION PLAN

DATE: APRIL 2014 | JOB # BRM-1408(002) | SCALE: AS NOTED

SHEET 24 OF 68

04/21/14 5:50pm – \\bivfs1\project1\ISSY00000002\04DCAD\EB\SHEETS\EB-FD-X-ISSY0002.dwg

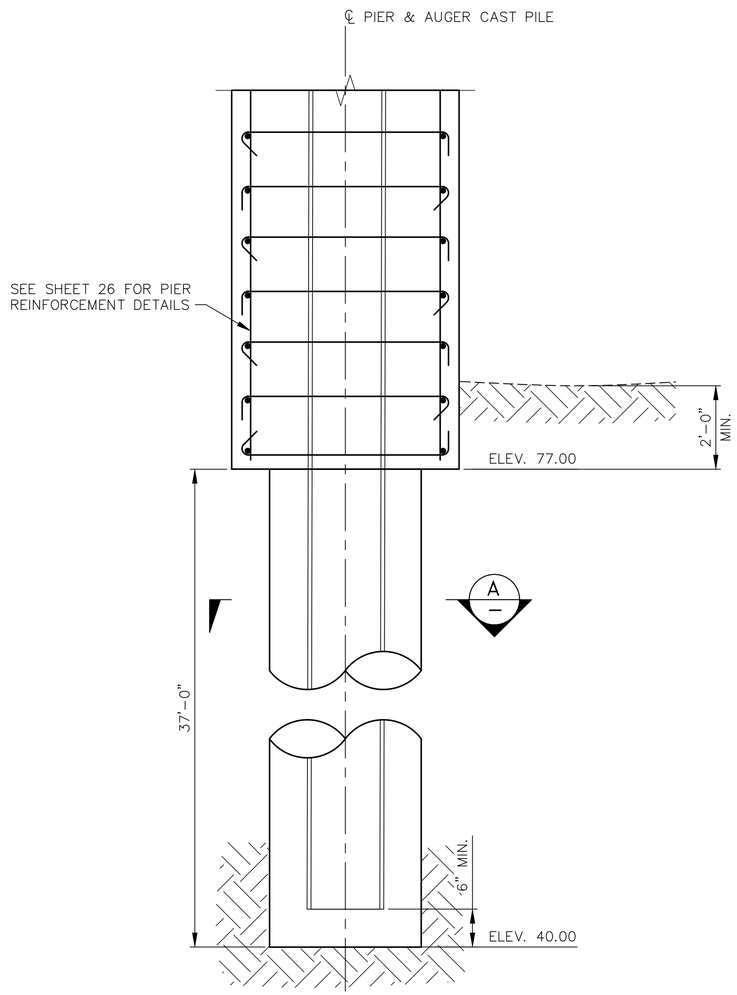

AUGER CAST PILE DETAIL

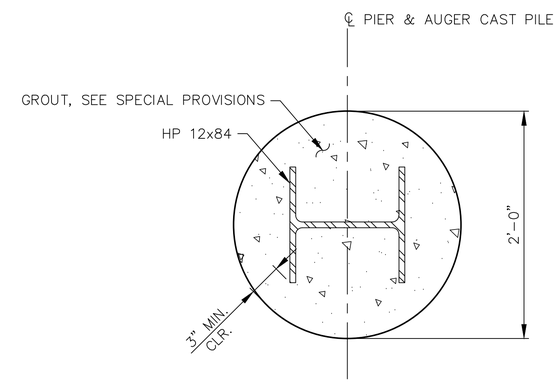

SECTION A

NOTES:

1. ORIENT THE H-PILE WEBS PERPENDICULAR TO THE CENTERLINE OF PIER.
2. ALL STEEL PILES SHALL CONFORM TO ASTM A572 GRADE 50.
3. PILE CAPACITY WILL BE DETERMINED BY THE ENGINEER. ALL PILE INSTALLATION SHALL BE CONDUCTED IN THE PRESENCE OF THE ENGINEER.

95% SUBMITTAL

DAVID EVANS AND ASSOCIATES INC.
415 - 118th Avenue SE
Bellevue Washington 98005-3518
Phone: 425.519.6500

NO.	DATE	DESCRIPTION	BY

DRAWN EMB | DSGN. HAC | CHKD. MCF

DOGWOOD ST. BRIDGE REPLACEMENT

CITY OF ISSAQUAH

FOUNDATION DETAILS

DATE: APRIL 2014 | JOB # BRM-1408(002) | SCALE: AS NOTED

04/21/14 5:50pm - \\bivfs1\project\V\ISSY00000002\04000CAD\EB\SHEETS\EB-FD-X-ISSY0002-02.dwg

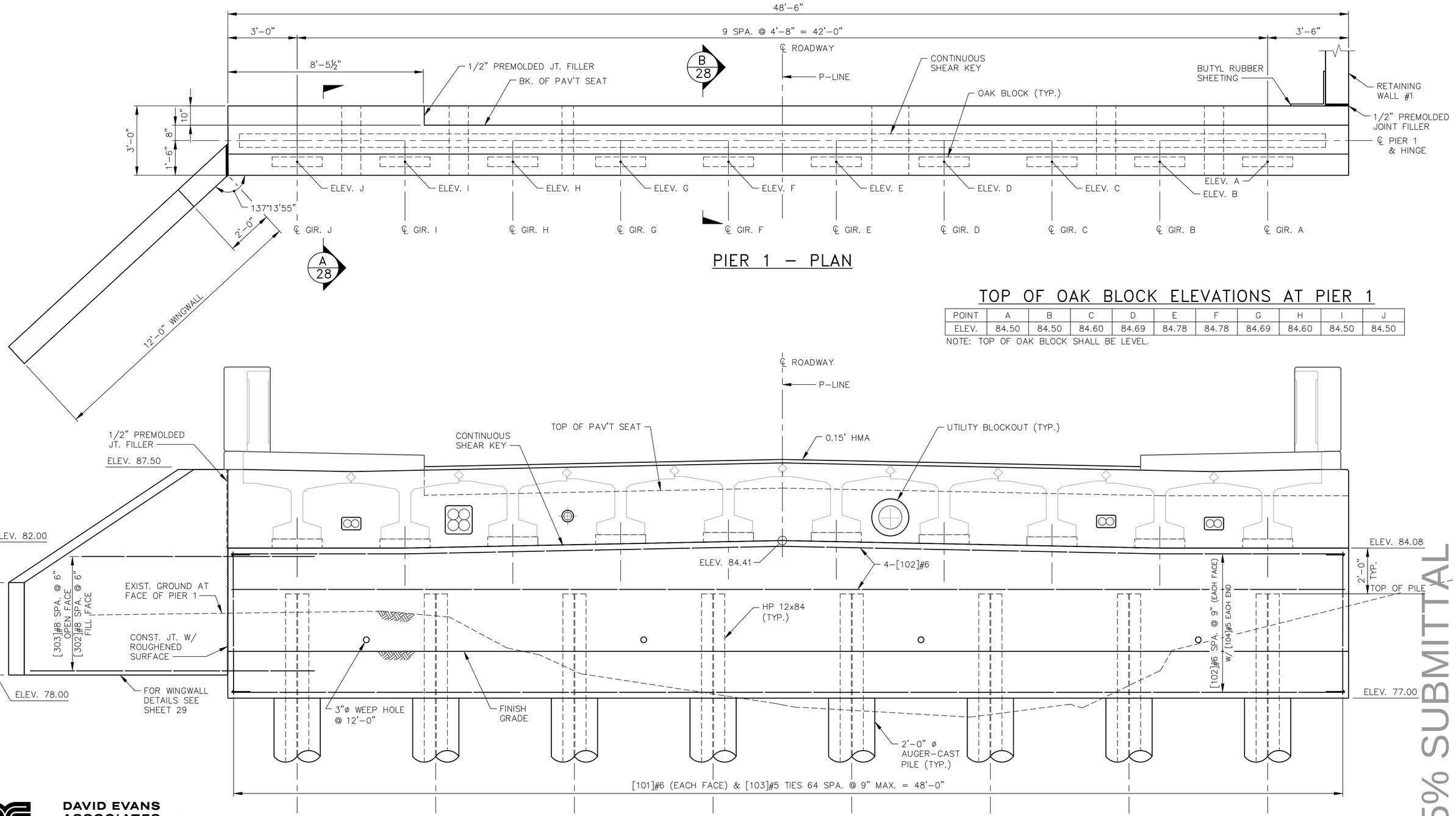

PIER 1 – PLAN

TOP OF OAK BLOCK ELEVATIONS AT PIER 1

POINT	A	B	C	D	E	F	G	H	I	J
ELEV.	84.50	84.50	84.60	84.69	84.78	84.78	84.69	84.60	84.50	84.50

NOTE: TOP OF OAK BLOCK SHALL BE LEVEL.

PIER 1 – ELEVATION

(LOOKING BACK ON STATION)

95% SUBMITTAL

DAVID EVANS AND ASSOCIATES INC.
415 - 118th Avenue SE
Bellevue Washington 98005-3518
Phone: 425.519.6500

NO.	DATE	DESCRIPTION	BY

DRAWN EMB | DSGN. HAC | CHKD. MCF

DOGWOOD ST. BRIDGE REPLACEMENT

CITY OF ISSAQUAH

PIER 1 PLAN AND ELEVATION

DATE: APRIL 2014 | JOB # BRM-1408(002) | SCALE: AS NOTED

04/21/14 5:50pm – \\bivfs1\project\V\VSSY00000002\04000CAD\EB\SHEETS\EB-P1-X-ISSY0002.dwg

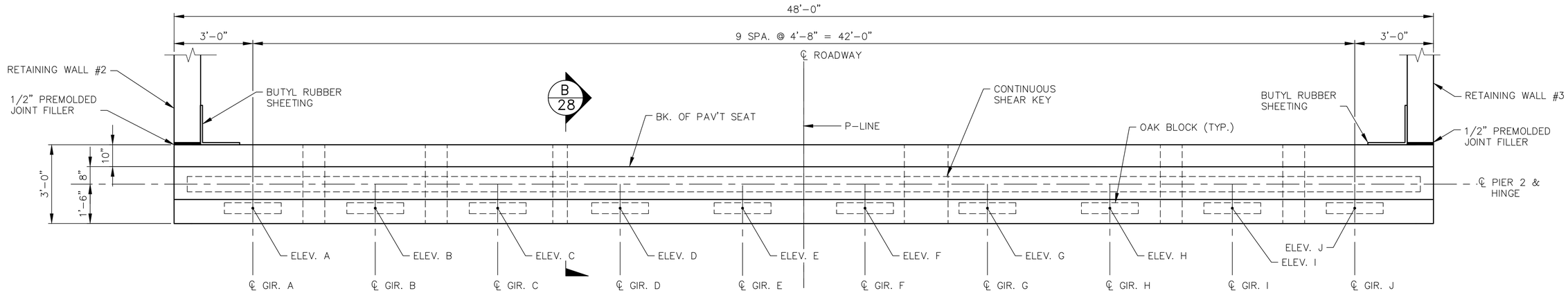

PIER 2 – PLAN

TOP OF OAK BLOCK ELEVATIONS AT PIER 2

POINT	A	B	C	D	E	F	G	H	I	J
ELEV.	84.57	84.57	84.66	84.76	84.85	84.85	84.76	84.66	84.57	84.57

NOTE: TOP OF OAK BLOCK SHALL BE LEVEL.

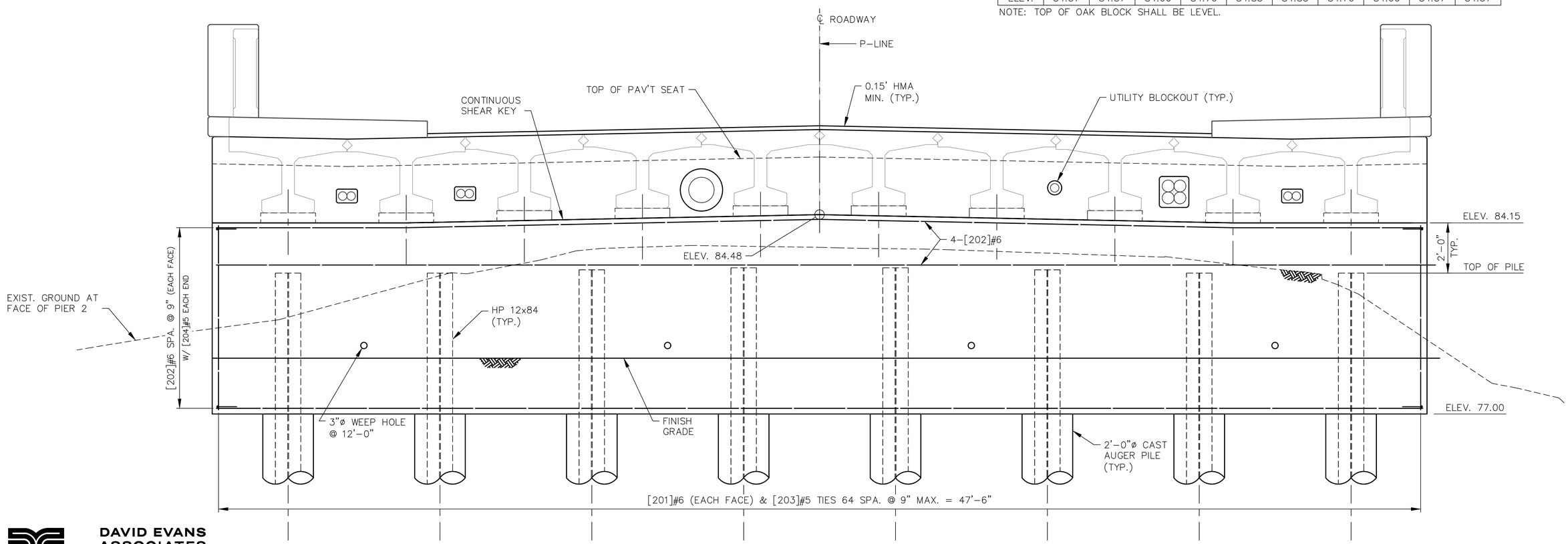

PIER 2 – ELEVATION

(LOOKING AHEAD ON STATION)

95% SUBMITTAL

DAVID EVANS AND ASSOCIATES INC.
415 - 118th Avenue SE
Bellevue Washington 98005-3518
Phone: 425.519.6500

NO.	DATE	DESCRIPTION	BY

DOGWOOD ST. BRIDGE REPLACEMENT

DRAWN EMB | DSGN. HAC | CHKD. MCF

CITY OF ISSAQUAH

PIER 2 PLAN AND ELEVATION

DATE: APRIL 2014 | JOB # BRM-1408(002) | SCALE: AS NOTED

dwg 04/21/14 5:50pm – \\bivfs1\project\V\VSSY00000002\04000CAD\EB\SHEETS\EB-P2-X-ISSY0002.dwg

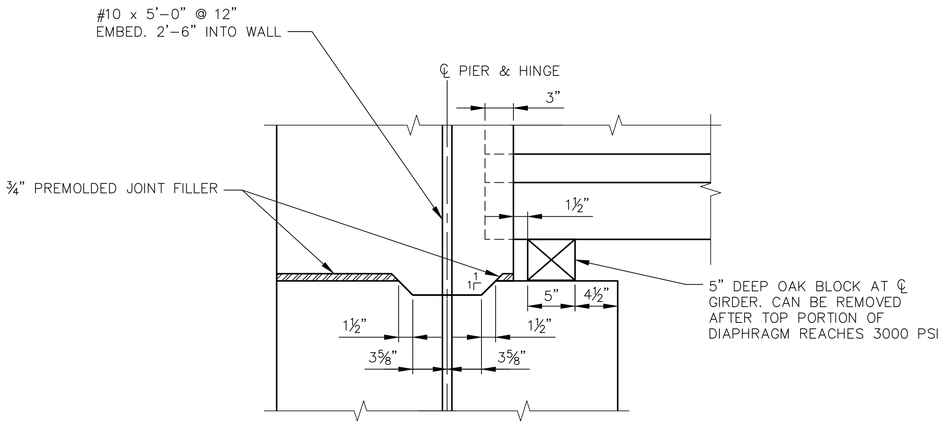

DETAIL 1/–

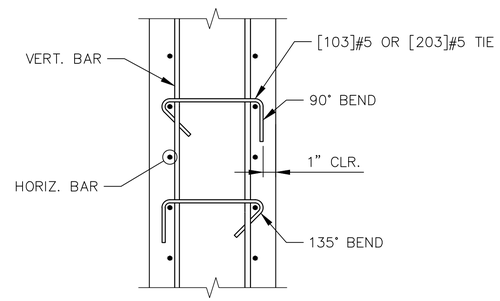

TIE BAR DETAIL

ALTERNATE 135° HOOK
EVERY OTHER TIE BAR

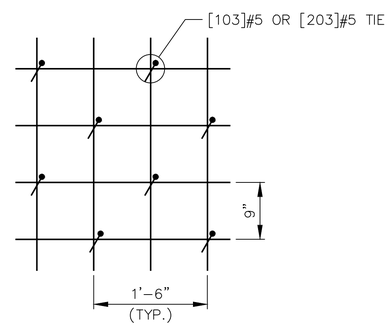

TIE BAR SPACING DETAIL

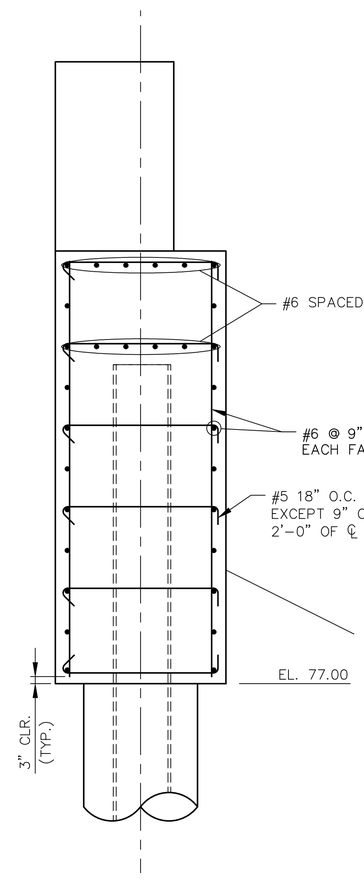

VIEW A/26

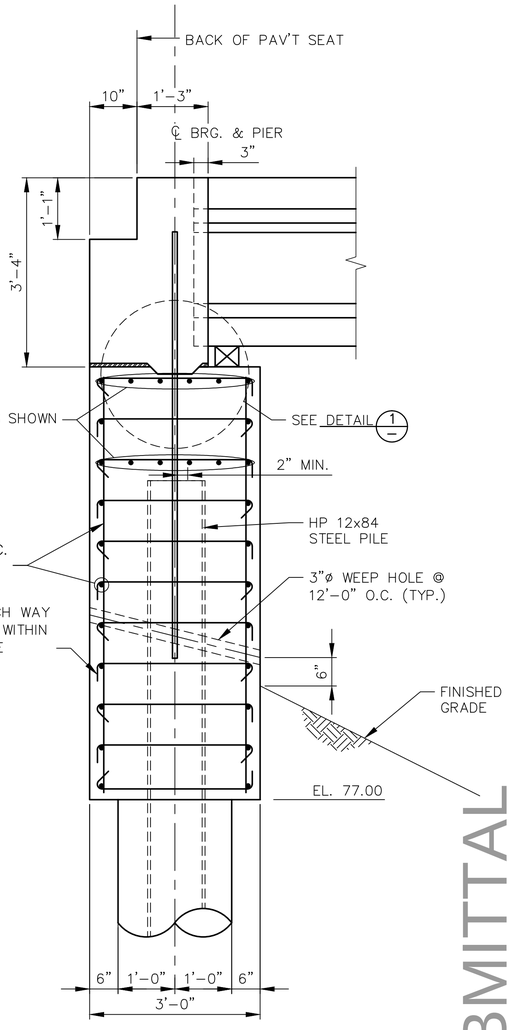

SECTION B/26

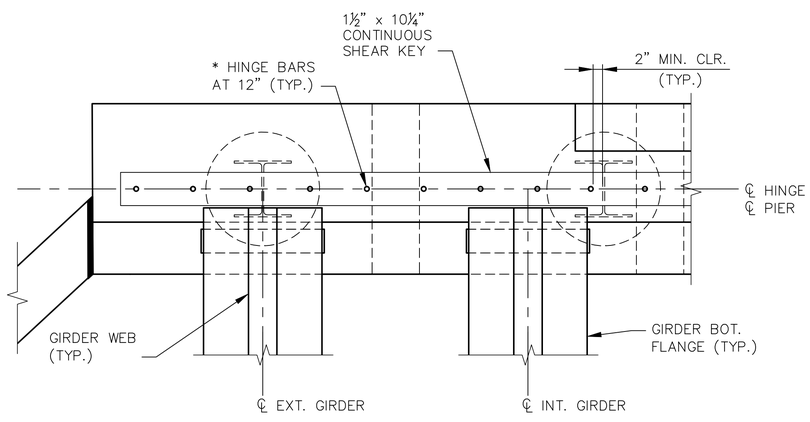

HINGE BAR PLAN

* PLACE BARS TO AVOID INTERFERENCE WITH REINFORCING PROTRUDING FROM GIRDERS, UTILITY BLOCKOUTS, AND STEEL PILES.

95% SUBMITTAL

DAVID EVANS AND ASSOCIATES INC.
415 - 118th Avenue SE
Bellevue Washington 98005-3518
Phone: 425.519.6500

NO.	DATE	DESCRIPTION	BY

DRAWN EMB | DSGN. HAC | CHKD. MCF

DOGWOOD ST. BRIDGE REPLACEMENT

CITY OF ISSAQUAH

PIER 1 AND 2 DETAILS

DATE: APRIL 2014 | JOB # BRM-1408(002) | SCALE: AS NOTED

SHEET 28 OF 68

04/21/14 5:50pm – \\bvfs1\project1\ISSY00000002\04000CAD\EB\SHEETS\EB-P1-X-ISSY0002-DETAILS1.dwg

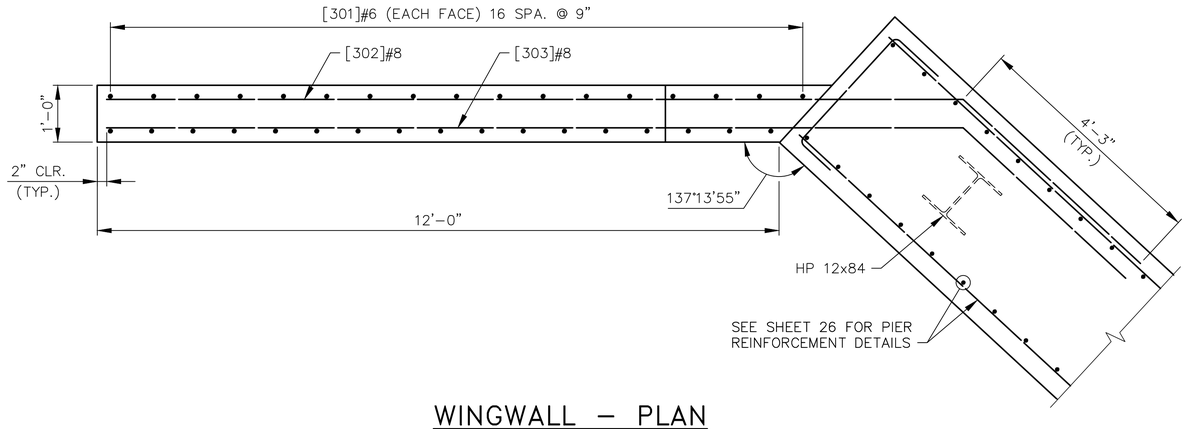

WINGWALL – PLAN

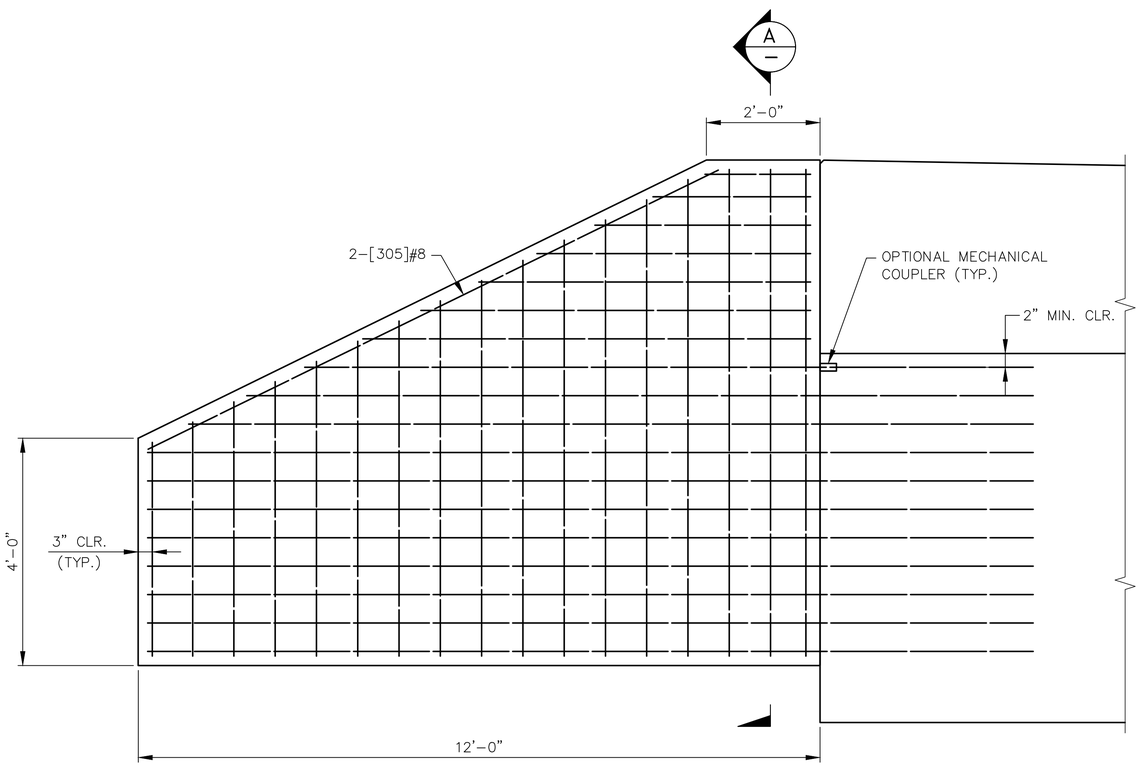

WINGWALL – ELEVATION

NOTE:
PIER WALL REINFORCEMENT NOT SHOWN FOR CLARITY.

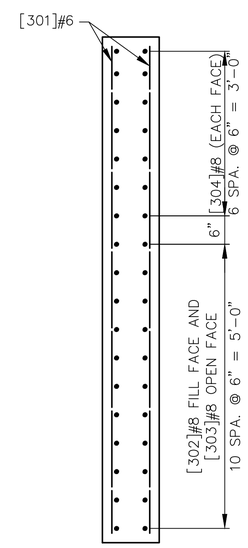

SECTION A –

DAVID EVANS AND ASSOCIATES INC.
415 - 118th Avenue SE
Bellevue Washington 98005-3518
Phone: 425.519.6500

95% SUBMITTAL

NO.	DATE	DESCRIPTION	BY

DOGWOOD ST. BRIDGE REPLACEMENT

DRAWN EMB | DSGN. HAC | CHKD. MCF

CITY OF ISSAQUAH

WINGWALL DETAILS

DATE: APRIL 2014 | JOB # BRM-1408(002) | SCALE: AS NOTED

SHEET 29 OF 68

oxo 04/21/14 5:50pm – \\bivist\project\V\ISY000000002\0400CAD\EB\SHEETS\EB-WW-X-ISSY0002.dwg

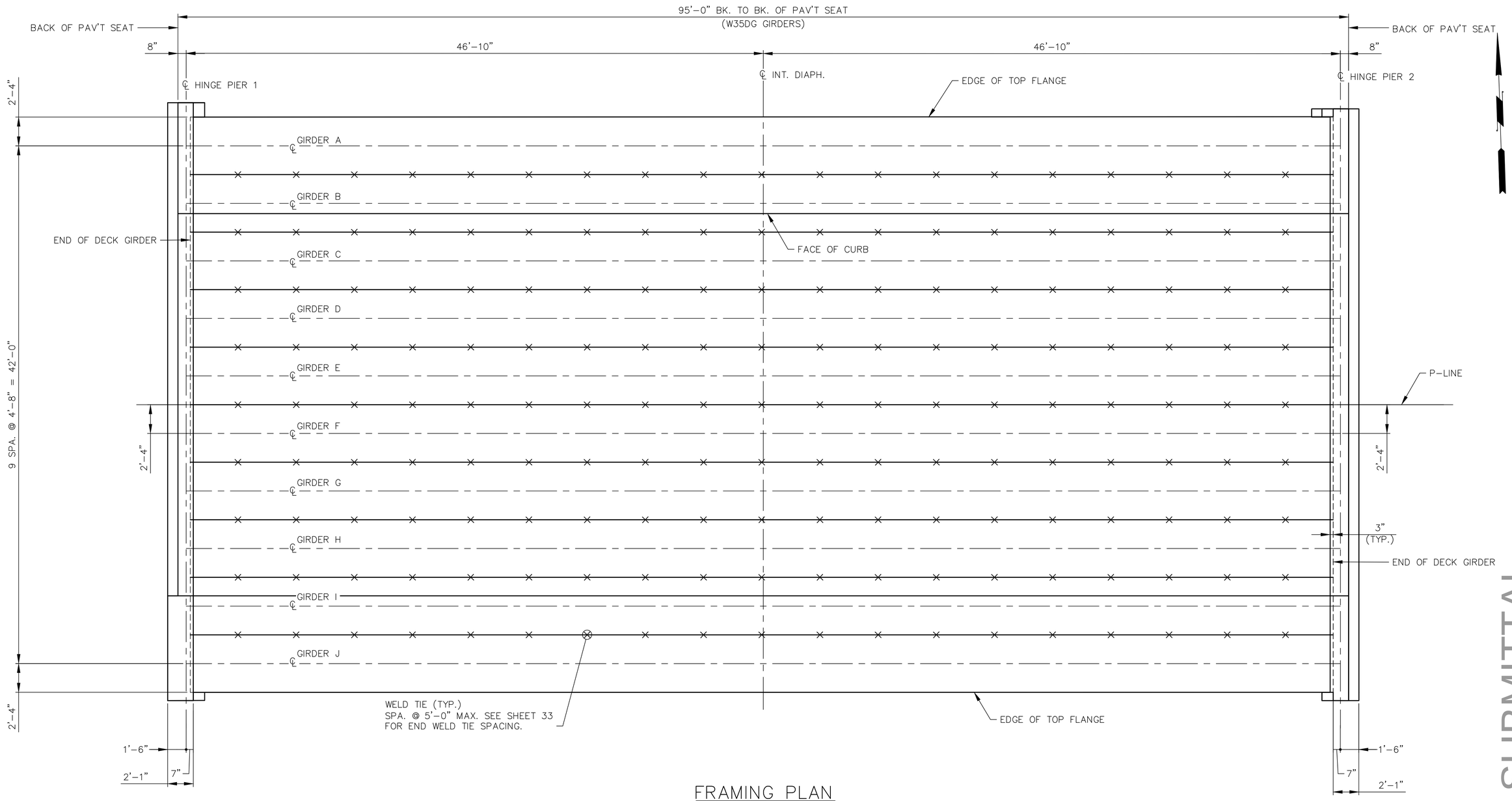

FRAMING PLAN

ALL DIMENSIONS ARE NORMAL OR PARALLEL
TO P-LINE UNLESS OTHERWISE SHOWN.
BEARING OF ALL PIERS NORMAL TO P-LINE

95% SUBMITTAL

DAVID EVANS AND ASSOCIATES INC.
415 - 118th Avenue SE
Bellevue Washington 98005-3518
Phone: 425.519.6500

NO.	DATE	DESCRIPTION	BY

DRAWN EMB | DSGN. MCF | CHKD. JP

DOGWOOD ST. BRIDGE REPLACEMENT

CITY OF ISSAQUAH

FRAMING PLAN

DATE: APRIL 2014 | JOB # BRM-1408(002) | SCALE: AS NOTED

SHEET 30 OF 68

\\blvfs1\project\V\ISSY00000002\04000CAD\EB\SHEETS\EB-FP-X-ISSY0002.dwg
04/21/14 5:50pm

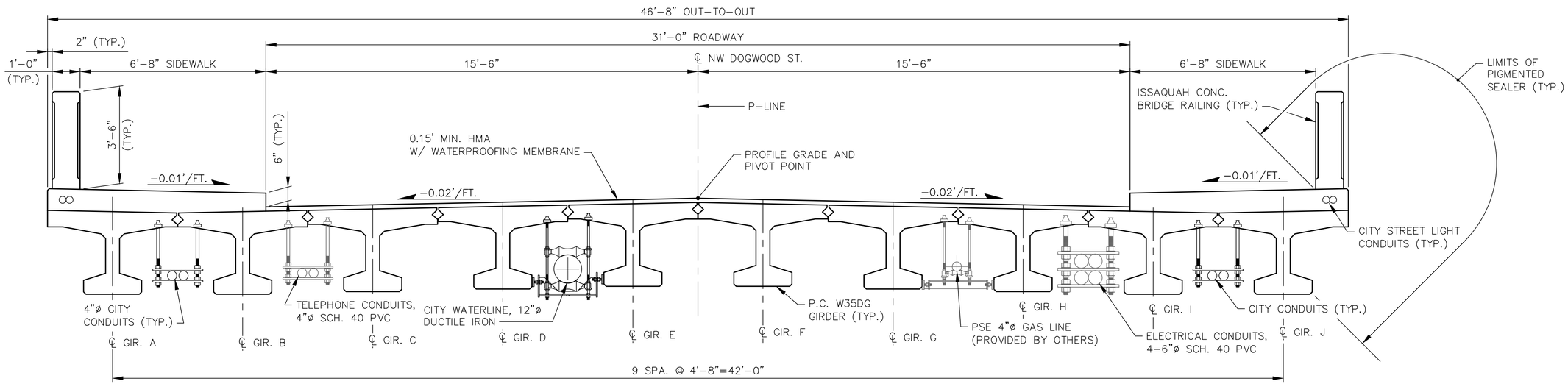

BRIDGE TYPICAL SECTION

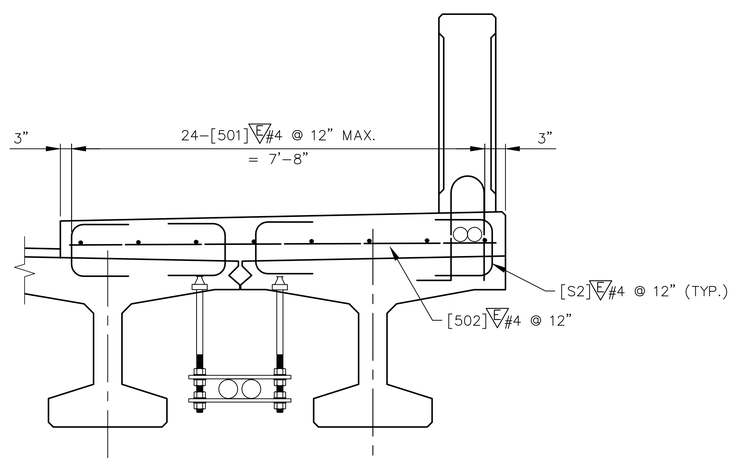

SIDEWALK REINFORCEMENT DETAIL

NOTES:

1. THE TOP FLAGES OF GIRDERS B THRU I SHALL SLOPE UP AT 2% TOWARD THE P-LINE. THE TOP FLANGE OF GIRDERS A AND J SHALL SLOPE DOWN AT 2% TOWARD THE P-LINE. ALL GIRDERS SHALL HAVE A MINUMUM FLANGE THICKNESS OF 6".

95% SUBMITTAL

DAVID EVANS AND ASSOCIATES INC.
415 - 118th Avenue SE
Bellevue Washington 98005-3518
Phone: 425.519.6500

NO.	DATE	DESCRIPTION	BY

DOGWOOD ST. BRIDGE REPLACEMENT

DRAWN EMB | DSGN. MCF | CHKD. JP

CITY OF ISSAQUAH

TYPICAL SECTION

DATE: APRIL 2014 | JOB # BRM-1408(002) | SCALE: AS NOTED

SHEET 31 OF 68

oxo 04/21/14 5:50pm - \\blvds1\project\V:\ISS100000002\0400CAD\EB\SHEETS\EB-T1-X-ISS10002.dwg

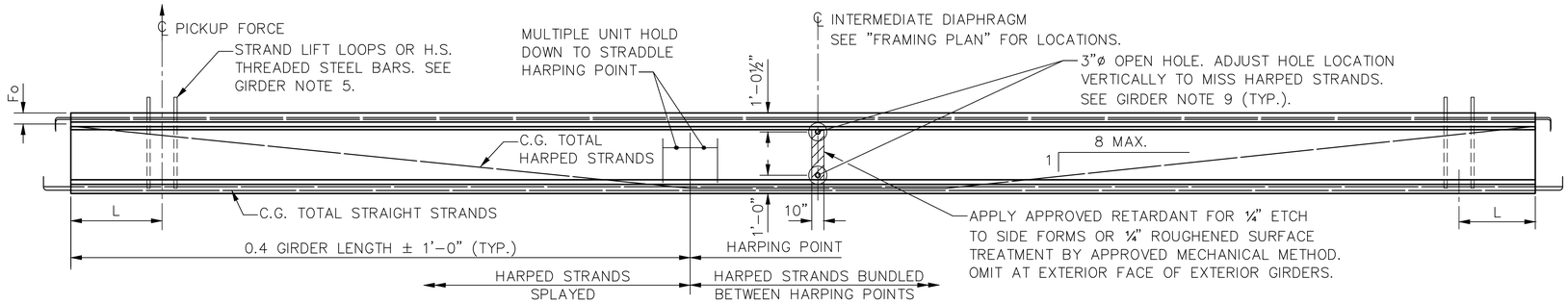

END TYPE C

GIRDER ELEVATION

END TYPE C

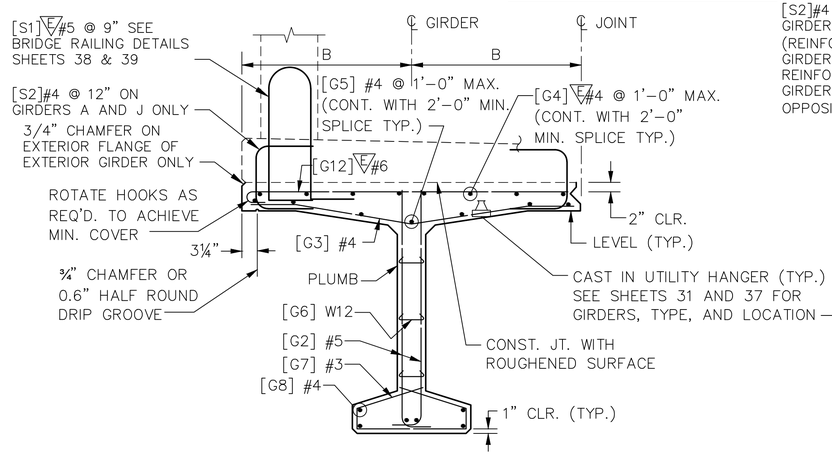

SECTION A

EXT. GIRDER SHOWN
INT. GIRDER SIMILAR

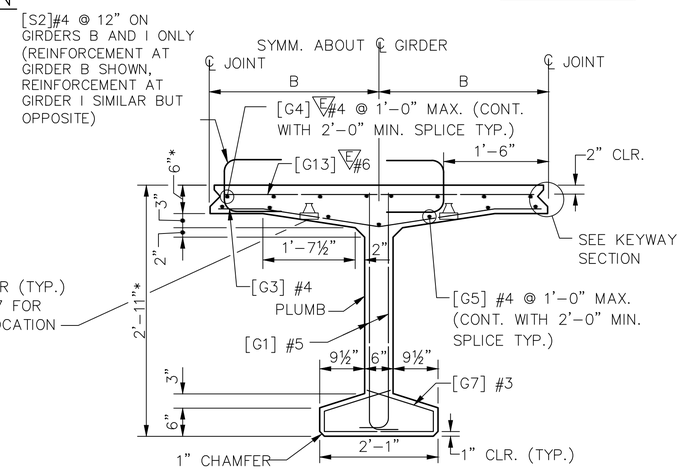

SECTION B

INT. GIRDER SHOWN
EXT. GIRDER SHOWN
EXT. GIRDER SIMILAR

* THICKEN FLANGE TO COMPENSATE FOR SUPER ELEVATION.

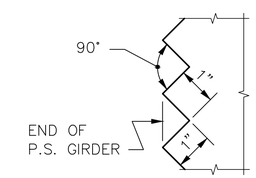

SAWTEETH DETAILS

SAWTEETH ARE FULL WIDTH

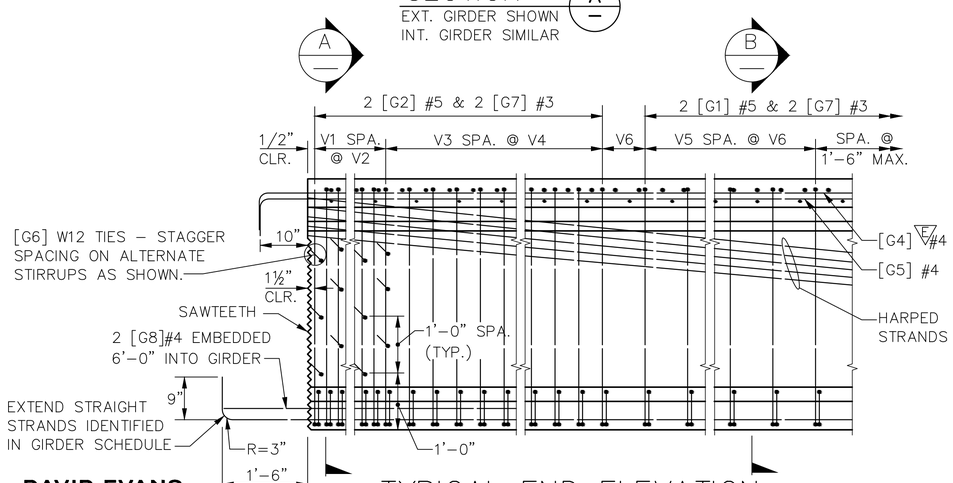

TYPICAL END ELEVATION

BARRIER REINFORCEMENT NOT SHOWN FOR CLARITY

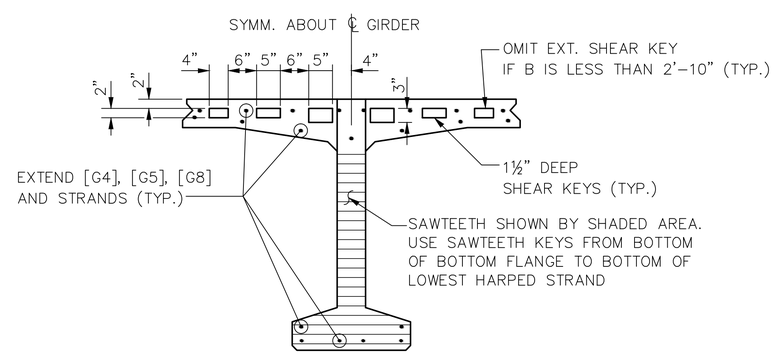

GIRDER END

BENDING DIAGRAM (ALL DIMENSIONS ARE OUT TO OUT)

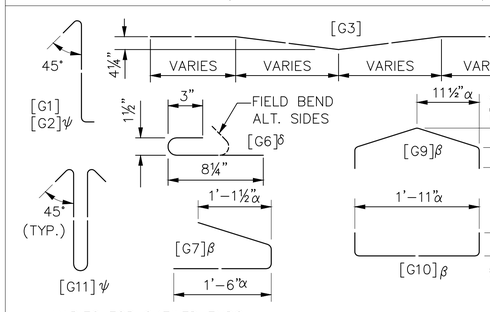

α – VARIES FOR SKEWED ENDS.
δ – #3 OR #4 MAY BE SUBSTITUTED. FIELD BENDING IS OPTIONAL.
β – PAIRS OF [G7] BARS, OR [G9] AND [G10] BARS, MAY BE USED INTERCHANGEABLY AS BOTTOM FLANGE TIES.
ψ – 1 [G11] MAY BE SUBSTITUTED FOR 2 [G2] WITHIN THE V1 SPA. @ V2.

95% SUBMITTAL

DAVID EVANS AND ASSOCIATES INC.
415 - 118th Avenue SE
Bellevue Washington 98005-3518
Phone: 425.519.6500

NO.	DATE	DESCRIPTION	BY

DRAWN EMB | DSGN. MCF | CHKD. JP

DOGWOOD ST. BRIDGE REPLACEMENT

CITY OF ISSAQUAH

GIRDER DETAILS 1

DATE: APRIL 2014 | JOB # BRM-1408(002) | SCALE: AS NOTED

SHEET 32 OF 68

oxa 04/21/14 5:51pm – \\bivis1\project1\ISSY00000002\0400CAD\EB\SHEETS\EB-GD-X-ISSY0002-01.dwg

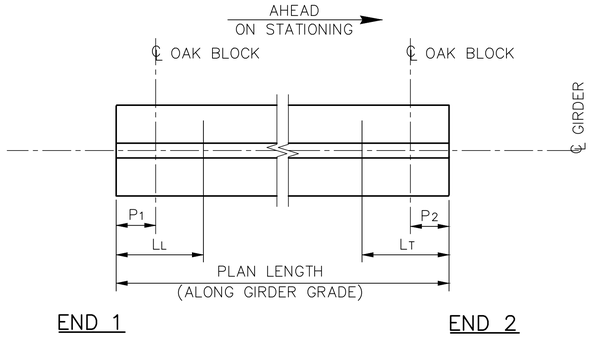

GIRDER SCHEDULE LEGEND

LL AND LT ARE SHIPPING SUPPORT LOCATIONS
AT LEADING AND TRAILING ENDS, RESPECTIVELY.

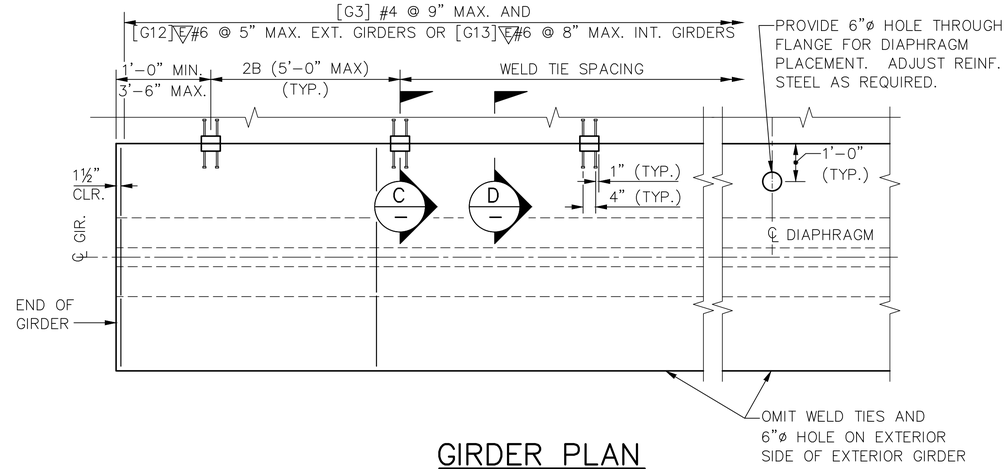

GIRDER PLAN

OTHER REINFORCEMENT NOT SHOWN FOR CLARITY.

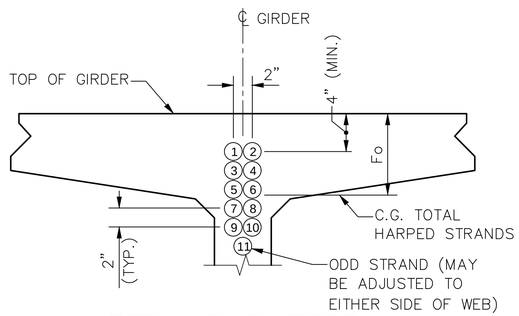

STRAND PATTERN AT GIRDER END

HARPED STRAND LOCATION SEQUENCE
SHALL BE AS SHOWN (1), (2) ETC.

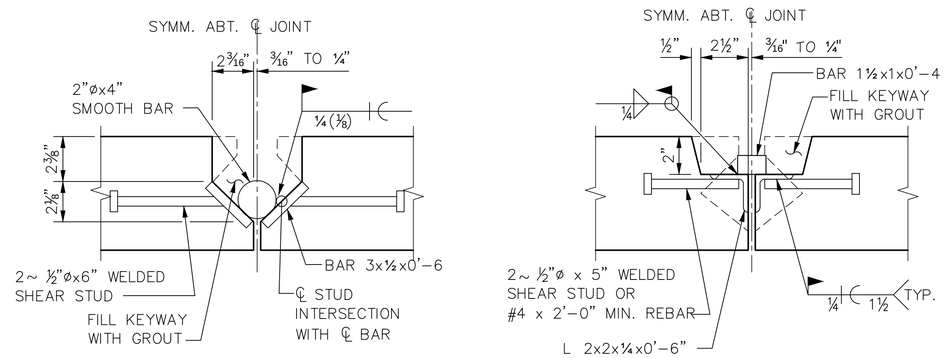

SECTION C — WELD TIE

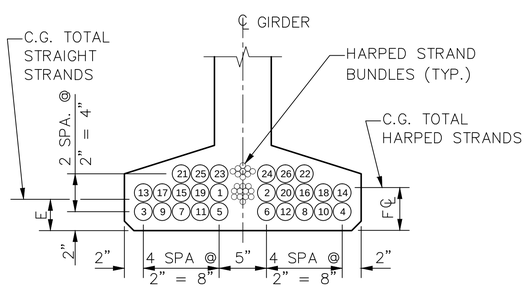

STRAND PATTERN AT CENTER SPAN

STRAIGHT STRAND LOCATION SEQUENCE
SHALL BE AS SHOWN (1), (2) ETC.

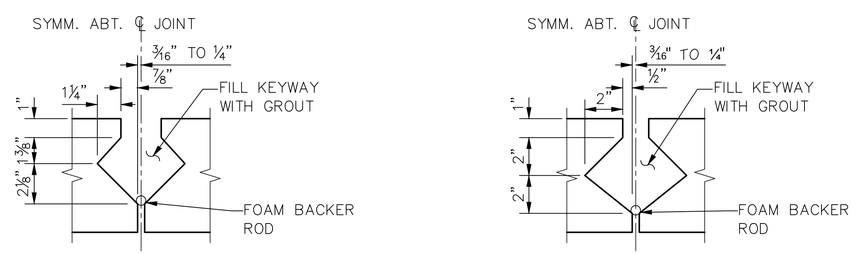

SECTION D — KEYWAY

DAVID EVANS AND ASSOCIATES INC.
415 - 118th Avenue SE
Bellevue Washington 98005-3518
Phone: 425.519.6500

95% SUBMITTAL

NO.	DATE	DESCRIPTION	BY

DOGWOOD ST. BRIDGE REPLACEMENT

DRAWN EMB | DSGN. MCF | CHKD. JP

CITY OF ISSAQUAH

GIRDER DETAILS 2

DATE: APRIL 2014 | JOB # BRM-1408(002) | SCALE: AS NOTED

exa 04/21/14 5:51pm - \\blvfs1\project\V:\SSY00000002\04000AD\EB\SHEETS\EB-GD-X-ISSY0002-02.dwg

GIRDER SCHEDULE

SPAN	GIRDER	GIRDER SERIES	END 1 TYPE	END 2 TYPE	B (FT-IN)	L (FT-IN)	LL (FT-IN)	LT (FT-IN)	P1 (FT-IN)	P2 (FT-IN)	PLAN LENGTH (ALONG GIRDER GRADE) (FT-IN)	MIN. CONC. COMP. STRENGTH @ 28-DAYS F'C (KSI)	MIN. CONC. COMP. STRENGTH @ RELEASE F'CI (KSI)	NUMBER OF STRAIGHT STRANDS	NUMBER OF HARPED STRANDS	LOCATION OF C.G. STRANDS E (IN)	LOCATION OF C.G. STRANDS F℄ (IN)	LOCATION OF C.G. STRANDS Fo (IN)	STRAIGHT STR. TO EXTEND END 1	STRAIGHT STR. TO EXTEND END 2	D @ 40 DAYS (IN) (D40)	D @ 120 DAYS (IN) (D120)	REINFORCEMENT DETAILS V1	V2 (IN)	V3	V4 (IN)	V5	V6 (IN)
1	A – J	W35DG	C	C	2'-4"	3'-0"	2'-11"	2'-11"	7"	7"	93'-0"	9.3	7.5	22	10	3½	4	8	–	–	4⅝	5¼	6	3	21	6	28	9

* FORMWORK PRECAMBER SHALL BE AS SHOWN BELOW.
CHORDED SECTIONS ARE PERMISSIBLE.

DISTANCE ALONG SPAN:	0%	10%	20%	30%	40%	50%	60%	70%	80%	90%	100%
PRECAMBER (IN.)	0	3⅛	4¾	5⅜	5⅝	5⅝	5⅝	5⅜	4¾	3⅛	0

GIRDER NOTES

1. PLAN LENGTH SHALL BE INCREASED AS NECESSARY TO COMPENSATE FOR SHORTENING DUE TO PRESTRESS AND SHRINKAGE.
2. ALL PRETENSIONED STRANDS SHALL BE 0.6"ø AASHTO M203 GRADE 270 LOW RELAXATION STRANDS, JACKED TO 202.5 KSI.
3. CUT ALL STRANDS FLUSH WITH THE GIRDER ENDS AND PAINT WITH AN APPROVED EPOXY RESIN, EXCEPT FOR EXTENDED STRANDS AS SHOWN.
4. THE TOP SURFACE OF THE GIRDER FLANGE SHALL BE FINISHED IN ACCORDANCE WITH SECTION 6-02.3(25)H OF THE STANDARD SPECIFICATIONS.
5. LIFTING EMBEDMENTS SHALL BE INSTALLED IN ACCORDANCE WITH SECTION 6-02.3(25)L OF THE STANDARD SPECIFICATIONS. AFTER ERECTION, CUT OFF LIFTING EMBEDMENTS 1 INCH BELOW THE TOP OF THE FLANGE AND FILL WITH AN APPROVED GROUT.
6. CAUTION SHALL BE EXERCISED IN HANDLING AND PLACING GIRDERS. ALL GIRDERS SHALL BE CHECKED BY THE CONTRACTOR TO ENSURE THAT THEY ARE BRACED ADEQUATELY TO PREVENT TIPPING AND TO CONTROL LATERAL BENDING DURING SHIPPING. ONCE ERECTED, ALL GIRDERS SHALL BE BRACED LATERALLY TO PREVENT TIPPING UNTIL THE DIAPHRAGMS ARE CAST AND CURED.
7. FORMS FOR BEARING PAD RECESSES SHALL BE CONSTRUCTED AND FASTENED IN SUCH A MANNER AS TO NOT CAUSE DAMAGE TO THE GIRDER DURING THE STRAND RELEASE OPERATION.
8. STRUCTURAL STEEL SHAPES AND ASSEMBLIES SHALL BE ASTM A36. THEY SHALL BE PAINTED WITH A PRIMER COAT IN ACCORDANCE WITH STD. SPEC. 6-07.3(9). WELD TIES SHALL BE PAINTED WITH A FIELD PRIMER COAT OF AN ORGANIC ZINC PAINT AFTER FIELD WELDING.
9. FOR DIAPHRAGMS, OMIT HOLES AND PLACE INSERTS ON THE INTERIOR FACE OF EXTERIOR GIRDERS. PLACE HOLES AND INSERTS PARALLEL TO SKEW. INSERTS SHALL BE 1"ø MEADOWBURKE MX-3 HI-TENSILE, 1"ø x 5½" WILLIAMS F22 OPEN FERRULE INSERT, 1"ø x 4⅝" DAYTON-SUPERIOR F-62 FLARED THIN SLAB FERRULE INSERT OR APPROVED EQUAL.
10. DEFORMED WELDED WIRE REINFORCEMENT CONFORMING TO SECTION 9-07.7 WITH DEFORMED WIRE CONFORMING TO SECTION 9-07.8 MAY BE SUBSTITUTED FOR MILD STEEL REINFORCEMENT IF AASHTO LRFD BRIDGE DESIGN SPECIFICATION REQUIREMENTS (INCLUDING DEVELOPMENT AND ANCHORAGE) ARE MET. WELDED WIRE REINFORCEMENT SHALL HAVE THE SAME AREA AND SPACING AS THE MILD STEEL REINFORCEMENT THAT IT REPLACES AND THE YIELD STRENGTH SHALL BE GREATER THAN OR EQUAL TO 60 KSI. SHEAR STIRRUP LONGITUDINAL WIRES AND TACK WELDS SHALL BE EXCLUDED FROM GIRDER WEBS. LONGITUDINAL WIRES FOR ANCHORAGE OF WELDED WIRE REINFORCEMENT SHALL HAVE AN AREA OF 40% OR MORE OF THE AREA OF THE WIRE BEING ANCHORED BUT SHALL NOT BE LESS THAN D4.

95% SUBMITTAL

DAVID EVANS AND ASSOCIATES INC.
415 - 118th Avenue SE
Bellevue Washington 98005-3518
Phone: 425.519.6500

NO.	DATE	DESCRIPTION	BY

DOGWOOD ST. BRIDGE REPLACEMENT

DRAWN EMB | DSGN. MCF | CHKD. JP

CITY OF ISSAQUAH

GIRDER SCHEDULE

DATE: APRIL 2014 | JOB # BRM-1408(002) | SCALE: AS NOTED

oxd 04/21/14 5:51pm – \\bivfs1\project\\SSYO0000002\04GDCAD\EB\SHEETS\EB-GD-X-ISSY002-SCHED.dwg

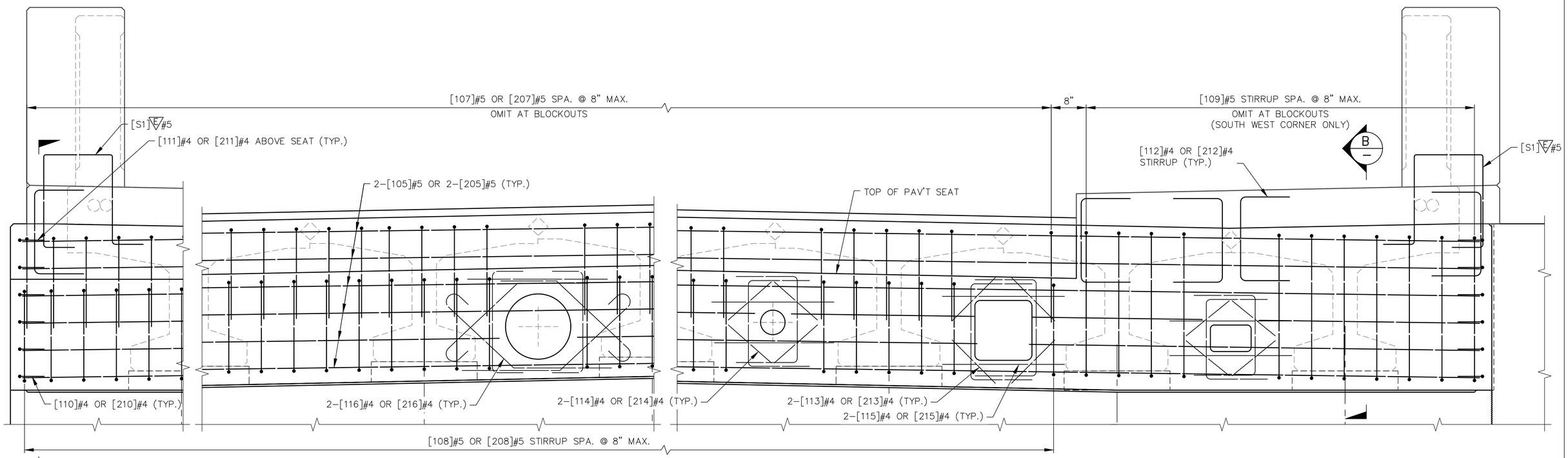

ELEVATION
END DIAPHRAGM

ALL DIMENSIONS TAKEN ALONG DIAPHRAGM
(PIER 1 LOOKING AHEAD ON STATION SHOWN,
PIER 2 SIMILAR)

A

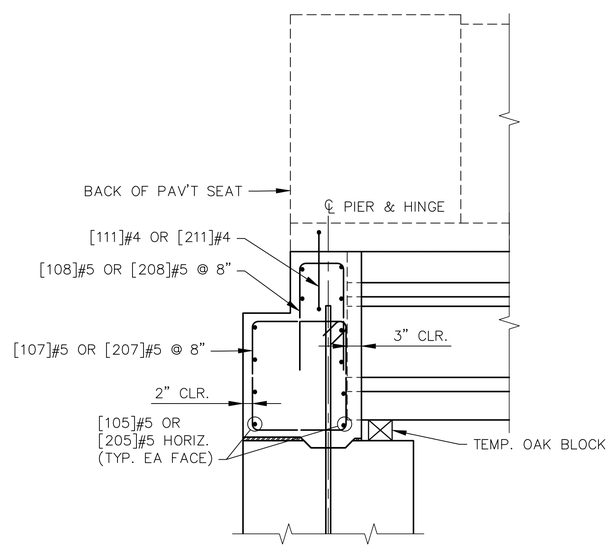

SECTION A

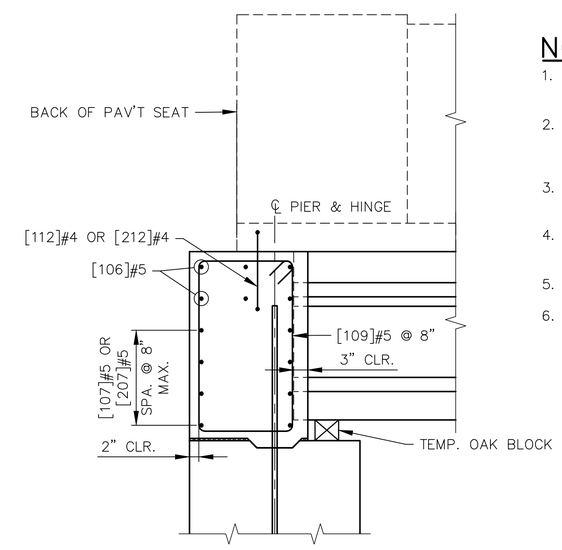

SECTION B

NOTES:

1. GIRDERS SHALL BE HELD RIGIDLY IN PLACE WHEN DIAPHRAGMS ARE PLACED.
2. CUT/RELEASE GIRDER TEMPORARY STRANDS BEFORE CASTING DIAPHRAGM. SEE TEMPORARY STRAND CUTTING SEQUENCE.
3. EXTENDED STRANDS AND GIRDER REINFORCING NOT SHOWN FOR CLARITY.
4. FOR CONCRETE PLACEMENT PROCEDURE SEE "CONSTRUCTION SEQUENCE – SUPERSTRUCTURE" SHEET 23.
5. CUT BARS AS NEEDED FOR UTILITY BLOCKOUTS.
6. SEE UTILITY HANGER DETAILS, SHEET 37.

95% SUBMITTAL

DAVID EVANS AND ASSOCIATES INC.
415 - 118th Avenue SE
Bellevue Washington 98005-3518
Phone: 425.519.6500

NO.	DATE	DESCRIPTION	BY

DRAWN EMB | DSGN. HAC | CHKD. MCF

DOGWOOD ST. BRIDGE REPLACEMENT

CITY OF ISSAQUAH

END DIAPHRAGM DETAILS

DATE: APRIL 2014 | JOB # BRM-1408(002) | SCALE: AS NOTED

SHEET 35 OF 68

oxo 04/21/14 5:51pm – \\blvfs1\project\\ISSY000000002\04000AD\EB\SHEETS\EB-DD-X-ISSY002-END.dwg

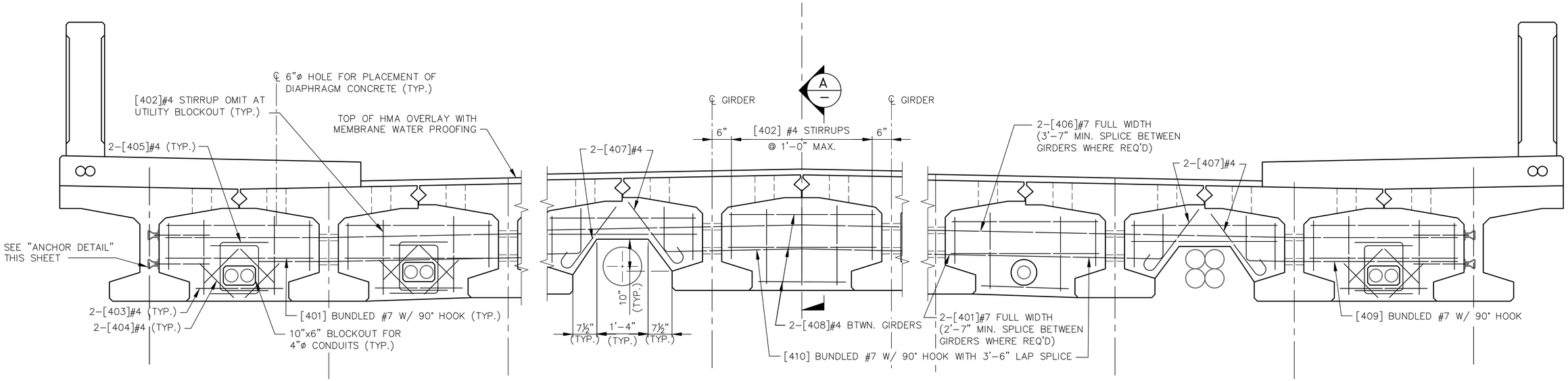

ELEVATION
INTERMEDIATE DIAPHRAGM

ALL DIMENSIONS TAKEN ALONG DIAPHRAGM
(LOOKING AHEAD ON STATION)

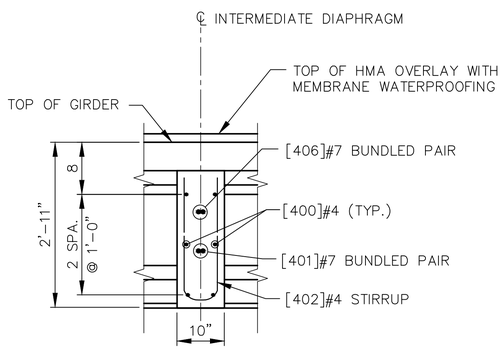

SECTION A

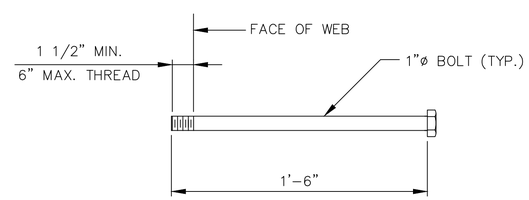

ANCHOR DETAIL

ASTM A-307

NOTES:

1. GIRDERS SHALL BE HELD RIGIDLY IN PLACE WHEN DIAPHRAGMS ARE PLACED.
2. REINFORCING BAR SHALL BE THREADED THROUGH HOLES IN GIRDERS PRIOR TO PLACING OF EXTERIOR GIRDERS.

95% SUBMITTAL

DAVID EVANS AND ASSOCIATES INC.
415 - 118th Avenue SE
Bellevue Washington 98005-3518
Phone: 425.519.6500

NO.	DATE	DESCRIPTION	BY

DOGWOOD ST. BRIDGE REPLACEMENT

DRAWN EMB | DSGN. MCF | CHKD. JP

CITY OF ISSAQUAH

INTERMEDIATE DIAPHRAGM DETAILS

DATE: APRIL 2014 | JOB # BRM-1408(002) | SCALE: AS NOTED

SHEET 36 OF 68

exa 04/21/14 5:51pm - \\blvfs1\project\V:\SSY0000000002\0400CAD\EB\SHEETS\EB-DD-X-ISSY0002-INTER.dwg

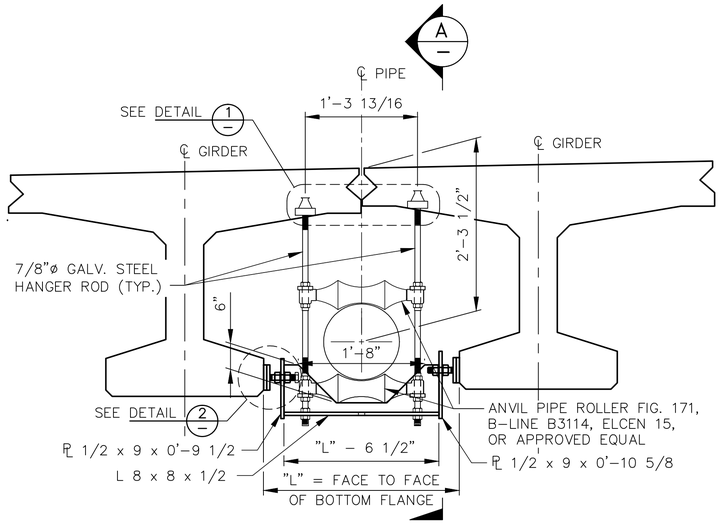

HANGER UTILITY SUPPORT

WATER LINE

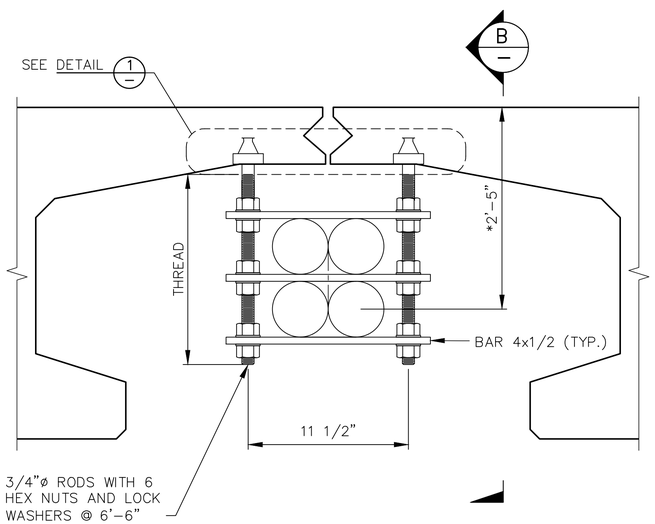

MULTIPLE UTILITY DETAIL

TELEPHONE, CITY, AND ELECTRICAL

*FOR BAYS WITH ONLY A SINGLE ROW OF UTILITIES, THIS DIMENSION SHALL BE TO THE BOTTOM OF THE CONDUIT.

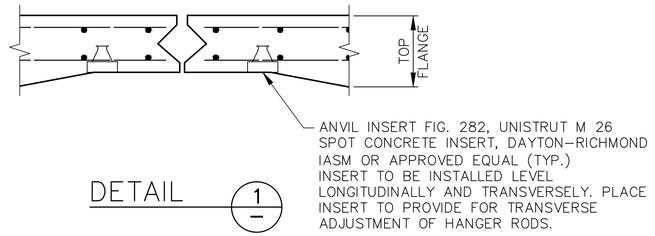

DETAIL 1

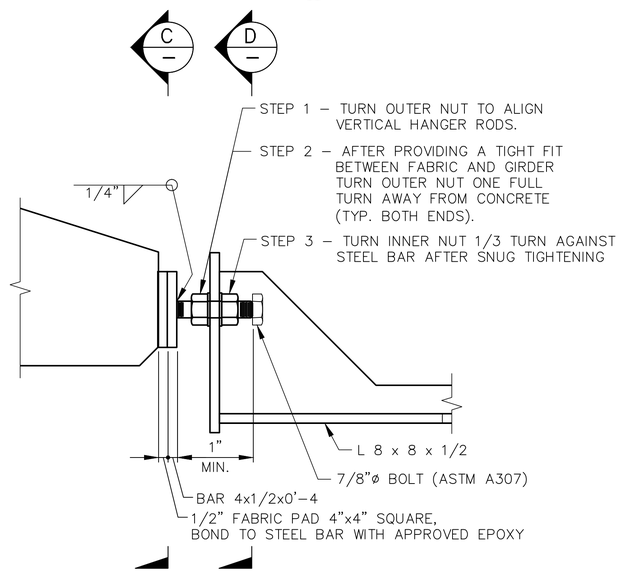

DETAIL 2

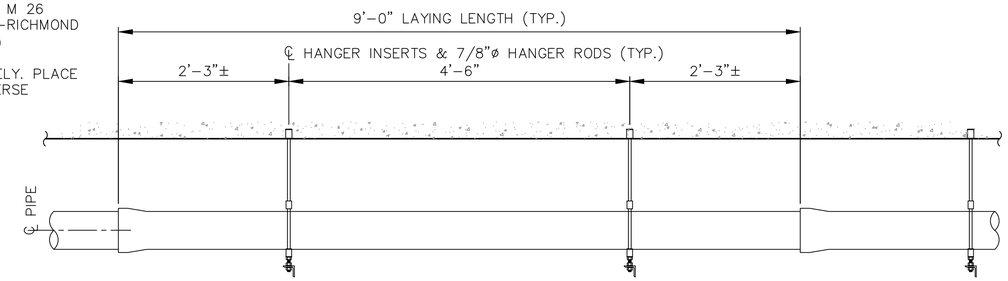

SECTION A

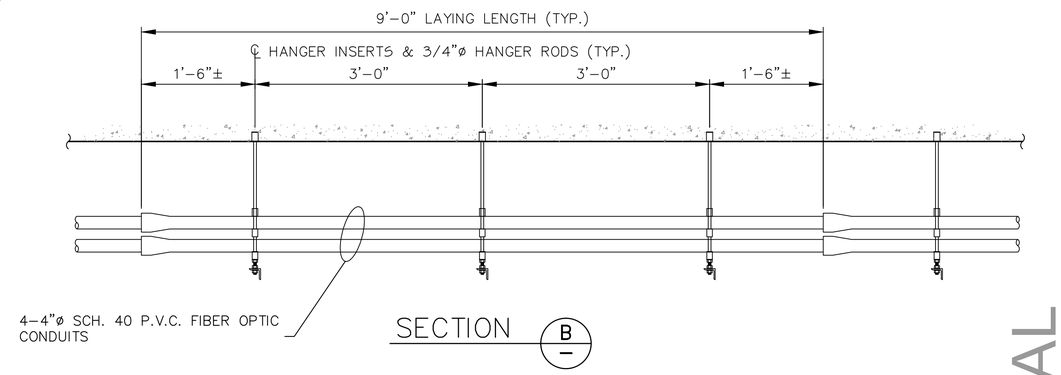

SECTION B

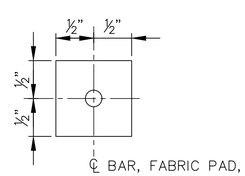

SECTION C

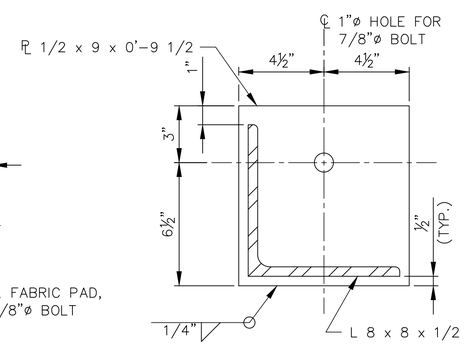

SECTION D

GIRDER D

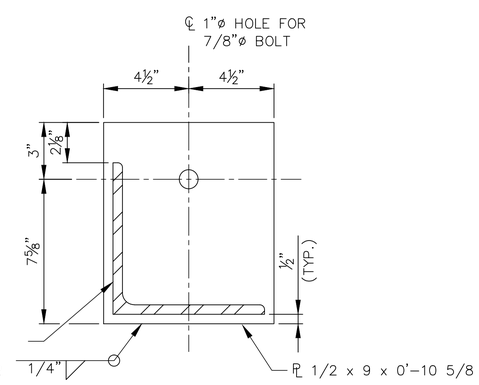

SECTION D

GIRDER E

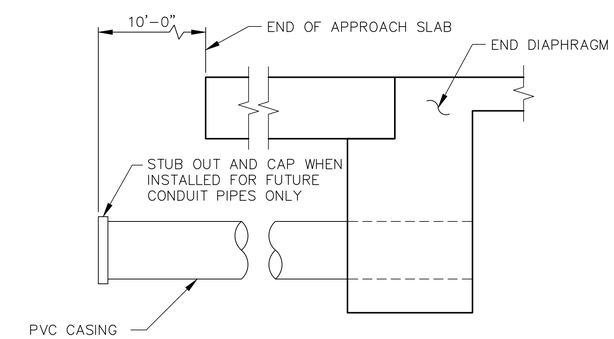

UTILITY CONDUIT PLACEMENT DETAIL

95% SUBMITTAL

DAVID EVANS AND ASSOCIATES INC.
415 - 118th Avenue SE
Bellevue Washington 98005-3518
Phone: 425.519.6500

NO.	DATE	DESCRIPTION	BY

DRAWN EMB | DSGN. MCF | CHKD. JP

DOGWOOD ST. BRIDGE REPLACEMENT

CITY OF ISSAQUAH

UTILITY HANGER DETAILS

DATE: APRIL 2014 | JOB # BRM-1408(002) | SCALE: AS NOTED

SHEET 37 OF 68

04/21/14 5:51pm - \\bivfs1\project\V\ISSY00000002\04000CAD\EB\SHEETS\EB-UT-X-ISSY0002.dwg

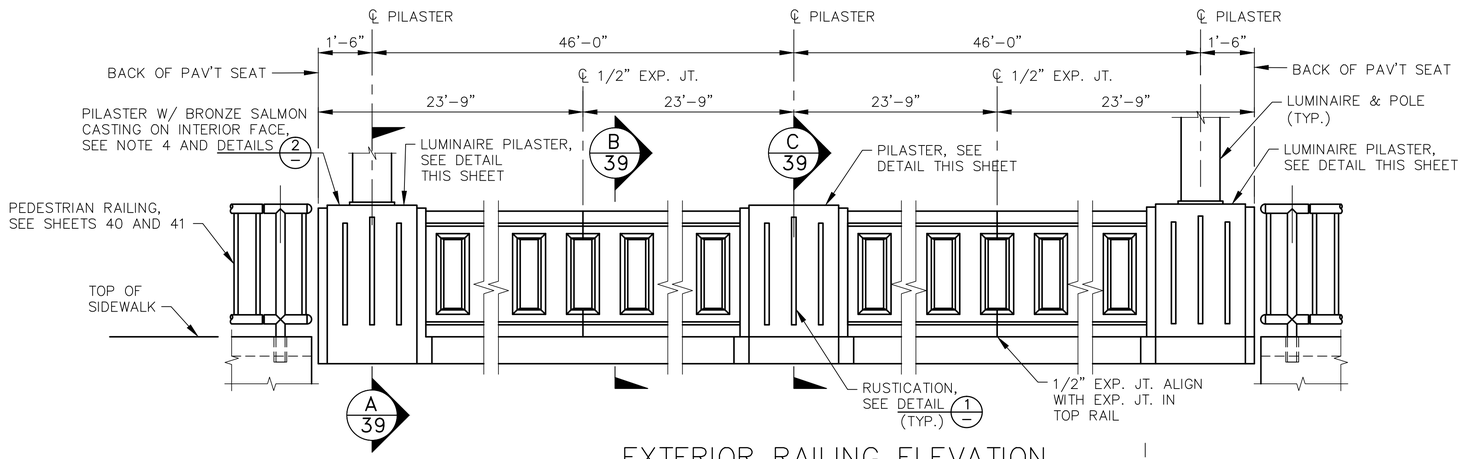

EXTERIOR RAILING ELEVATION

REINFORCEMENT NOT SHOWN FOR CLARITY
(SEE SHEET 39 FOR REINFORCEMENT DETAILS)

NOTES:

1. NORTH RAILING SHOWN, LOOKING SOUTH. SOUTH RAILING SIMILAR EXCEPT AT SOUTHWEST CORNER. FOR LOCATIONS OF LUMINAIRE & POLES SEE BRIDGE LUMINAIRE LOCATION TABLE THIS SHEET.
2. THIS RAILING HAS BEEN SUCCESSFULLY EVALUATED BY FULL-SCALE IMPACT TESTS. TEST DOCUMENTATION MAY BE FOUND IN RESEARCH REPORT 1185-3F, "AESTHETICALLY PLEASING CONCRETE COMBINATION PEDESTRIAN - TRAFFIC BRIDGE RAIL - TEXAS TYPE C411" OF RESEARCH STUDY 2-5-89/90-1185, TEXAS TRANSPORTATION INSTITUTE, AUGUST 1990.
3. PROVIDE 1/2" PREFORMED JOINT FILLER IN EXPANSION JOINTS IN RAILS.
4. PROVIDE BRONZE SALMON CASTING ONLY ON PILASTER INDICATED ON SOUTH RAILING. DO NOT PROVIDE ON NORTH RAILING.

BRIDGE LUMINAIRE LOCATIONS TABLE

STATION	OFFSET
2+23.64	23.00' LT.
2+69.64	23.00' RT.
3+15.64	23.00' LT.

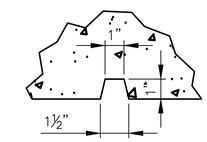

DETAIL 1

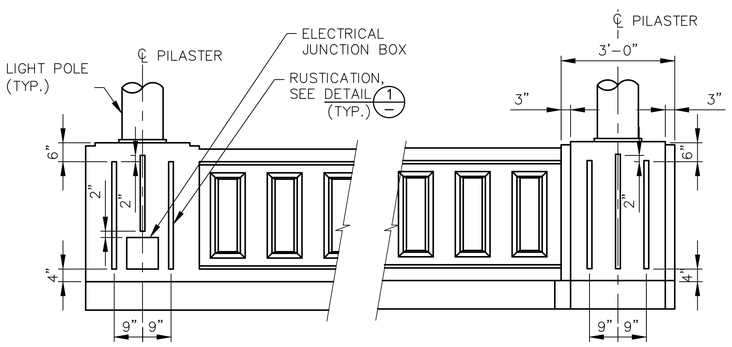

INTERIOR ELEVATION — EXTERIOR ELEVATION

LUMINAIRE PILASTER DETAIL

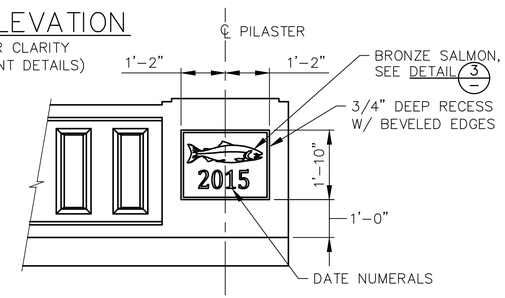

DETAIL 2
INTERIOR ELEVATION

NOTES:

1. BRONZE SALMON CASTING SHALL CONFORM TO THE REQUIREMENTS OF AASHTO M 107.
2. FOR DETAILS OF DATE NUMERALS, SEE STD. PLAN E-1. THE DATE SHALL BE THE YEAR CONSTRUCTION OF BRIDGE IS COMPLETED.
3. SUBMIT PROPOSED DETAILS OF BRONZE SALMON TO ENGINEER FOR APPROVAL PRIOR TO FABRICATION.

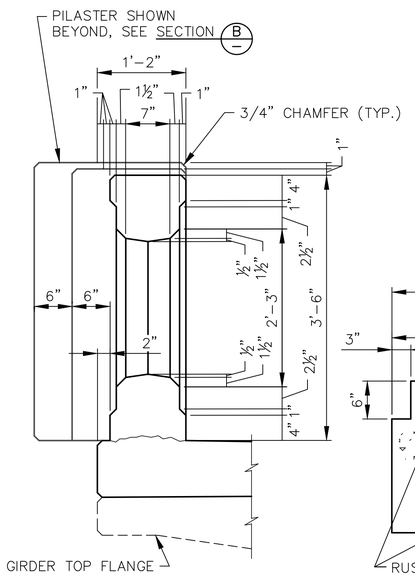

SECTION A

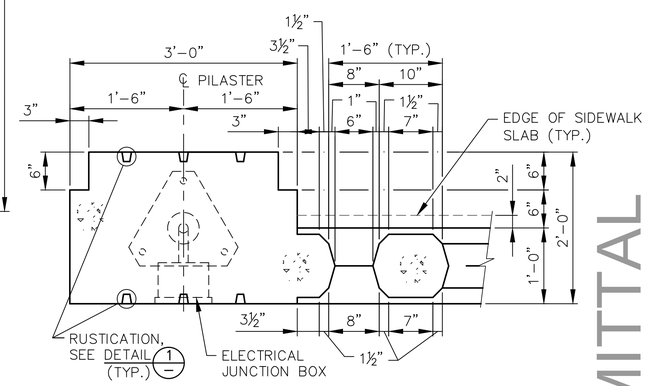

SECTION E

NOTES:

1. PILASTER W/ LUMINAIRE & POLE SHOWN. FOR PILASTER W/O LUMINAIRE & POLE, OMIT ELECTRICAL JUNCTION BOX & CONDUIT AND PROVIDE RUSTICATION ON INTERIOR FACE TO MATCH THAT ON EXTERIOR FACE.
2. PILASTER W/ RAIL ON ONE SIDE ONLY SHOWN. PILASTER W/ RAIL ON TWO SIDES IS SIMILAR.

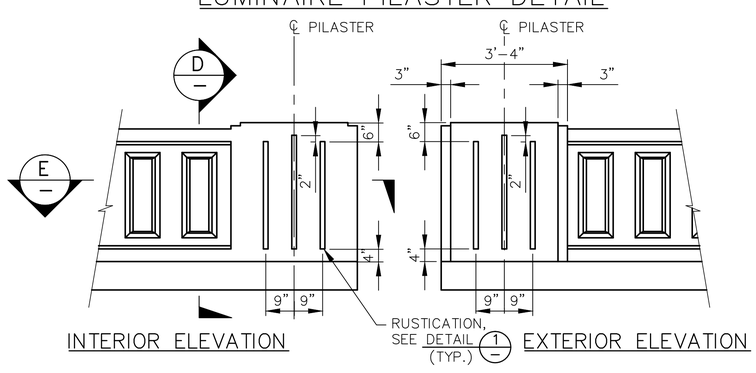

INTERIOR ELEVATION — EXTERIOR ELEVATION

PILASTER DETAIL

ELEVATION

24" LONG x APPROX. 6" HIGH BRONZE SALMON CASTING

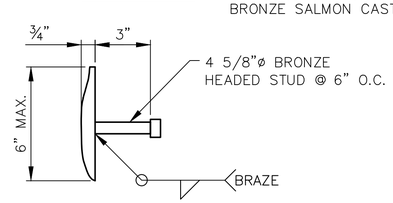

SECTION

DETAIL 3

95% SUBMITTAL

DAVID EVANS AND ASSOCIATES INC.
415 - 118th Avenue SE
Bellevue Washington 98005-3518
Phone: 425.519.6500

NO.	DATE	DESCRIPTION	BY

DOGWOOD ST. BRIDGE REPLACEMENT

DRAWN EMB | DSGN. MCF | CHKD. JP

CITY OF ISSAQUAH

ISSAQUAH CONCRETE BRIDGE RAILING DETAILS 1

DATE: APRIL 2014 | JOB # BRM-1408(002) | SCALE: AS NOTED

oxo 04/21/14 5:51pm - \\bivfs1\project1\SSY000000002\0400CAD\EB\SHEETS\EB-R4-X-SSY0002-01.dwg

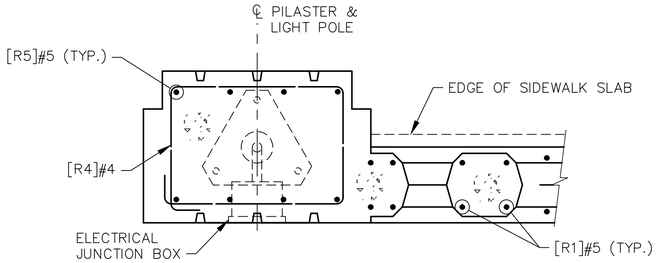

BRIDGE RAIL REINFORCEMENT – PLAN

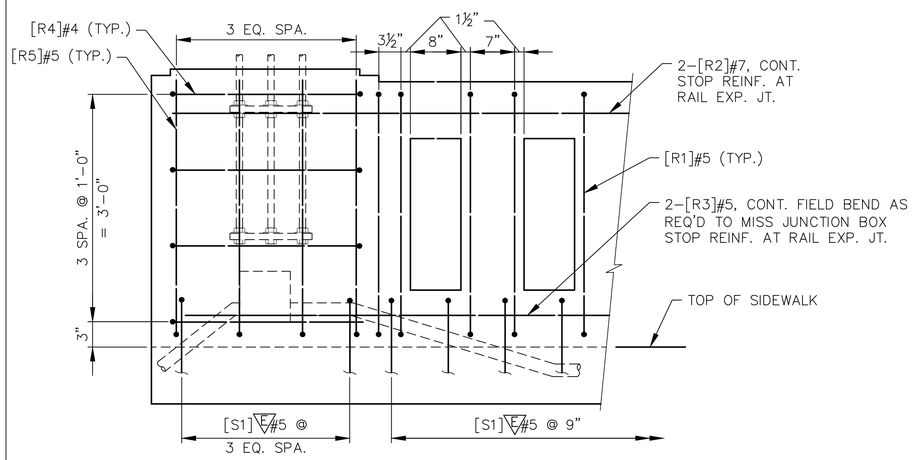

BRIDGE RAIL REINFORCEMENT – ELEVATION

NOTES:

1. PILASTER W/ LUMINAIRE & POLE SHOWN. FOR PILASTER W/O LUMINAIRE & POLE, OMIT ELECTRICAL JUNCTION BOX & CONDUIT AND PROVIDE RUSTICATION ON INTERIOR FACE TO MATCH THAT ON EXTERIOR FACE.
2. PILASTER W/ RAIL ON ONE SIDE ONLY SHOWN. PILASTER W/ RAIL ON TWO SIDES IS SIMILAR.

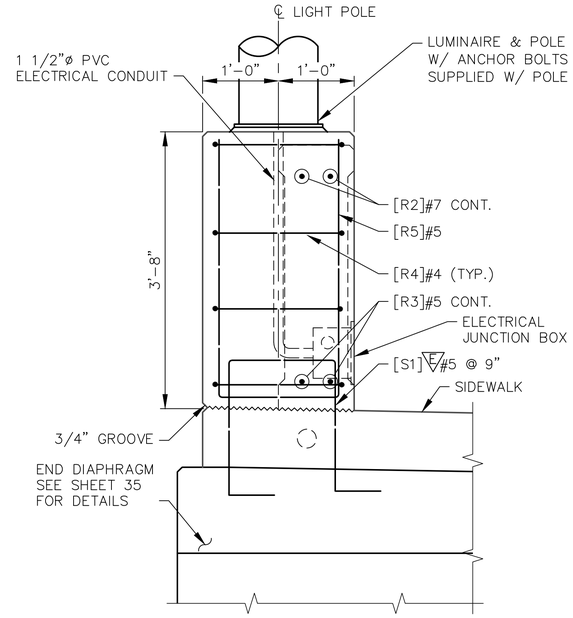

SECTION A/38

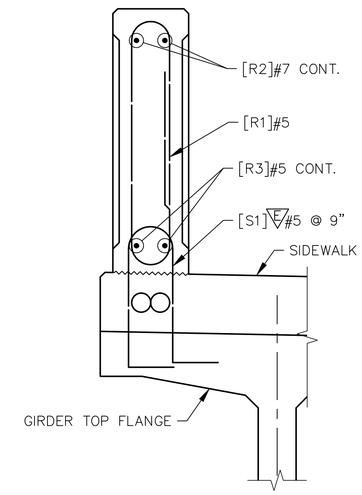

SECTION B/38

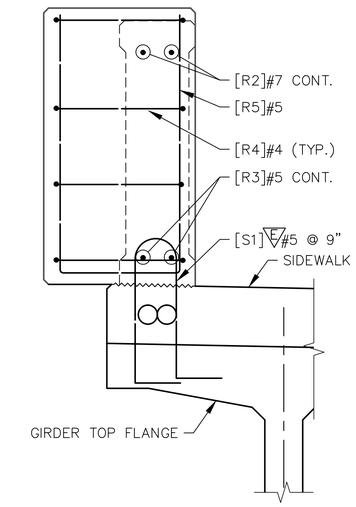

SECTION C/38

MARK	LOCATION	SIZE	
R1	POST VERT.	5	
R2	TOP RAIL HORIZ.	7	STR.
R3	BOT. RAIL HORIZ.	5	STR.
R4	PILASTER HORIZ. TIE	4	
R5	PILASTER VERT.	5	

BENDING DIAGRAM (ALL DIMENSIONS ARE OUT TO OUT)

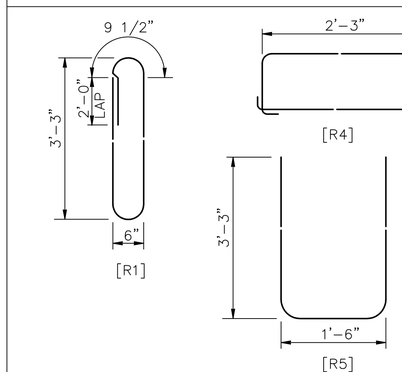

95% SUBMITTAL

DAVID EVANS AND ASSOCIATES INC.
415 - 118th Avenue SE
Bellevue Washington 98005-3518
Phone: 425.519.6500

NO.	DATE	DESCRIPTION	BY

DOGWOOD ST. BRIDGE REPLACEMENT

DRAWN EMB | DSGN. MCF | CHKD. JP

CITY OF ISSAQUAH

ISSAQUAH CONCRETE BRIDGE RAILING DETAILS 2

DATE: APRIL 2014 | JOB # BRM–1408(002) | SCALE: AS NOTED

04/21/14 5:51pm – \\bivfs1\project1\VSSY0000002\0400CAD\EB\SHEETS\EB-RA-X-ISSY0002-02.dwg

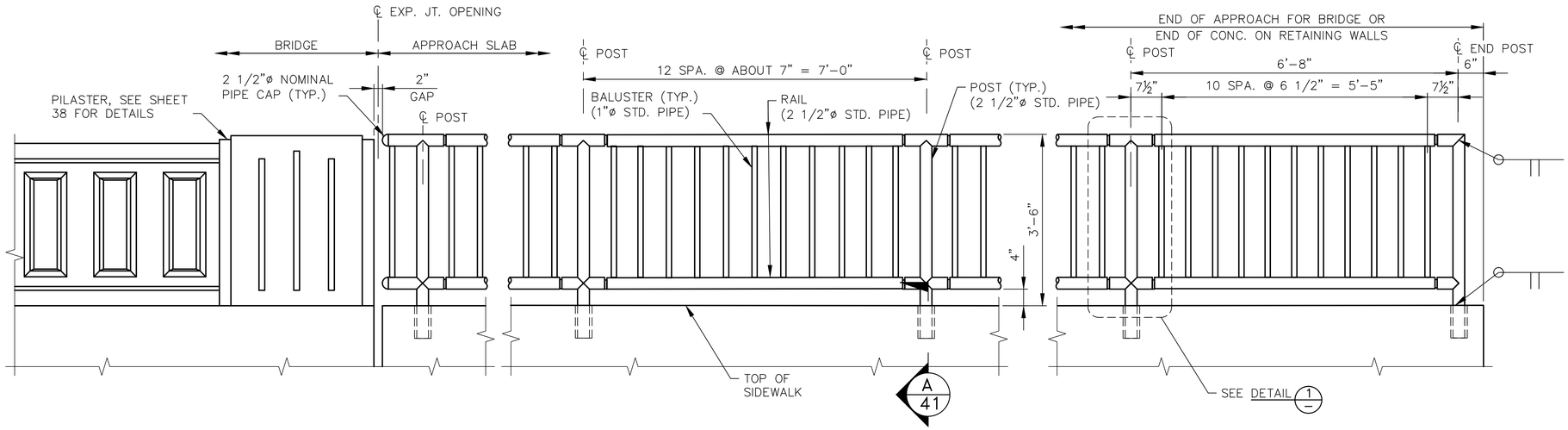

ELEVATION

BALUSTERS NORMAL TO GRADE
TOP & BOTTOM RAILS PARALLEL TO GRADE

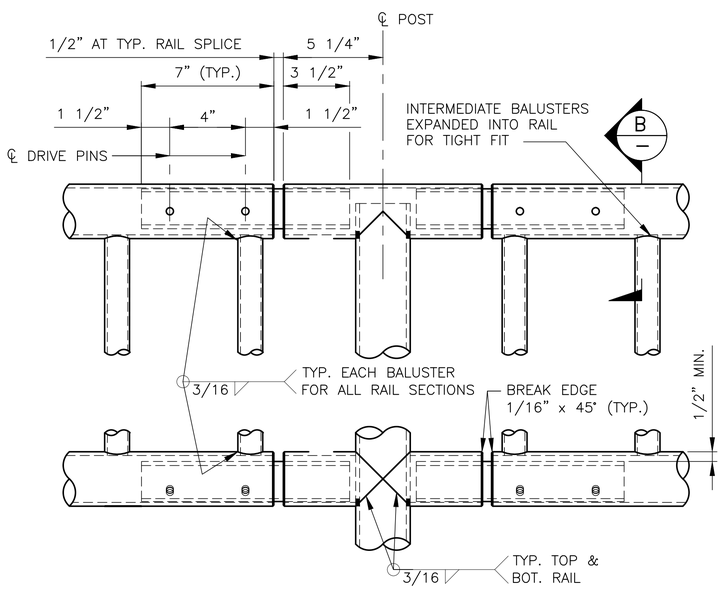

DETAIL 1

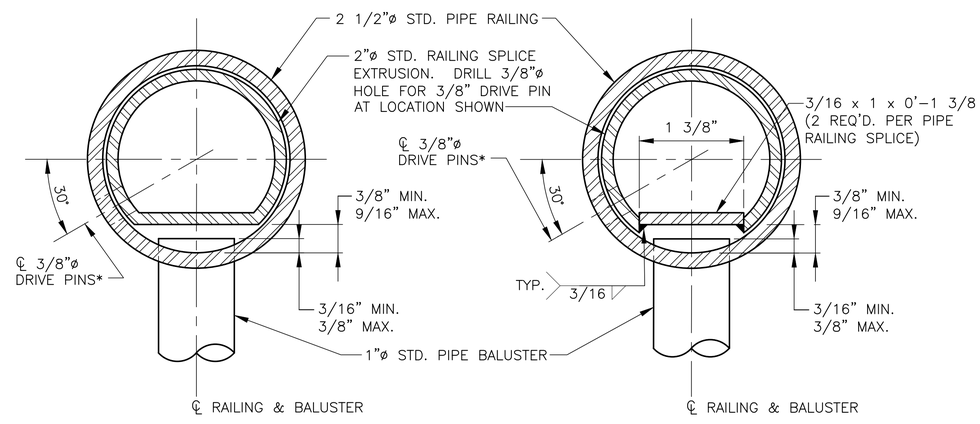

SECTION B — OPTION #1

* LOCATE ON OPPOSITE SIDE OF TRAFFIC. DRIVE PINS SHALL BE DRIVEN FLUSH WITH THE OUTSIDE FACE OF THE RAILING.

SECTION B — OPTION #2

NOTES:

1. SHOP DRAWINGS OF RAILING SHALL BE SUBMITTED FOR APPROVAL SHOWING COMPLETE DIMENSIONS AND DETAILS OF FABRICATION AND INCLUDING AN ERECTION DIAGRAM. MATERIAL BEING USED SHALL BE SPECIFIED IN THE SHOP DRAWINGS.
2. PIPE RAILING, AND PIPE RAILING SPLICES, MAY BE HEATED TO NOT MORE THAN 400°F FOR A PERIOD NOT TO EXCEED 30 MINUTES TO FACILITATE FORMING OR BENDING HORIZONTAL CURVATURE.
3. CUTTING SHALL BE DONE BY SAWING OR MILLING AND ALL CUTS SHALL BE TRUE AND SMOOTH. FLAME CUTTING WILL NOT BE PERMITTED.
4. WELDING OF ALUMINUM SHALL CONFORM TO STD. SPEC. SECTION 9-28.14(3).
5. AFTER FABRICATION, POSTS SHALL BE HEAT TREATED IN ACCORDANCE WITH SECTION 6.5 OF THE AASHTO STANDARD SPECIFICATIONS FOR STRUCTURAL SUPPORTS FOR HIGHWAY SIGNS, LUMINAIRES, AND TRAFFIC SIGNALS DATED 2001 AND INTERIMS THROUGH 2003.
6. ALL ALUMINUM PARTS SHALL BE GIVEN A CLEAR ANODIC COATING OF AT LEAST 0.0006 INCHES THICK AND SEALED TO MEET THE REQUIREMENTS OF ASTM B 580 WITH A UNIFORM FINISH.
7. PIPE RAILING, PIPE BALUSTERS, PIPE RAILING SPLICES, SHALL BE ADEQUATELY WRAPPED TO INSURE SURFACE PROTECTION DURING HANDLING AND TRANSPORTATION TO THE JOB SITE.

MAT'L	PART	MAT'L SPEC.
ALUMINUM	PIPES	ASTM B 221-6005-T5 SCHEDULE 40 (STD. PIPE) ASTM B 241 OR B 429 6061-T6
	BAR	ASTM B 221-6005-T5
STEEL	DRIVE PINS	ASTM A 276 TYPE 302 STAINLESS STEEL

95% SUE

DAVID EVANS AND ASSOCIATES INC.
415 - 118th Avenue SE
Bellevue Washington 98005-3518
Phone: 425.519.6500

NO.	DATE	DESCRIPTION	BY

DRAWN EMB | DSGN. HAC | CHKD. MCF

DOGWOOD ST. BRIDGE REPLACEMENT

CITY OF ISSAQUAH

PEDESTRIAN RAILING DETAILS 1

DATE: APRIL 2014 | JOB # BRM-1408(002) | SCALE: AS NOTED

oxo 04/21/14 5:51pm - \\bivis1\project1\SSY00000002\040DCAD\EB\SHEETS\EB-PR-X-ISSY0002-01.dwg

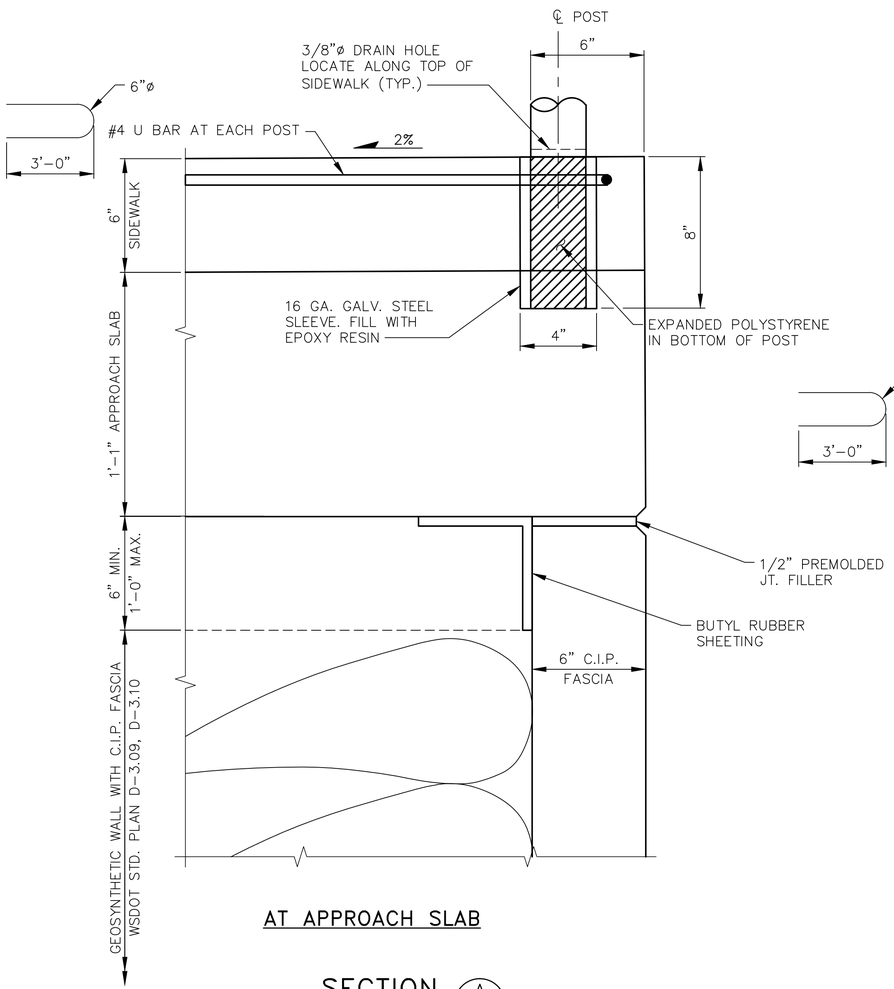

AT APPROACH SLAB

SECTION A/40

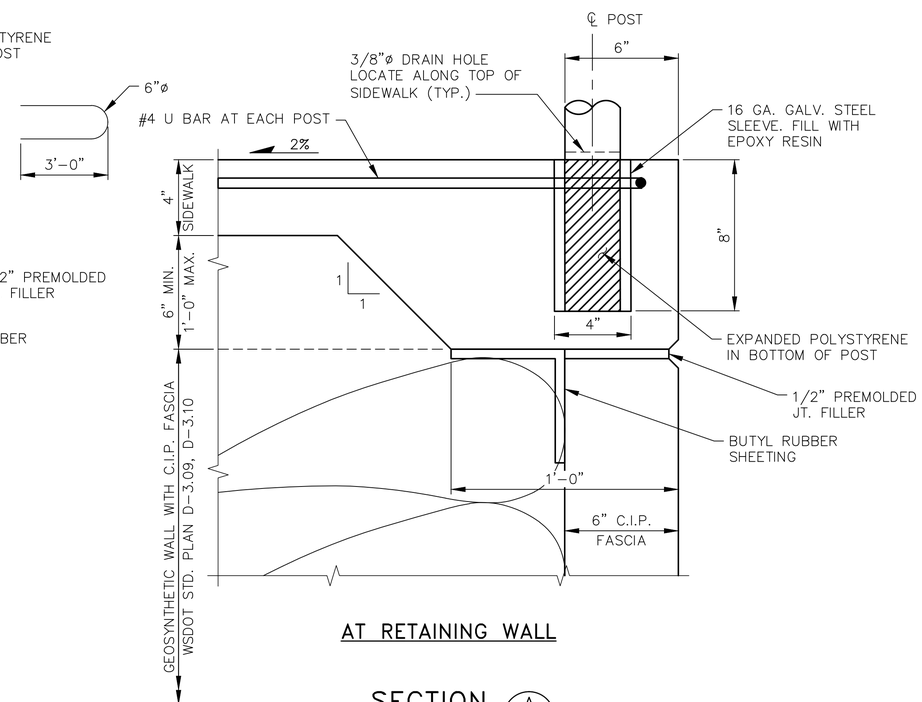

AT RETAINING WALL

SECTION A/40

95% SUBMITTAL

DAVID EVANS AND ASSOCIATES INC.
415 - 118th Avenue SE
Bellevue Washington 98005-3518
Phone: 425.519.6500

NO.	DATE	DESCRIPTION	BY

DOGWOOD ST. BRIDGE REPLACEMENT

DRAWN EMB | DSGN. HAC | CHKD. MCF

CITY OF ISSAQUAH

PEDESTRIAN RAILING DETAILS 2

DATE: APRIL 2014 | JOB # BRM-1408(002) | SCALE: AS NOTED

SHEET 41 OF 68

oxd 04/21/14 5:51pm - \\bivfs1\project\V\VSSY0000002\04000CAD\EB\SHEETS\EB-PR-X-ISSY0002-02.dwg

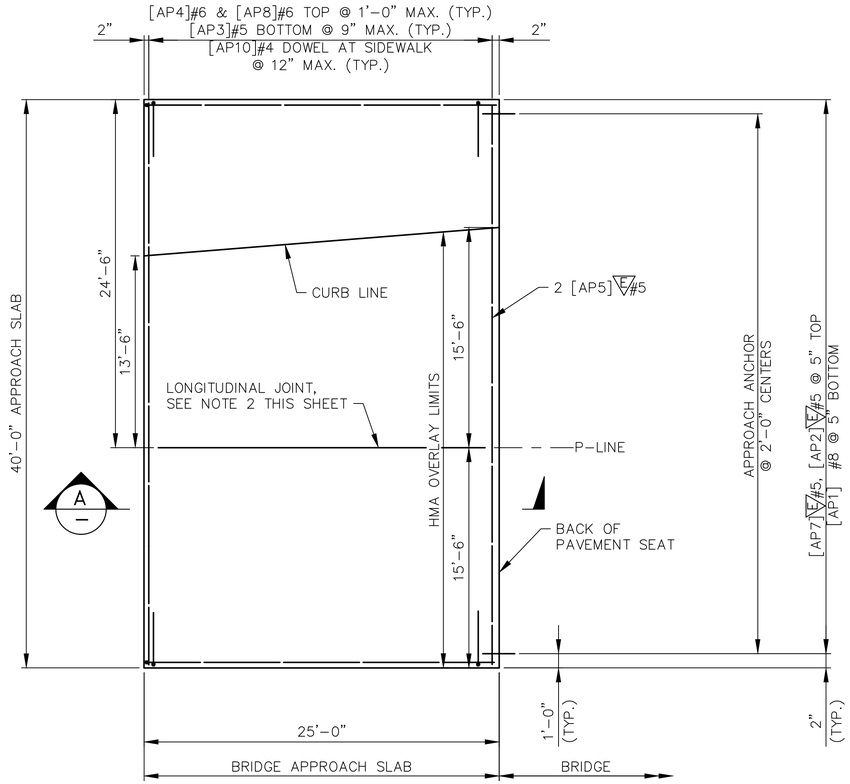

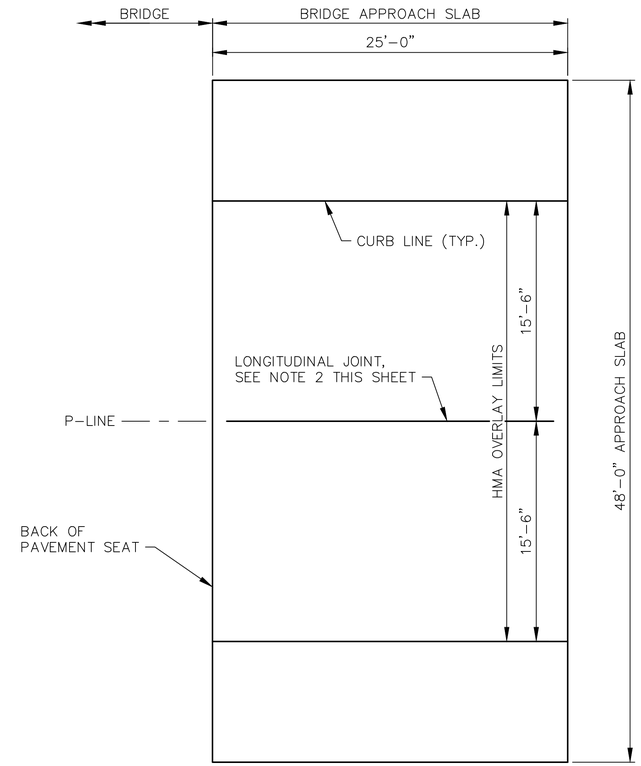

PLAN

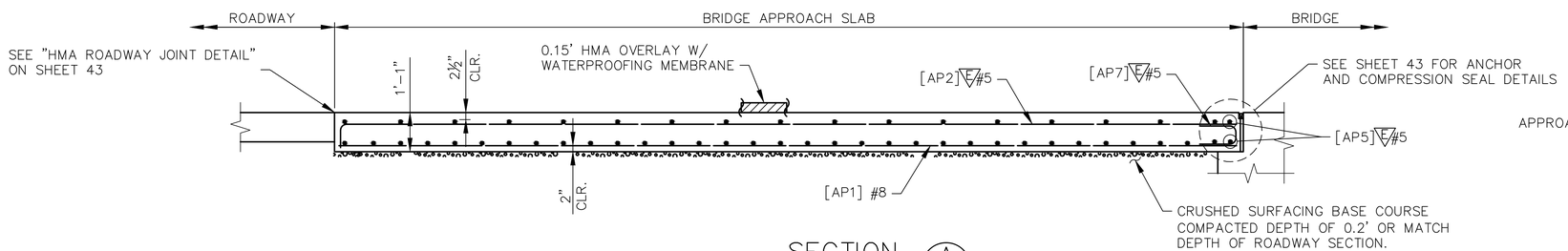

SECTION A

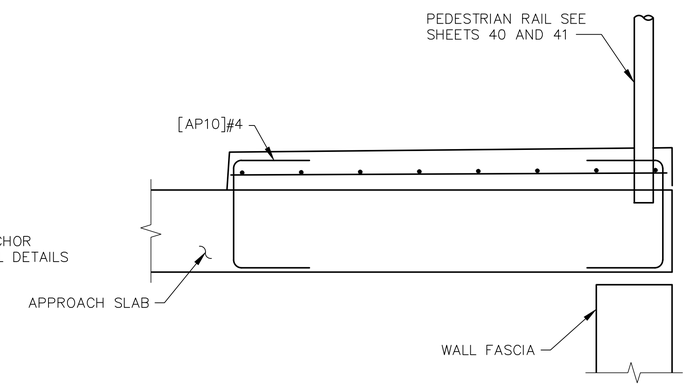

APPROACH SLAB TYPICAL SECTION

BENDING DIAGRAM

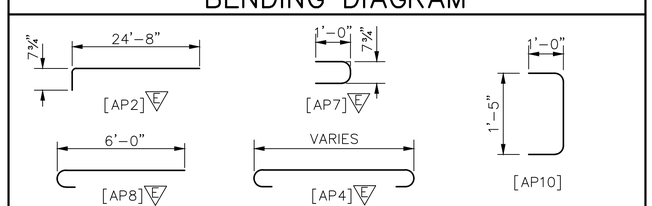

E = EPOXY COATED REINFORCING STEEL NOTE: ALL DIMENSIONS ARE OUT TO OUT

NOTES:

1. ALL EDGES OF BRIDGE APPROACH SLAB SHALL HAVE ½" RADIUS EXCEPT AT LONGITUDINAL JOINTS AND ADJACENT TO L-TYPE ABUTMENTS.
2. LONGITUDINAL JOINTS SHALL BE PLACED ON LANE LINES AND SHALL BE CONSTRUCTED AND SEALED IN ACCORDANCE WITH STD. SPEC. SECTION 5-05.3(8). JOINTS MAY BE EITHER A SAWCUT CRACK CONTROL JOINT OR A CONSTRUCTION JOINT. SAWCUT JOINTS SHALL TERMINATE 1'-0" BEFORE REACHING EDGE OF SLAB AND MUST BE SAW CUT AS SOON AS POSSIBLE AFTER PLACEMENT OF CONCRETE. SEE "LONGITUDINAL JOINT DETAIL" ON SHEET 43.
3. THE MINIMUM LAP SPLICE OF #5 IS 2'-0", E #5 IS 2'-6", E #6 IS 3'-0", AND #8 IS 3'-3". ALL LAP SPLICES SHALL BE STAGGERED SO THAT NO MORE THAN 50% OF REBAR IS SPLICED AT THE SAME LOCATION. LAP SPLICES SHALL BE LOCATED WITHIN THE MIDDLE HALF OF THE BRIDGE APPROACH SLAB. OPTIONAL SPLICES ARE ALLOWED FOR [AP4] E #6.

95% SUBMITTAL

DAVID EVANS AND ASSOCIATES INC.
415 - 118th Avenue SE
Bellevue Washington 98005-3518
Phone: 425.519.6500

NO.	DATE	DESCRIPTION	BY

DRAWN EMB | DSGN. MCF | CHKD. JP

DOGWOOD ST. BRIDGE REPLACEMENT

CITY OF ISSAQUAH

APPROACH SLAB DETAILS 1

DATE: APRIL 2014 | JOB # BRM-1408(002) | SCALE: AS NOTED

SHEET 42 OF 68

oxd 04/21/14 5:51pm - \\bivfs1\project\V\ISSY00000002\0400CAD\EB\SHEETS\EB-AS-X-ISSY0002_01.dwg

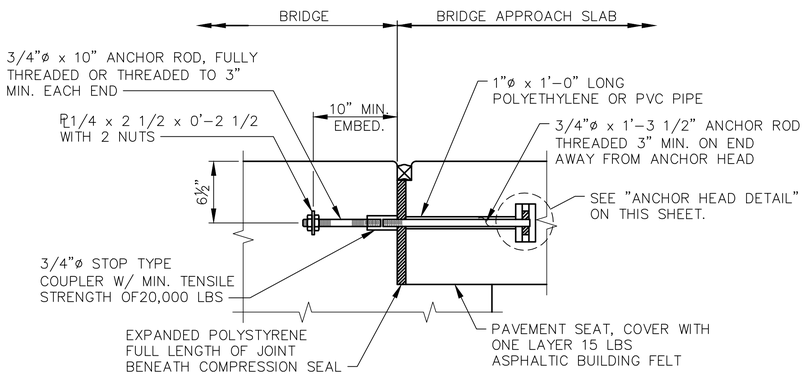

APPROACH ANCHOR – METHOD A

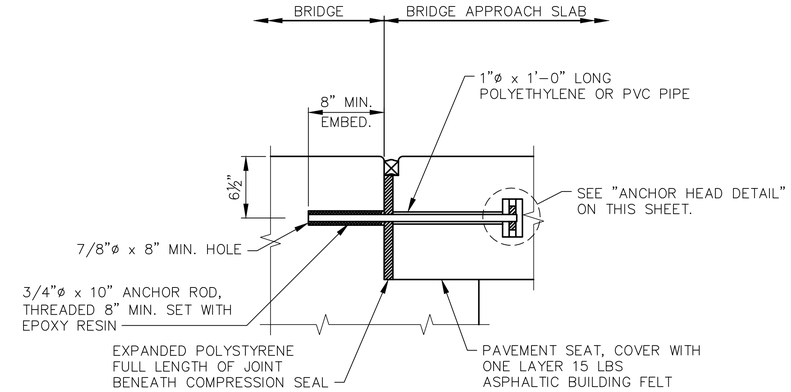

APPROACH ANCHOR – METHOD B

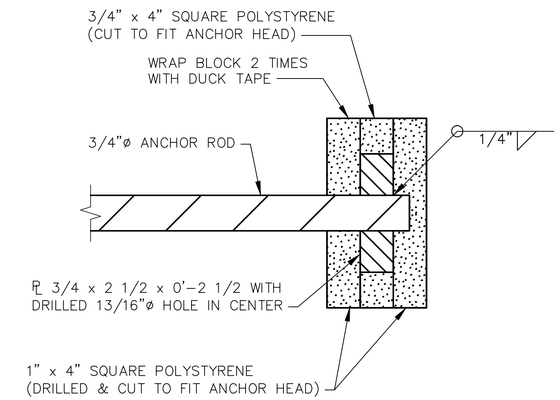

ANCHOR HEAD DETAIL

NOTE:
ALL METAL PARTS OF THE APPROACH EXPANSION ANCHOR SHALL RECEIVE ONE COAT OF PAINT CONFORMING TO STANDARD SPECIFICATION SECTION 9-08.1(2)F OR BE GALVANIZED IN ACCORDANCE WITH AASHTO M232.

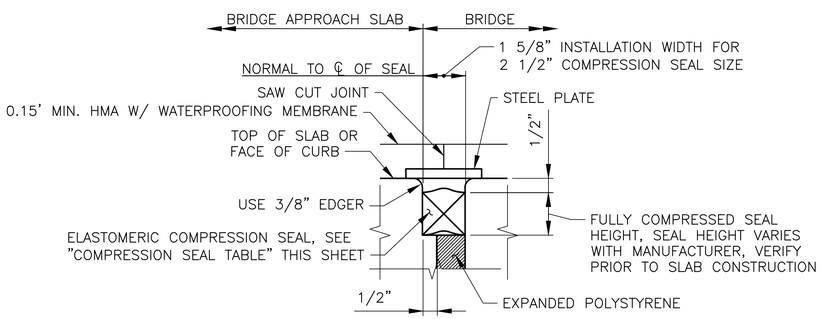

COMPRESSION SEAL DETAIL

EXPANSION JOINT AT BACK OF PAV'T SEAT

COMPRESSION SEAL TABLE

D.S. BROWN		WATSON BOWMAN ACME	
CV-2502	2 1/2"	WA-250	2 1/2"

TESTING SHALL BE PER AASHTO M-220 PRIOR TO USE.

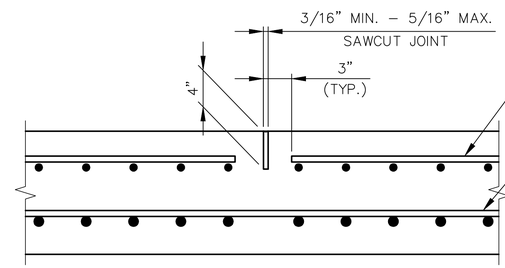

LONGITUDINAL JOINT DETAIL

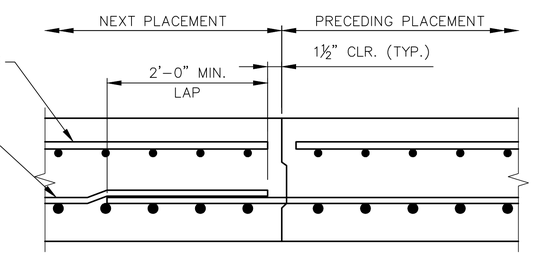

ALTERNATE LONGITUDINAL JOINT DETAIL

EDGE PRECEDING PLACEMENT ONLY WITH 1/8"ø RADIUS

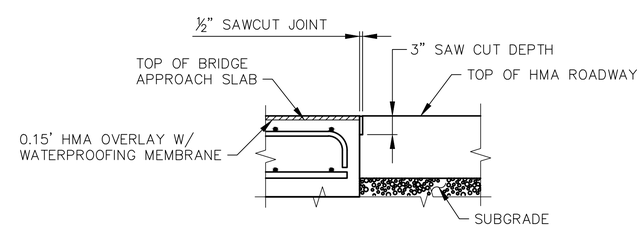

HMA ROADWAY JOINT DETAIL

SAWCUT SHALL BE FILLED WITH HOT-POURED COMPONENT IN ACCORDANCE WITH STANDARD SPECIFICATION SECTION 9-04.2(1) AND SEALED IN ACCORDANCE WITH STANDARD SPECIFICATION SECTION 5-05.3(8)B.

95% SUBMITTAL

DAVID EVANS AND ASSOCIATES INC.
415 - 118th Avenue SE
Bellevue Washington 98005-3518
Phone: 425.519.6500

NO.	DATE	DESCRIPTION	BY

DOGWOOD ST. BRIDGE REPLACEMENT

DRAWN EMB | DSGN. MCF | CHKD. JP

CITY OF ISSAQUAH

APPROACH SLAB DETAILS 2

DATE: APRIL 2014 | JOB # BRM-1408(002) | SCALE: AS NOTED

dwg 04/21/14 5:51pm – \\bivfs1\project\V:\ISSY000000002\04000CAD\EB\SHEETS\EB-AS-X-ISSY0002_02.dwg

S = Bar is included in substructure quantities
L = Lump sum quantity
T S or E = Tie, Stirrup or Earthquake
E = Bar is to be epoxy coated.
V = Bar dimensions vary between dimensions shown on this line and the following line.

MARK NO.	SEGMENT DIAPHRAGM LOCATION	SIZE	NO. REQUIRED	BEND TYPE	T, S or E	LUMP SUM	SUBSTR.	EPOXY COAT	VARIES	NO. EACH	U Ft.	U In.	W Ft.	W In.	X Ft.	X In.	Y Ft.	Y In.	Z Ft.	Z In.	Θ_1 Deg.	Θ_2 Deg.	LENGTH Ft.	LENGTH In.	WEIGHT Lbs.
	PIER 1 WALL																								
101	Pier Wall Vertical	6	130	50			S				6	7.0											6	7	1285
102	Pier Wall Horizontal	6	28	50			S				48	1.0											48	1	2022
103	Pier Wall Tie	5	405	58	T		S				2	9.0											3	7	1510
104	Pier Wall End Stirrup	6	28	56			S				2	8.0											4	4	183
105	End Diaphragm Horizontal	5	12	50							48	2.0											48	2	603
106	End Diaph Hor No Seat	5	2	50							8	0.0											8	0	17
107	End Diaph Tie at Seat	5	60	83	T						1	10.0	1	11.0									8	1	507
108	End Diaph Stirrup in Seat	5	60	71	T						1	0.0	2	0.0	2	0.0							4	6	281
109	End Diaph Stirrup W/ No Seat	5	14	83	T						3	0.0	1	10.0									10	3	150
110	End Dph End Hor Ties Bel Sea	4	8	71	T						1	10.0	1	0.0	1	0.0							2	12	16
111	End Dph End Hor Ties Abv St	4	4	71	T						1	0.0	1	0.0	1	0.0							2	6	7
112	End Dph SW Dowel	4	8	71	T						1	1.0	1	0.0	1	0.0							2	7	14
113	End Dph BO Hor. Added Bars	4	16	50	T						2	4.0											2	4	25
114	End Dph BO Diag. Added Bar	4	24	50	T						2	8.0											2	8	43
115	End Dph. BO Side Bars	4	16	71	T						2	8.0	1	9.0	1	9.0							4	12	53
116	End Dph H20 Line Diag	4	4	82							1	2.0	2	9.0	2	9.0	0	3.0	0	3.0	135	135	7	7	20
	PIER 2 WALL																								
201	Pier Wall Vertical	6	130	50			S				6	7.0											6	7	1285
202	Pier Wall Horizontal	6	28	50			S				48	1.0											48	1	2022
203	Pier Wall Tie	5	405	58	T		S				2	9.0											3	7	1510
204	Pier Wall End Stirrup	6	28	56			S				2	8.0											4	4	183
205	End Diaphragm Horizontal	5	12	50							48	2.0											48	2	603
207	End Diaph Tie at Seat	5	74	83	T						1	10.0	1	11.0									8	1	625
208	End Diaph Stirrup in Seat	5	74	71	T						1	0.0	2	0.0	2	0.0							4	6	346
209	End Diaph Stirrup W/ No Seat	5	14	83	T						3	0.0	1	10.0									10	3	150
210	End Dph End Hor Ties Bel Sea	4	8	71	T						1	10.0	1	0.0	1	0.0							2	12	16
211	End Dph End Hor Ties Abv St	4	4	71	T						1	0.0	1	0.0	1	0.0							2	6	7
212	End Dph SW Dowel	4	8	71	T						1	1.0	1	0.0	1	0.0							2	7	14
213	End Dph BO Hor. Added Bars	4	16	50	T						2	4.0											2	4	25
214	End Dph BO Diag. Added Bar	4	24	50	T						2	8.0											2	8	43
215	End Dph. BO Side Bars	4	16	71	T						2	8.0	1	9.0	1	9.0							4	12	53
216	End Dph H20 Line Diag	4	4	82							1	2.0	2	9.0	2	9.0	0	3.0	0	3.0	135	135	7	7	20
	WINGWALL																								
301	Vertical Bars	6	36	50			S		V	2	3	7.0											3	7	
											9	11.0											9	11	365
302	FF Horizontal Lower Bars	8	11	50			S				19	4.0											19	4	568
303	OF Horizontal Lower Bars	8	11	50			S				19	0.0											19	0	558
304	Horizontal Upper Bars	8	14	50			S		V	2	1	8.0											1	8	
											11	8.0											11	8	249
305	Top Diagonal	8	2	50			S				11	2.0											11	2	60
	INTERMEDIATE DIAPHRAGM																								
400	Horizontal Skin	4	54	50							3	11.0											3	11	141
401	Hor Bot Left	7	2	54							14	10.0											15	10	65
402	Stirrup	4	45	71							7	0.0	2	2.0	2	2.0							13	7	409
403	BO Hor. Added Bars	4	16	50	T						2	4.0											2	4	25
404	BO Diag. Added Bar	4	24	50	T						2	8.0											2	8	43
405	BO Side Bars	4	16	71	T						2	8.0	1	9.0	1	9.0							4	12	53
406	Horizontal Continuous Top	7	2	50							47	6.0											47	6	194
407	Doghouse Diagonal	7	2	50							47	6.0											47	6	194
408	Hor. Bar Between Girders	4	54	50							4	0.0											4	0	144
409	Hor Bot Right	7	2	54							5	2.0											6	2	25
410	Hor Bot Middle	7	4	54							7	7.0											8	7	70

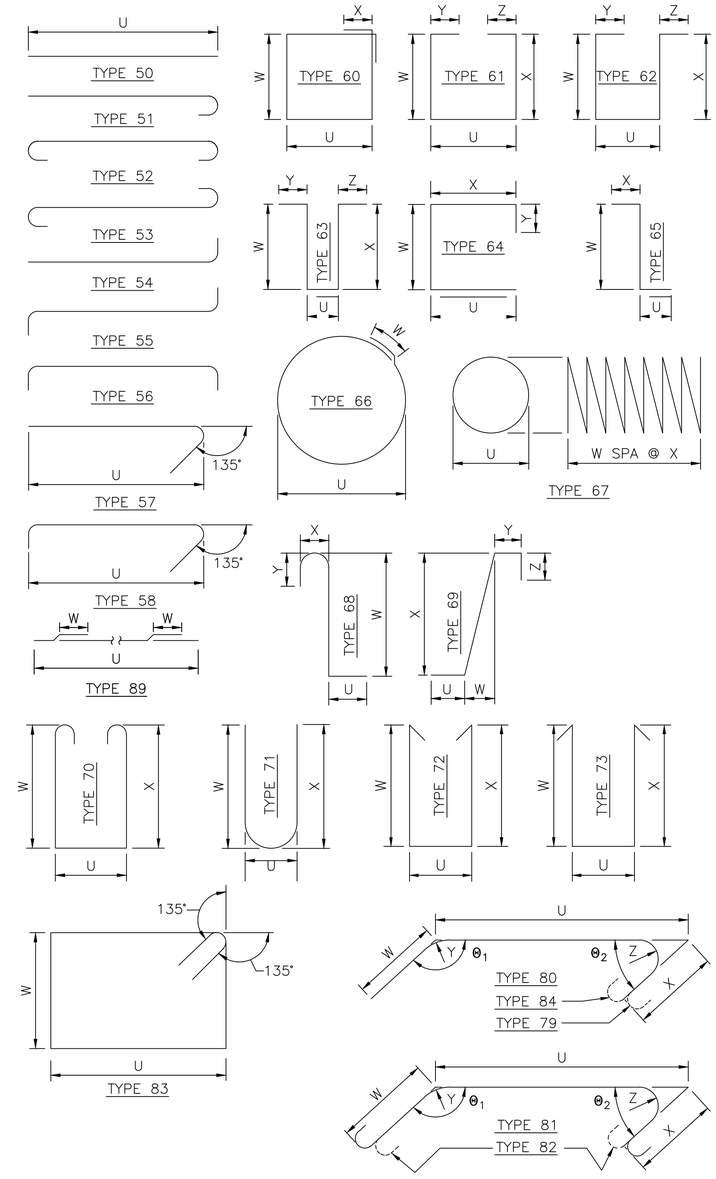

Summary of Quantities:

Substructure Mass:	11801	lb
Substructure w/Epoxy Mass:	0	lb
Superstructure Mass:	4,999	lb
Superstructure w/Epoxy Mass:	0	lb
Grand Total:	16,800	lb

NOTES:

1. ALL REINFORCING BARS ON THIS SHEET SHALL BE AASHTO M-31 UNLESS SHOWN OTHERWISE.
2. NUMBER AND LENGTH OF BARS TO BE DETERMINED BY THE CONTRACTOR FROM PLANS.
3. THE PURPOSE OF THIS BAR LIST IS TO ASSIST IN DETERMINING A SUFFICIENTLY APPROPRIATE VALUE FOR WEIGHT OF REINFORCING STEEL FOR BIDDING PURPOSES.

95% SUBMITTAL

DAVID EVANS AND ASSOCIATES INC.
415 - 118th Avenue SE
Bellevue Washington 98005-3518
Phone: 425.519.6500

NO.	DATE	DESCRIPTION	BY

DOGWOOD ST. BRIDGE REPLACEMENT

DRAWN EMB | DSGN. MCF | CHKD. JP

CITY OF ISSAQUAH

BARLIST

DATE: APRIL 2014 | JOB # BRM-1408(002) | SCALE: AS NOTED

oxo 04/21/14 5:52pm - \\bivis1\project1\ISSY00000002\040CAD\EB\SHEETS\EB-BX-X-ISSY0002.dwg

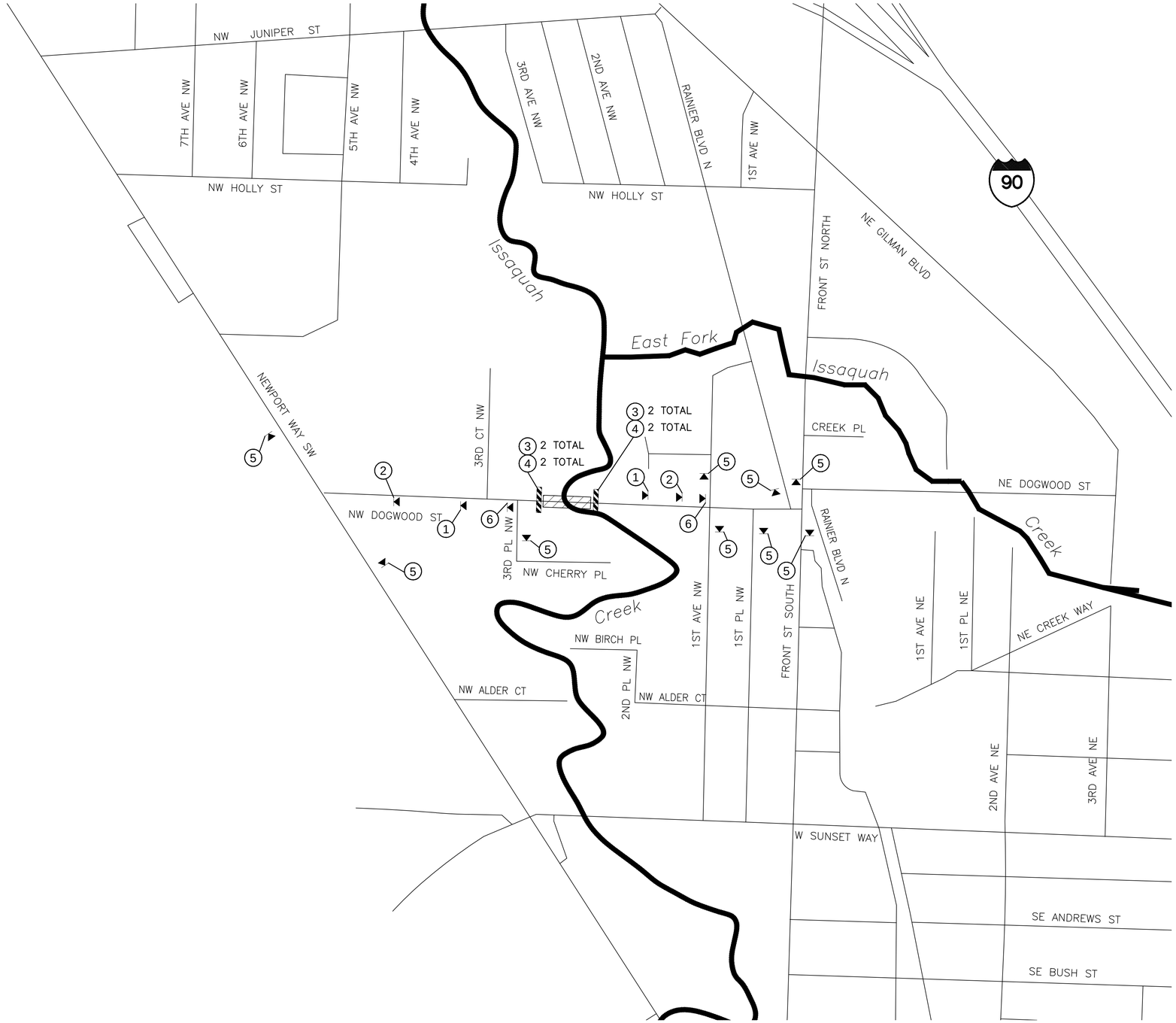

W20-3

1

W20-3

2

R11-2

3

R11-2
48" x 30"
(BLACK ON WHITE)

TYPE III-BARRICADE

4

5

(CONTRACTOR SHALL INSTALL
AT LEAST 2 WEEKS PRIOR
TO ROAD CLOSURES)

6

GENERAL NOTES

1. CONTRACTOR SHALL MAINTAIN ACCESS TO RESIDENTS AT ALL TIMES.
2. ALL SIGNS ARE BLACK ON ORANGE UNLESS OTHERWISE DESIGNATED.
3. ALL SIGNS SHALL BE POST MOUNTED.
4. THE CONTRACTOR SHALL FIELD VERIFY FINAL SIGN AND BARRICADE LOCATIONS WITH THE ENGINEER.

LEGEND

- SIGN LOCATION
- BARRICADE
- CLOSURE AREA

NOT TO SCALE

95% SUBMITTAL

DAVID EVANS
AND ASSOCIATES INC.
415 - 118th Avenue SE
Bellevue Washington 98005-3518
Phone: 425.519.6500

NO.	DATE	DESCRIPTION	BY

DRAWN OXA | DSGN. KXLA | CHKD. MLF

DOGWOOD ST. BRIDGE REPLACEMENT

CITY OF ISSAQUAH

MANUEL L. FELBERT, STATE OF WASHINGTON, 36546, REGISTERED PROFESSIONAL ENGINEER

TRAFFIC CONTROL PLAN

DATE: APRIL 2014 | JOB # BRM-1408(002) | SCALE: AS NOTED

SHEET 45 OF 68

oxa 04/21/14 5:52pm – \\blvfs1\project\V\VSSY00000002\0400CAD\TT\SHEETS\TTDTR001ISSY002.dwg

M4-9bL
(BLACK ON ORANGE)
1

M4-9bR
(BLACK ON ORANGE)
2

R11-2
3

R11-2
48" x 30"
(BLACK ON WHITE)

TYPE III-BARRICADE
4

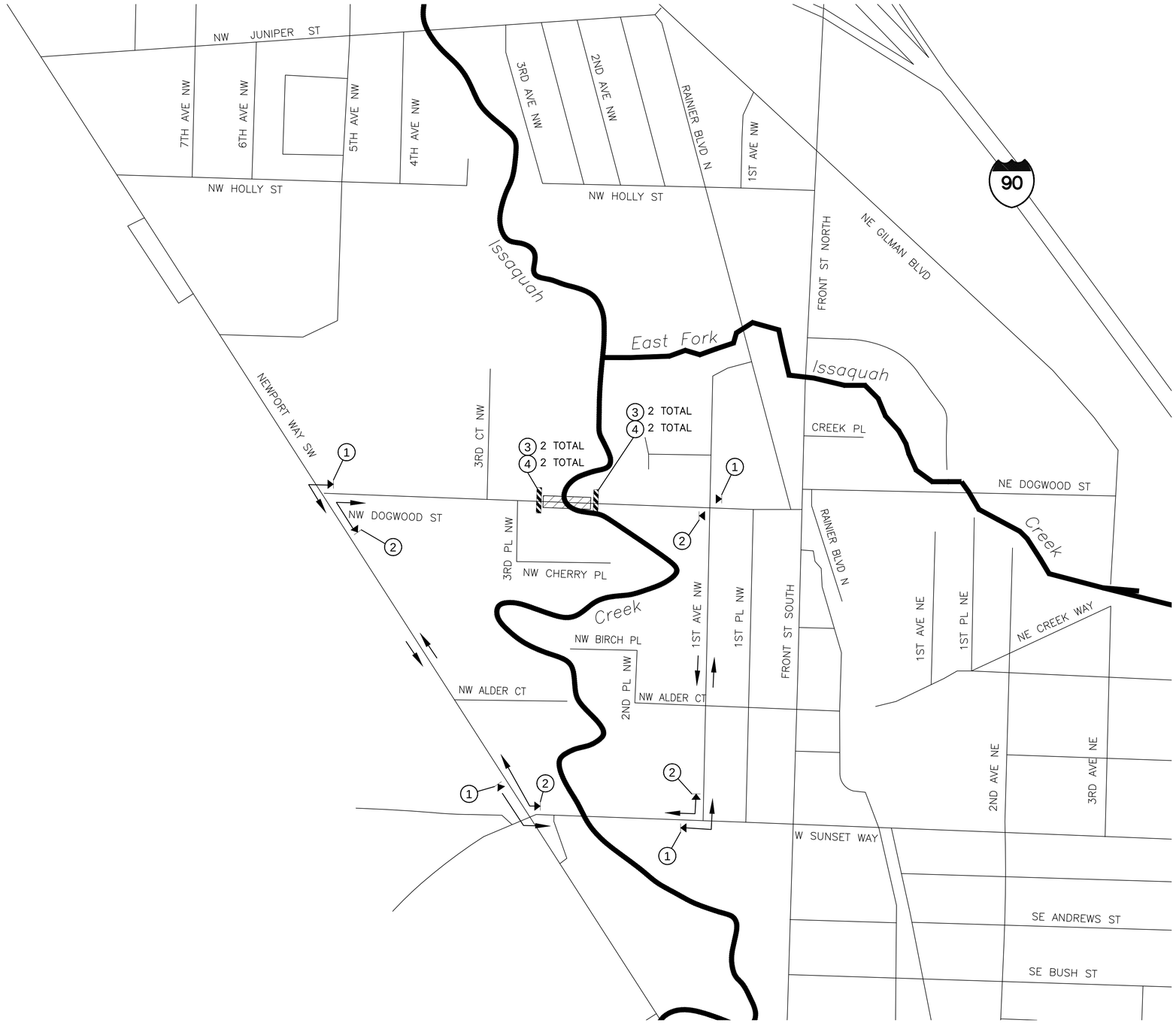

GENERAL NOTES

1. ALL SIGNS ARE BLACK ON ORANGE UNLESS OTHERWISE DESIGNATED.
2. THE CONTRACTOR SHALL FIELD VERIFY FINAL SIGN AND BARRICADE LOCATIONS WITH THE ENGINEER.

LEGEND

- SIGN LOCATION
- BARRICADE
- CLOSURE AREA

NOT TO SCALE

95% SUBMITTAL

DAVID EVANS AND ASSOCIATES INC.
415 - 118th Avenue SE
Bellevue Washington 98005-3518
Phone: 425.519.6500

NO.	DATE	DESCRIPTION	BY

DOGWOOD ST. BRIDGE REPLACEMENT

DRAWN OXA | DSGN. KXLA | CHKD. MLF

CITY OF ISSAQUAH

MANUEL L FELLIBERTI — STATE OF WASHINGTON — 36346 — REGISTERED PROFESSIONAL ENGINEER

PEDESTRIAN DETOUR PLAN

DATE: APRIL 2014 | JOB # BRM-1408(002) | SCALE: AS NOTED

oxa 04/21/14 5:52pm – \\blvfs1\project\V\ISSY00000002\04000CAD\TT\SHEETS\TTDTR002ISSY002.dwg

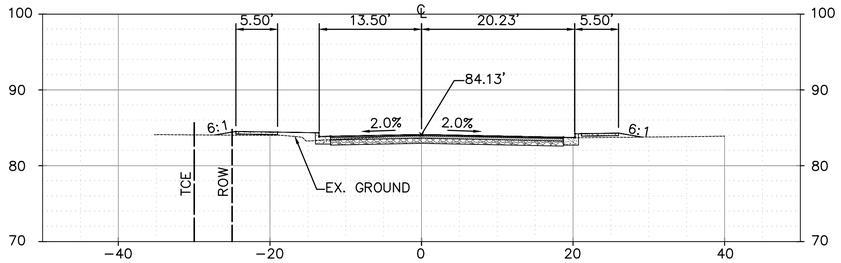

STA. 1+25.00

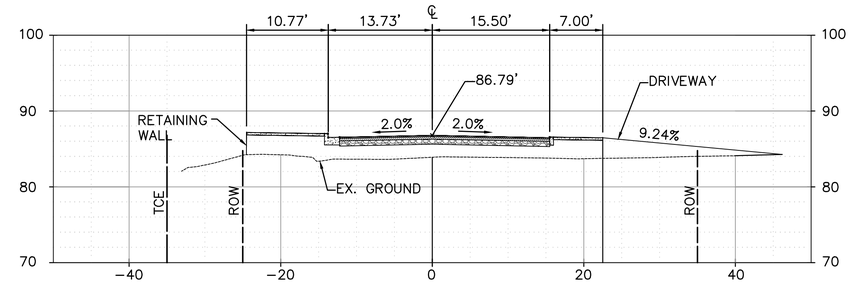

STA. 2+00.00

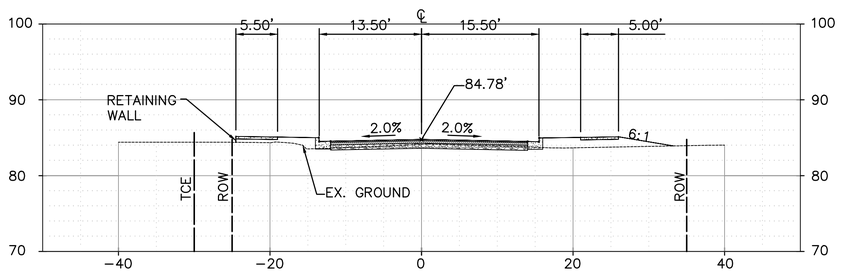

STA. 1+50.00

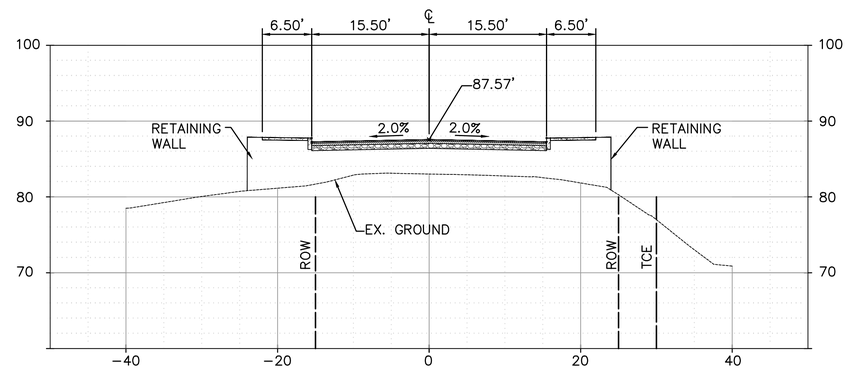

STA. 3+25.00

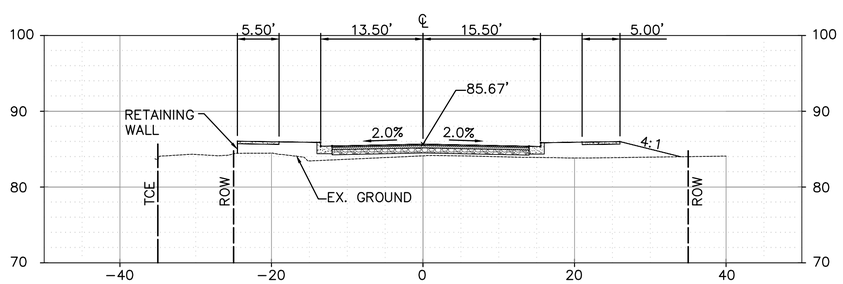

STA. 1+75.00

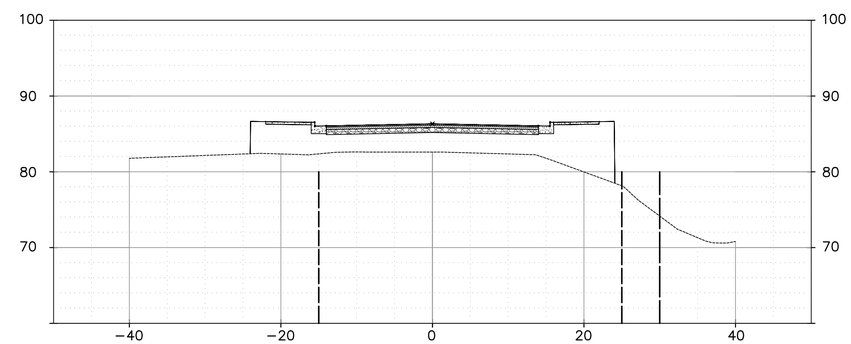

STA. 3+50.00

GRAPHIC SCALE

10 0 10 20

(IN FEET)

95% SUBMITTAL

DAVID EVANS AND ASSOCIATES INC.
415 - 118th Avenue SE
Bellevue Washington 98005-3518
Phone: 425.519.6500

NO.	DATE	DESCRIPTION	BY

DOGWOOD ST. BRIDGE REPLACEMENT

DRAWN OXA | DSGN. KXLA | CHKD. MLF

CITY OF ISSAQUAH

KAYLA MARIE PIROTTE — STATE OF WASHINGTON — 50489 — REGISTERED PROFESSIONAL ENGINEER

CROSS SECTIONS

DATE: APRIL 2014 | JOB # BRM-1408(002) | SCALE: AS NOTED

SHEET 47 OF 68

oxa 04/21/14 5:54pm – \\bivfs1\project\\ISSY00000002\04OOCAD\TT\SHEETS\TTCS001ISSY002.dwg

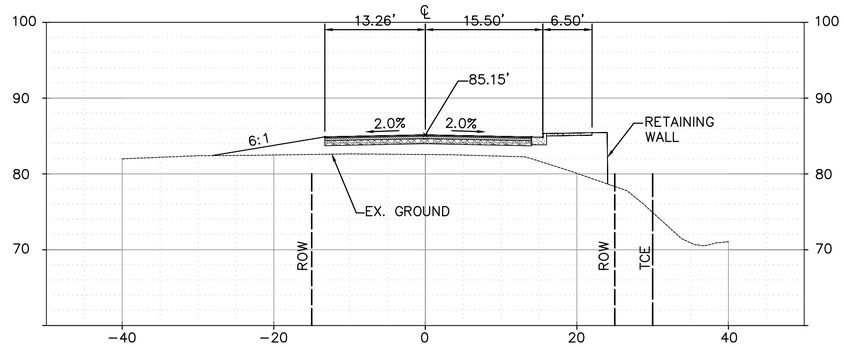

STA. 3+75.00

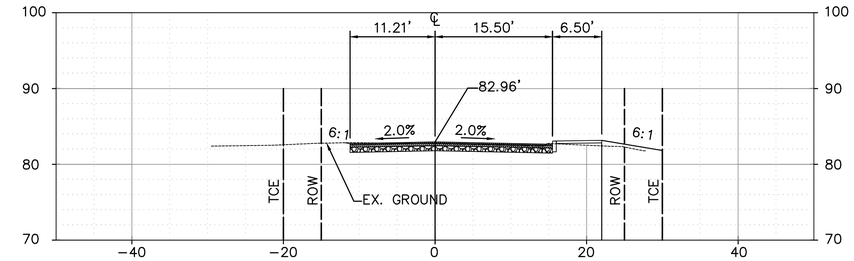

STA. 4+50.00

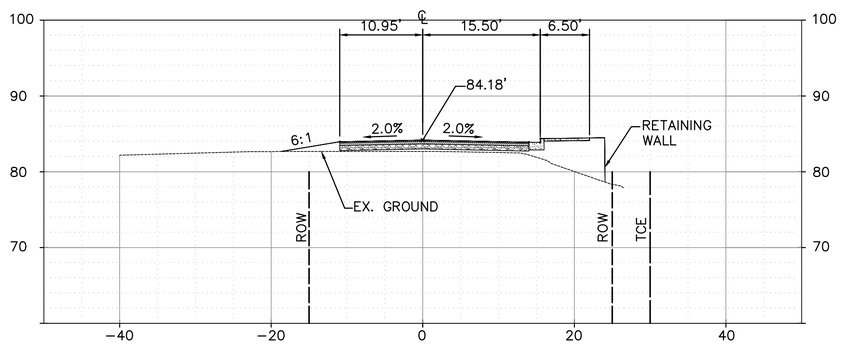

STA. 4+00.00

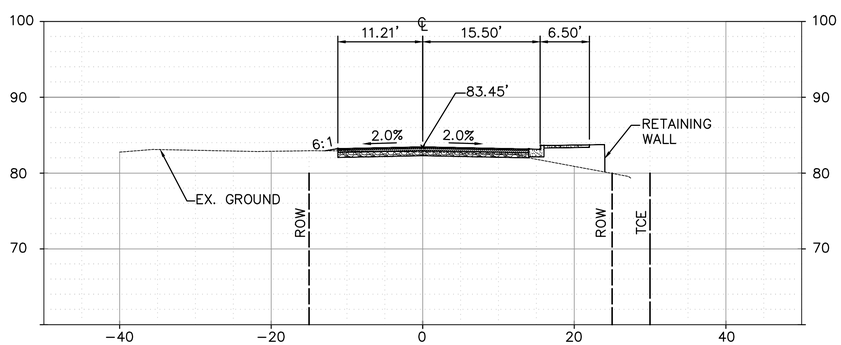

STA. 4+25.00

DAVID EVANS AND ASSOCIATES INC.
415 - 118th Avenue SE
Bellevue Washington 98005-3518
Phone: 425.519.6500

GRAPHIC SCALE
10 0 10 20
(IN FEET)

95% SUBMITTAL

NO.	DATE	DESCRIPTION	BY

DRAWN OXA | DSGN. KXLA | CHKD. MLF

DOGWOOD ST. BRIDGE REPLACEMENT

CITY OF ISSAQUAH

KAYLA MARIE PIROTTE
STATE OF WASHINGTON
50469
REGISTERED PROFESSIONAL ENGINEER

CROSS SECTIONS

DATE: APRIL 2014 | JOB # BRM-1408(002) | SCALE: AS NOTED

SHEET 48 OF 68

oxa 04/21/14 5:55pm – \\blvfs1\project\V\SSY00000002\04CAD\TT\SHEETS\TTCS001SSY002.dwg

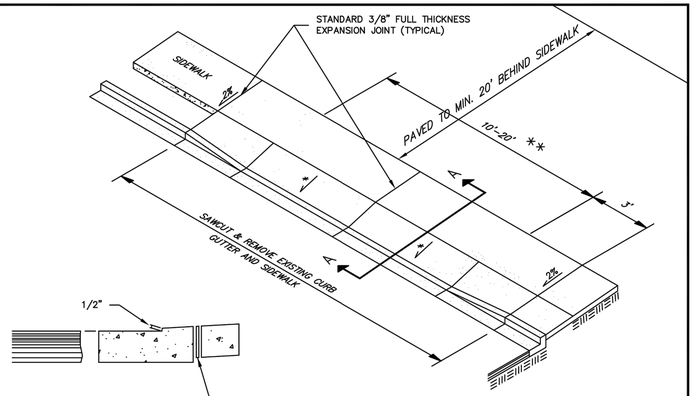

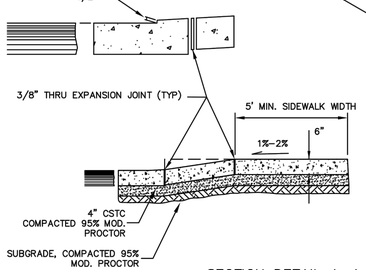

* APPROACH SLOPE VARIES WITH PLANTER WIDTH.

SECTION DETAIL A–A

NTS

NOTES:

1. ALL JOINTS SHALL BE CLEANED AND EDGED.
2. CONCRETE SHALL BE P.C.C. CLASS 3000, AIR ENTRAINED.
3. CONCRETE PAVEMENT SHALL BE BRUSHED TRANSVERSELY WITH A FIBER OR WIRE BRUSH OF A TYPE APPROVED BY THE ENGINEER.
4. 3/8" THRU EXPANSION JOINTS SHALL BE PLACED AT BACK, SIDES AND FRONT. MAXIMUM EXPANSION JOINT SPACING 10' CENTER TO CENTER.
5. DRIVEWAY SLOPE/ROUNDING SHALL BE EVALUATED FOR ACCESSIBILITY.

** DRIVEWAYS SERVING 3 OR MORE SINGLE FAMILY UNITS, NEED TO BE A MINIMUM OF 18' WIDE.

Back to Table of Contents

NO SCALE

CITY OF ISSAQUAH PUBLIC WORKS DEPARTMENT
AUGUST 2010

EXPIRES: EXPIRES: 12-13-2013

RESIDENTIAL DRIVEWAY APPROACH

NOTE: THE ORIGINAL IS SIGNED BY THE ENGINEER, APPROVED FOR PUBLICATION AND FILED AT THE CITY OF ISSAQUAH PUBLIC WORKS ENGINEERING OFFICE.

STANDARD DETAIL NO. T-05

REV:

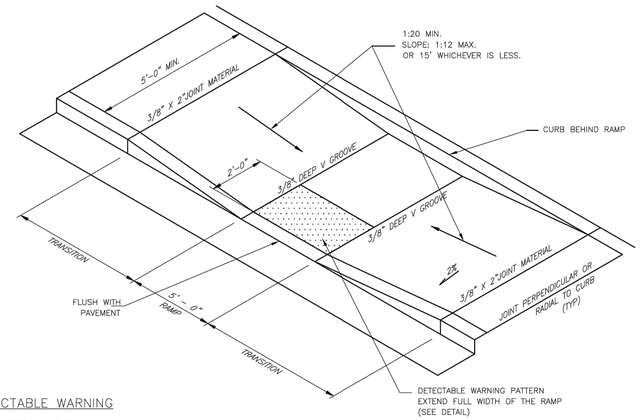

DETECTABLE WARNING PATTERN DETAIL

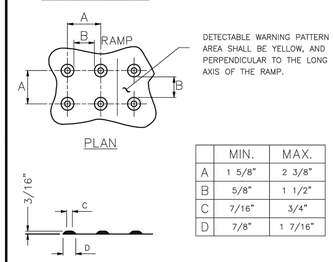

DETECTABLE WARNING PATTERN AREA SHALL BE YELLOW, AND PERPENDICULAR TO THE LONG AXIS OF THE RAMP.

PLAN

ELEVATION

TRUNCATED DOMES (SEE NOTE 3)

	MIN.	MAX.
A	1 5/8"	2 3/8"
B	5/8"	1 1/2"
C	7/16"	3/4"
D	7/8"	1 7/16"

NOTES:

1. INSTALL WHEELCHAIR RAMP AS LOCATED ON APPROVED PLANS OR AS DIRECTED BY THE TRAFFIC ENGINEER.
2. SEE T–07 FOR CURB RAMP LAYOUT.
3. DETECTABLE WARNING PATTERNS MAY BE CREATED BY METHODS THAT WILL ACHIEVE THE TRUNCATED DOME DIMENSIONS, COLOR AND SPACING SHOWN AS DIRECTED BY THE PLANS OR THE TRAFFIC ENGINEER.
4. REFER TO WSDOT SIDEWALK RAMP STANDARD PLANS AS DIRECTED BY CITY TRAFFIC ENGINEER FOR ALTERNATE PARALLEL CURB RAMP DETAILS.

Back to Table of Contents

PARALLEL CURB RAMP DETAILS

NO SCALE

NO SCALE

CITY OF ISSAQUAH PUBLIC WORKS DEPARTMENT
AUGUST 2010

EXPIRES: EXPIRES: 12-13-2013

PARALLEL CURB RAMP

NOTE: THE ORIGINAL IS SIGNED BY THE ENGINEER, APPROVED FOR PUBLICATION AND FILED AT THE CITY OF ISSAQUAH PUBLIC WORKS ENGINEERING OFFICE.

STANDARD DETAIL NO. T-09

REV:

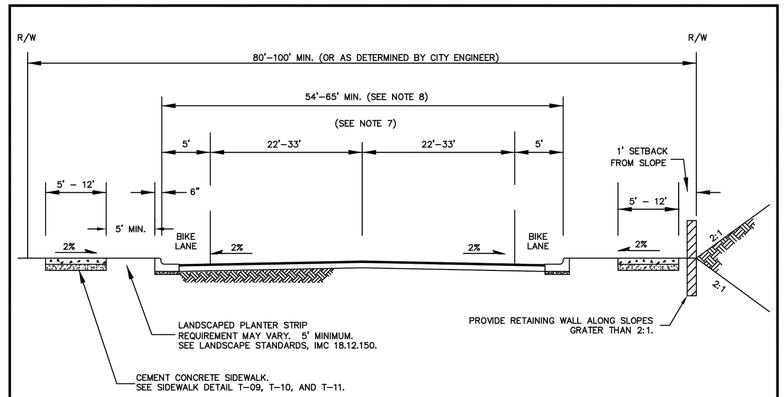

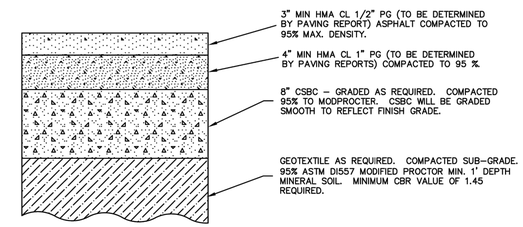

MINIMUM ROAD SECTION

SOILS TYPE, TRUCK AND BUS LOADING MAY REQUIRE ADDITIONAL SECTIONS. REFER TO CLASSIFIED ROUTES.

NOTE:

1. STANDARD T–23 FOR ON STREET PARKING AND BIKE LANE REQUIREMENTS.
2. GEOTEXTILE MAY BE REQUIRED AS DIRECTED.
3. ADDITIONAL SUB–GRADE STABILIZATION TECHNOLOGIES MAY BE REQUIRED.
4. 20' CLEAR DRIVE WIDTH IS REQUIRED ON ALL STREETS FOR FIRE APPARATUS, AND FOR FIRE APPARATUS ACCESS ROADS.
5. "NO PARKING FIRE LANE" DESIGNATIONS MAY BE REQUIRED BY THE FIRE DEPARTMENT.
6. DEAD END FIRE ACCESS ROADS LONGER THAN 150' REQUIRE AN APPROVED TURN AROUND AT THE END. SEE STANDARD T–16.
7. REQUIRED NUMBER OF LANES AND ROADWAY WIDTH WILL VARY DEPENDING ON TRAFFIC VOLUME AND SAFETY CAPACITY.
8. WIDTH VARIES DEPENDING ON A 4–LANE OR 5–LANE SECTION.
9. FOR PAVED SECTIONS, PROVIDE SUPPORTING DOCUMENTATION JUSTIFYING DESIGNED STRUCTURAL SECTION OF CITY.

Back to Table of Contents

NO SCALE

CITY OF ISSAQUAH PUBLIC WORKS DEPARTMENT
AUGUST 2010

EXPIRES: EXPIRES: 12-13-2013

TYPICAL MINOR ARTERIAL STREET

NOTE: THE ORIGINAL IS SIGNED BY THE ENGINEER, APPROVED FOR PUBLICATION AND FILED AT THE CITY OF ISSAQUAH PUBLIC WORKS ENGINEERING OFFICE.

STANDARD DETAIL NO. T-13

REV: 11-10-11

95% SUBMITTAL

DAVID EVANS AND ASSOCIATES INC.
415 - 118th Avenue SE
Bellevue Washington 98005-3518
Phone: 425.519.6500

NO.	DATE	DESCRIPTION	BY

DRAWN OXA | DSGN. KXLA | CHKD. MLF

DOGWOOD ST. BRIDGE REPLACEMENT

CITY OF ISSAQUAH

KAYLA MARIE PLEOTTE — STATE OF WASHINGTON — 50489 — REGISTERED PROFESSIONAL ENGINEER

STANDARD DETAILS

DATE: APRIL 2014 | JOB # BRM–1408(002) | SCALE: AS NOTED

oxa 04/21/14 5:55pm – \\bivfs1\project\V\SSY00000002\DA00CAD\TT\SHEETS\TTST001SSY002.dwg

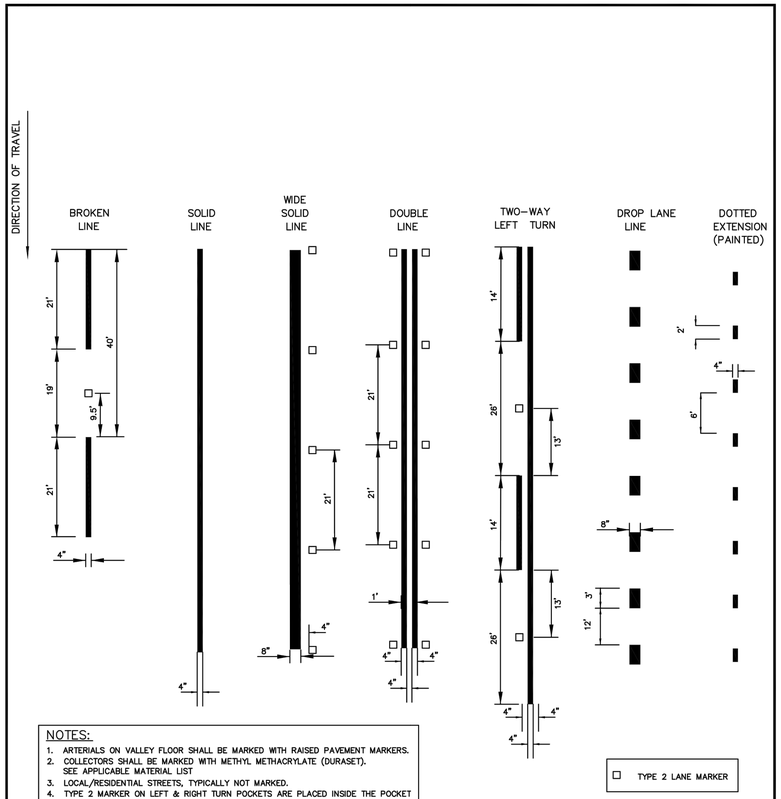

NOTES:

1. ARTERIALS ON VALLEY FLOOR SHALL BE MARKED WITH RAISED PAVEMENT MARKERS.
2. COLLECTORS SHALL BE MARKED WITH METHYL METHACRYLATE (DURASET). SEE APPLICABLE MATERIAL LIST
3. LOCAL/RESIDENTIAL STREETS, TYPICALLY NOT MARKED.
4. TYPE 2 MARKER ON LEFT & RIGHT TURN POCKETS ARE PLACED INSIDE THE POCKET SIDE OF THE 8" STRIPE.

Back to Table of Contents

NO SCALE

CITY OF ISSAQUAH PUBLIC WORKS DEPARTMENT AUGUST 2010

CHANNELIZATION - METHYL METHACRYLATE MARKINGS

NOTE: THE ORIGINAL IS SIGNED BY THE ENGINEER, APPROVED FOR PUBLICATION AND FILED AT THE CITY OF ISSAQUAH PUBLIC WORKS ENGINEERING OFFICE.

STANDARD DETAIL NO. T-19

REV: 11-10-11

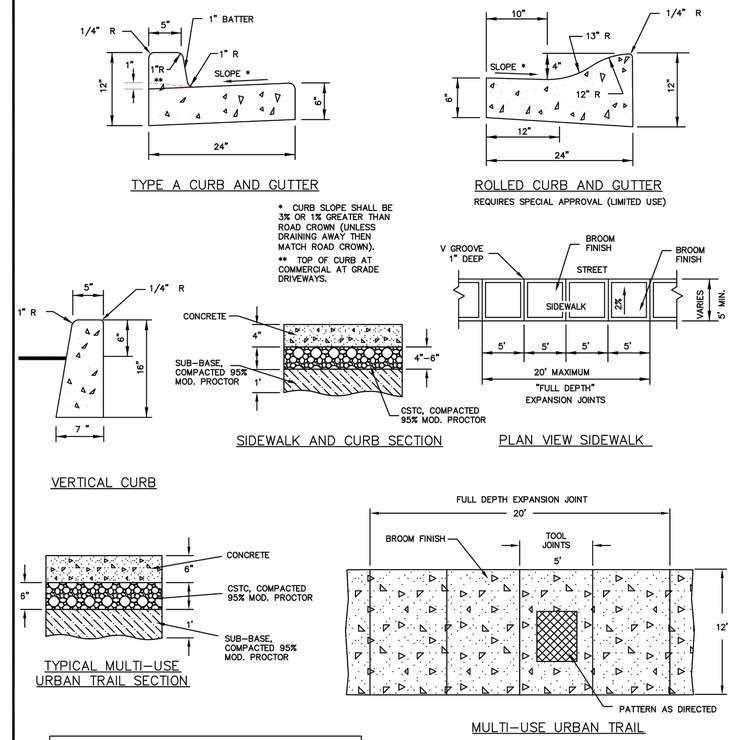

NOTES:

1. MATERIAL – CONCRETE SHALL BE CLASS 3000, AIR ENTRAINED.
2. ALL MATERIAL SHALL BE TESTED PER ASTM C150 TYPE II.
3. ALL SIDEWALKS SHALL MEET ADA REQUIREMENTS.
4. DYED CONCRETE SHALL BE SEALED.
5. PATTERNS MAY VARY BY LOCATION.
6. PAVERS ARE NOT ALLOWED.

MINIMUM WIDTHS	
SIDEWALK – STANDARD	5'
SIDEWALK – COMMERCIAL	8'
URBAN TRAIL	12'

Back to Table of Contents

NO SCALE

CITY OF ISSAQUAH PUBLIC WORKS DEPARTMENT AUGUST 2010

SIDEWALKS/CURBS/URBAN TRAILS

NOTE: THE ORIGINAL IS SIGNED BY THE ENGINEER, APPROVED FOR PUBLICATION AND FILED AT THE CITY OF ISSAQUAH PUBLIC WORKS ENGINEERING OFFICE.

STANDARD DETAIL NO. T-38

REV:

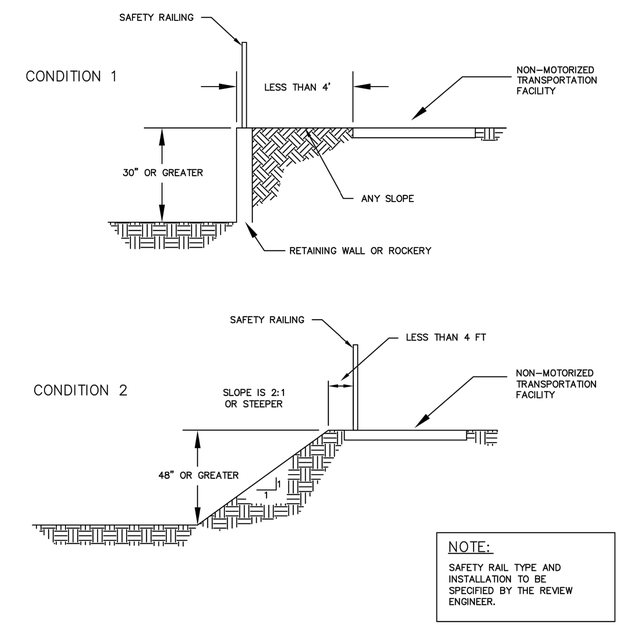

NOTE:

SAFETY RAIL TYPE AND INSTALLATION TO BE SPECIFIED BY THE REVIEW ENGINEER.

Back to Table of Contents

NO SCALE

CITY OF ISSAQUAH PUBLIC WORKS DEPARTMENT AUGUST 2010

CONDITIONS REQUIRING SAFETY RAILINGS

NOTE: THE ORIGINAL IS SIGNED BY THE ENGINEER, APPROVED FOR PUBLICATION AND FILED AT THE CITY OF ISSAQUAH PUBLIC WORKS ENGINEERING OFFICE.

STANDARD DETAIL NO. T-40

REV:

95% SUBMITTAL

DAVID EVANS AND ASSOCIATES INC.
415 - 118th Avenue SE
Bellevue Washington 98005-3518
Phone: 425.519.6500

NO.	DATE	DESCRIPTION	BY

DRAWN OXA | DSGN. KXLA | CHKD. MLF

DOGWOOD ST. BRIDGE REPLACEMENT

CITY OF ISSAQUAH

KAYLA MARIE PIAOTTE STATE OF WASHINGTON 50489 REGISTERED PROFESSIONAL ENGINEER

STANDARD DETAILS

DATE: APRIL 2014 | JOB # BRM-1408(002) | SCALE: AS NOTED

oxa 04/21/14 5:55pm – \\bivfs1\project\V\ISSY00000002\0400CAD\TT\SHEETS\TTST0029SSY002.dwg

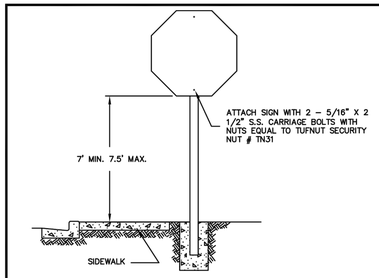

TYPICAL INSTALLATION WITH ADJACENT SIDEWALK

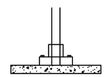

PROVIDE ALTERNATE INSTALLATION FOR MOUNTING TO SIDEWALK
QUICK PUNCH SURFACE MOUNT
#12101600

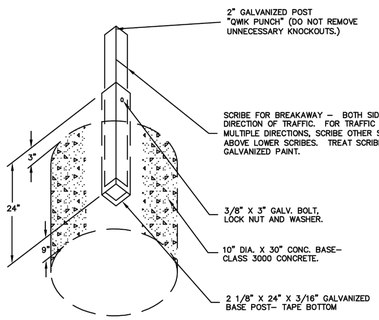

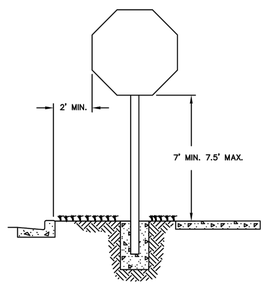

TYPICAL INSTALLATION
PARKWAY AREA

NOTES:

1. ALL SIGNS SHALL BE PER MUTCD UNLESS OTHERWSE APPROVED OR DIRECTED BY THE CITY ENGINEER.
2. STREET NAME SIGNS MAY BE INSTALLED AT THE TOP OF SIGN POSTS (SEE STANDARD DETAIL T–45).
3. POSTS SHALL BE INSTALLED PLUMB.
4. SEAMED CORNER– RIGHT SIDE FACING SIGN.
5. ALL PUBLIC STOP SIGNS SHALL BE 30"X30".
6. SIGN SHEETING SHALL BE DIAMOND GRADE.

Back to Table of Contents

NO SCALE

CITY OF ISSAQUAH PUBLIC WORKS DEPARTMENT
AUGUST 2010

EXPIRES:
EXPIRES: 12-13-2011

TRAFFIC SIGN INSTALLATION

NOTE: THE ORIGINAL IS SIGNED BY THE ENGINEER, APPROVED FOR PUBLICATION AND FILED AT THE CITY OF ISSAQUAH PUBLIC WORKS ENGINEERING OFFICE.

STANDARD DETAIL NO. T-44
REV:

DESIGNATION ABBREVIATIONS:

STREET=	St
AVENUE=	Ave
PLACE=	Pl
WAY=	Way
BOULEVARD=	Blvd
PARKWAY=	Pkwy
LANE=	Ln
COURT=	Ct
DRIVE=	Dr
ROAD=	Rd
KEY=	Key
CONNECTOR=	Conn
CIRCLE=	Cir

SIGN:
SHEET ALUMINUM, .080 GAUGE, SIZED AS NEEDED W/ ROUNDED CORNERS.

BACKGROUND:
GREEN REFLECTIVE 3M HIGH INTENSITY PRISMATIC OR DIAMOND GRADE "SHEETING".

LETTERS – WHITE REFLECTIVE HIGH INTENSITY:
COLLECTOR & LOCAL ACCESS INTERSECTIONS: 4" SERIES C (FIRST LETTER U.C.). QUADRANT, DESIGNATION, SUFFIX, 3" SERIES C (FIRST LETTER U.C.).

ARTERIAL INTERSECTIONS AND ARTERIAL/COLLECTOR INTERSECTIONS: 6" SERIES C. QUADRANT, DESIGNATION, SUFFIX, 4" SERIES C (FIRST LETTER U.C.).

BORDER: SCREEN PRINT:
5/16" WIDE WITH 3/4" RADIUS ON CORNER.

BLOCK NUMBERS:
BLOCK NUMBERS ARE REQUIRED ON STREET NAME SIGNS FOR ALL NAMED STREETS NOT REQUIRED ON NUMBERED STREETS.

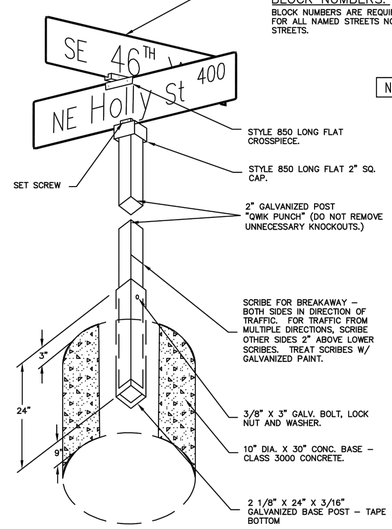

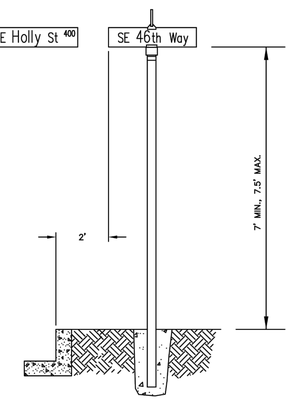

TYPICAL INSTALLATION WITHOUT ADJACENT SIDEWALK

NOTES:

1. ALL SIGNS SHALL BE PER MUTCD UNLESS OTHERWSE APPROVED OR DIRECTED BY THE CITY ENGINEER.
2. POSTS SHALL BE INSTALLED PLUMB.
3. SEAMED CORNER – RIGHT SIDE FACING SIGN.
4. PRIVATE – "Private Street"

Back to Table of Contents

NO SCALE

CITY OF ISSAQUAH PUBLIC WORKS DEPARTMENT
AUGUST 2010

EXPIRES:
EXPIRES: 12-13-2011

GROUND MOUNT STREET SIGN DETAILS

NOTE: THE ORIGINAL IS SIGNED BY THE ENGINEER, APPROVED FOR PUBLICATION AND FILED AT THE CITY OF ISSAQUAH PUBLIC WORKS ENGINEERING OFFICE.

STANDARD DETAIL NO. T-45
REV:

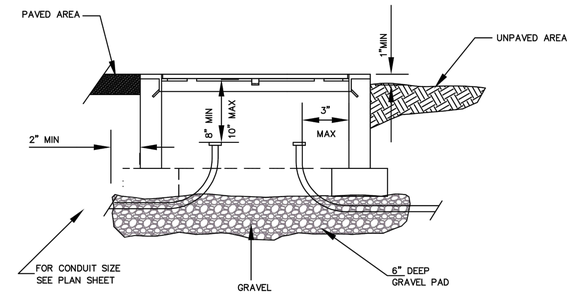

TYP J-BOX INSTALLATION

NOTES:

1. ALL DIMENSIONS ARE MINIMUM. EXACT CONFIGURATIONS VARY AMONG DIFFERENT MANUFACTURERS.
2. THE NOTED LID THICKNESSES ARE OVERALL MINIMUMS. THE DIAMOND PATTERN FOR TYPE 1 OR TYPE 2 BOXES SHALL BE 28% MINIMUM OF OVERALL THICKNESS. THE DIAMOND PATTERN FOR TYPE 8 BOXES SHALL BE 3/32" MINIMUM THICK.
3. LID SUPPORT MEMBERS SHALL BE WELDED TO FRAME.
4. 4000 PSI CONCRETE IS ALLOWED IF BOX REINFORCEMENT CONSISTS OF 6x6 – W3xW3 WELDED WIRE FABRIC WELDED TO THE FRAME.
5. WHEN NOTED IN THE CONTRACT TYPE 2 AND TYPE 8 BOXES SHALL BE PROVIDED WITH 12" DEEP EXTENSION BOXES.
6. WHEN NOTED IN THE CONTRACT TYPE 2 BOXES SHALL BE PROVIDED WITH A 10"x27 1/2" 10 GAGE DIVIDER PLATE COMPLETE WITH FASTENERS.
7. NON CONCRETE BOXES MAY BE SUBMITTED FOR APPROVAL EVALUATION WILL INCLUDE AN H–20 LOAD TEST.
8. ALL BOXES WILL BE CITY OF ISSAQUAH ENGINEER APPROVED AND CERTIFIED.
9. LEGEND FOR TRAFFIC SIGNAL SYSTEM BOXES WILL BE "TS", AND "LT" FOR ILLUMINATION SYSTEMS. LEGEND FOR COMMUNICATIONS OR FIBER SYSTEM BOXES WILL BE "COM". LEGEND LETTERS WILL BE FORMED WITH 1/8" WELD BEAD. GRIND OFF DIAMOND PATTERN BEFORE FORMING LETTERS.
10. JUNCTION BOXES WITHIN SIDEWALK SHALL HAVE NO–SKID LIDS.

Back to Table of Contents

NO SCALE

CITY OF ISSAQUAH PUBLIC WORKS DEPARTMENT
AUGUST 2010

EXPIRES:
EXPIRES: 12-13-2011

TRAFFIC SIGNAL JUNCTION BOX DETAILS

NOTE: THE ORIGINAL IS SIGNED BY THE ENGINEER, APPROVED FOR PUBLICATION AND FILED AT THE CITY OF ISSAQUAH PUBLIC WORKS ENGINEERING OFFICE.

STANDARD DETAIL NO. TS-06
REV:

95% SUBMITTAL

DAVID EVANS AND ASSOCIATES INC.
415 - 118th Avenue SE
Bellevue Washington 98005-3518
Phone: 425.519.6500

NO.	DATE	DESCRIPTION	BY

DOGWOOD ST. BRIDGE REPLACEMENT

DRAWN OXA | DSGN. KXLA | CHKD. MLF

CITY OF ISSAQUAH

KAYLA MARIE PROUTY, STATE OF WASHINGTON, 50489, REGISTERED PROFESSIONAL ENGINEER

STANDARD DETAILS

DATE: APRIL 2014 | JOB # BRM–1408(002) | SCALE: AS NOTED

oxa 04/21/14 5:55pm – \\bivis1\project\\ISSY00000002\0400CAD\TT\SHEETS\TTST003SSY002.dwg

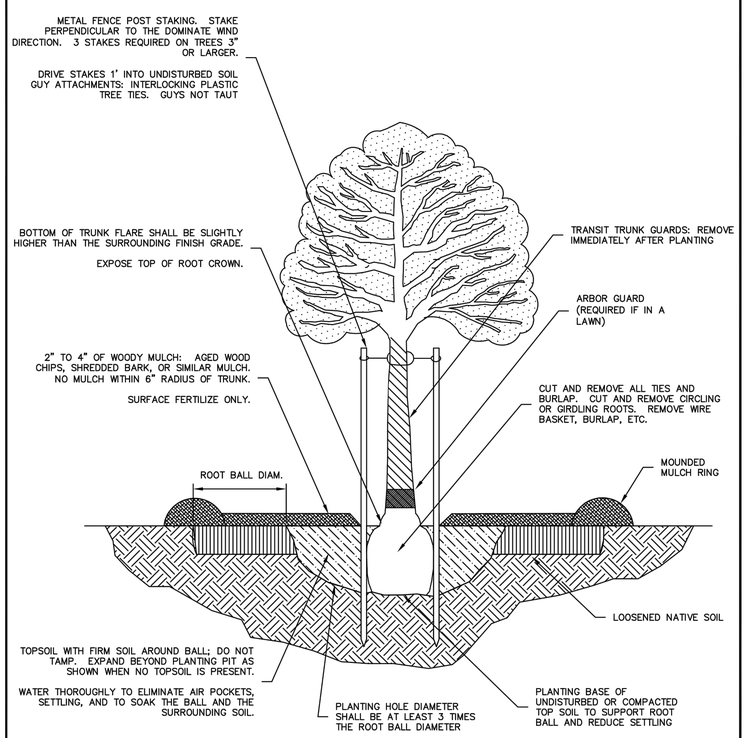

APPROVED	DEPT.	DATE

NOTES:

1. TREE LOCATION TO BE VERIFIED NOT TO CONFLICT WITH UNDERGROUND UTILITIES A MIN. OF 3 FT CLEAR ZONE EACH SIDE.

NO SCALE

CITY OF ISSAQUAH
PUBLIC WORKS DEPARTMENT
APRIL 2010

Back to Table of Contents

TREE PLANTING DETAIL

NOTE: THE ORIGINAL IS APPROVED FOR PUBLICATION BY PARKS DEPARTMENT AND FILED AT THE CITY OF ISSAQUAH PUBLIC WORKS ENGINEERING OFFICE.

STANDARD DETAIL NO. L-01

REV:

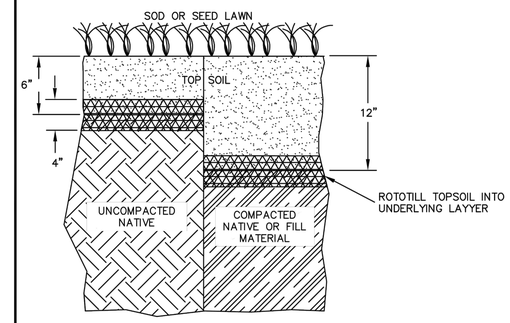

TOP SOIL REQUIREMENTS FOR LAWNS

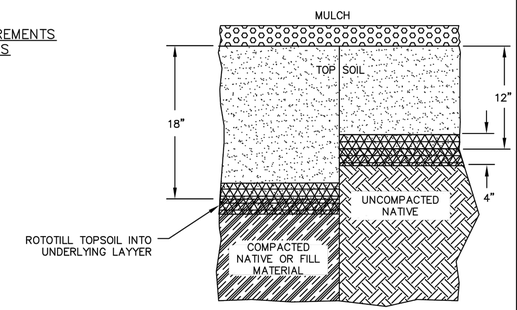

TOP SOIL REQUIREMENTS FOR TREE AND SHRUB BEDS

APPROVED	DEPT.	DATE

NOTES:

1) ALL PLANT MATERIALS TO MEET THE AMERICAN STANDARD FOR NURSERY STOCK, ANSI Z80.1–1900 OR MOST CURRENT VERSION.
2) PLANT, MAINTAIN AND WARRANTY AS PER SPECIAL PROVISIONS.
3) DO NOT SUBSTITUE SPECIES WITHOUT ENGINEER APPROVAL.

Back to Table of Contents

NO SCALE

CITY OF ISSAQUAH
PUBLIC WORKS DEPARTMENT
APRIL 2010

TOP SOIL REQUIREMENTS FOR COMPACTED AND NON-COMPACTED SOILS

NOTE: THE ORIGINAL IS APPROVED FOR PUBLICATION BY PARKS DEPARTMENT AND FILED AT THE CITY OF ISSAQUAH PUBLIC WORKS ENGINEERING OFFICE.

STANDARD DETAIL NO. L-02

REV:

95% SUBMITTAL

DAVID EVANS AND ASSOCIATES INC.
415 - 118th Avenue SE
Bellevue Washington 98005-3518
Phone: 425.519.6500

NO.	DATE	DESCRIPTION	BY

DOGWOOD ST. BRIDGE REPLACEMENT

DRAWN OXA | DSGN. KXLA | CHKD. MLF

CITY OF ISSAQUAH

KAYLA MARIE PIRUTTE, STATE OF WASHINGTON, 50489, REGISTERED PROFESSIONAL ENGINEER

STANDARD DETAILS

DATE: APRIL 2014 | JOB # BRM–1408(002) | SCALE: AS NOTED

oxa 04/21/14 5:55pm – \\blvfs1\project\V\VSSY00000002\0400CAD\TT\SHEETS\TTST1004SSY002.dwg

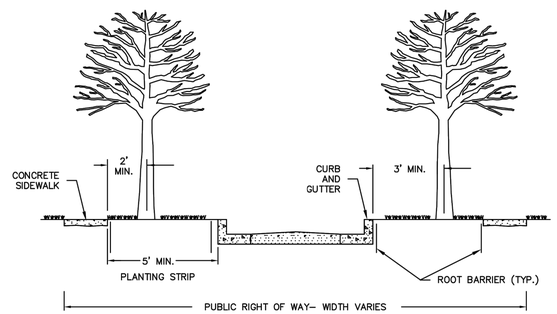

NOTES:
1. TREE SPACING IS DEPENDANT ON THE SIZE AND TYPE OF STREET TREE USED. SEE CONTRACT FOR SPACING.
2. TREES SHALL NOT BE PLACED IN SIGHT DISTANCE TRIANGLES PER MOST CURRENT VERSION OF AMERICAN ASSOCIATION OF STATE HIGHWAY AND TRANSPORTATION OFFICIALS (AASHTO) OR CITY STANDARDS.
3. COORDINATE WITH TRAFFIC SIGNAL ENGINEER SO THAT TREES DO NOT OBSTRUCT OPERATIONS OF TRAFFIC SIGNAL SYSTEMS.
4. PLANTING STRIP IRRIGATION SYSTEMS SHALL MEET IRRIGATION STANDARD AND INCORPORATE LATEST WATER CONSERVATION TECHNIQUES.
5. STREET TREES SHALL HAVE A MINIMUM OVERHEAD CLEARANCE OF SEVEN (7) FEET OVER PEDESTRIAN PATHWAYS AND FOURTEEN (14) FEET OVER STREETS. STREET TREES SHALL BE CENTERED A MINIMUM OF THIRTY (30) FEET FROM INTERSECTIONS, TWENTY (20) FEET FROM STREET LIGHTS, THREE (3) FEET FROM CURBS AND TWO (2) FEET FROM SIDEWALKS OR AS OTHERWISE APPROVED BY THE CITY.
6. STREET TREES SHALL BE PLANTED IN A PLANTING STRIP WITH A MINIMUM OF FIVE (5) FEET BETWEEN THE SIDEWALK AND THE BACK OF THE CURB
7. TREE PIT AREA SHALL BE A MINIMUM OF 24 SQUARE FEET.
8. ROOT BARRIER SHALL EXTEND A MINIMUM OF 5 FEET BEYOND TREE (REFER TO MANUFACTURERS DETAIL).

APPROVED	DEPT.	DATE

Back to Table of Contents

NO SCALE

CITY OF ISSAQUAH
PUBLIC WORKS DEPARTMENT
APRIL 2010

TYPICAL STREET TREE LOCATION REQUIREMENTS

NOTE: THE ORIGINAL IS APPROVED FOR PUBLICATION BY PARKS DEPARTMENT AND FILED AT THE CITY OF ISSAQUAH PUBLIC WORKS ENGINEERING OFFICE.

STANDARD DETAIL NO. L-03
REV:

NOTES:
1. CUT & REMOVE ALL TWINE & PLASTIC. SCARIFY SIDES OF PLANTING HOLE & ROOT BALL.

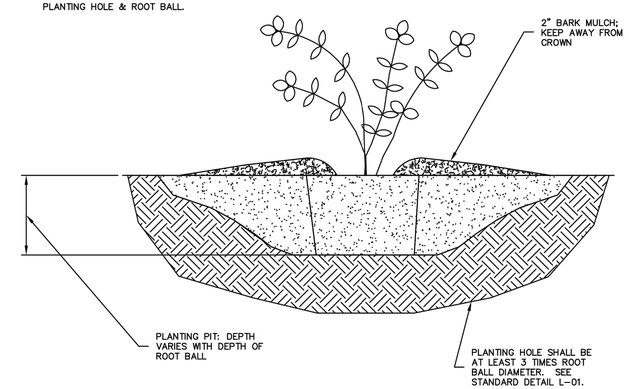

APPROVED	DEPT.	DATE

Back to Table of Contents

NO SCALE

CITY OF ISSAQUAH
PUBLIC WORKS DEPARTMENT
APRIL 2010

TYPICAL SHRUB GROUND COVER PLANTING

NOTE: THE ORIGINAL IS APPROVED FOR PUBLICATION BY PARKS DEPARTMENT AND FILED AT THE CITY OF ISSAQUAH PUBLIC WORKS ENGINEERING OFFICE.

STANDARD DETAIL NO. L-04
REV:

95% SUBMITTAL

DAVID EVANS AND ASSOCIATES INC.
415 - 118th Avenue SE
Bellevue Washington 98005-3518
Phone: 425.519.6500

NO.	DATE	DESCRIPTION	BY

DOGWOOD ST. BRIDGE REPLACEMENT

DRAWN OXA | DSGN. KXLA | CHKD. MLF

CITY OF ISSAQUAH

KAYLA MARIE PLEOTTE
STATE OF WASHINGTON
50489
REGISTERED PROFESSIONAL ENGINEER

STANDARD DETAILS

DATE: APRIL 2014 | JOB # BRM-1408(002) | SCALE: AS NOTED

oxa 04/21/14 5:55pm – \\bivfs1\project\\SSY00000002\040CAD\TT\SHEETS\TT5T005SS Y002.dwg

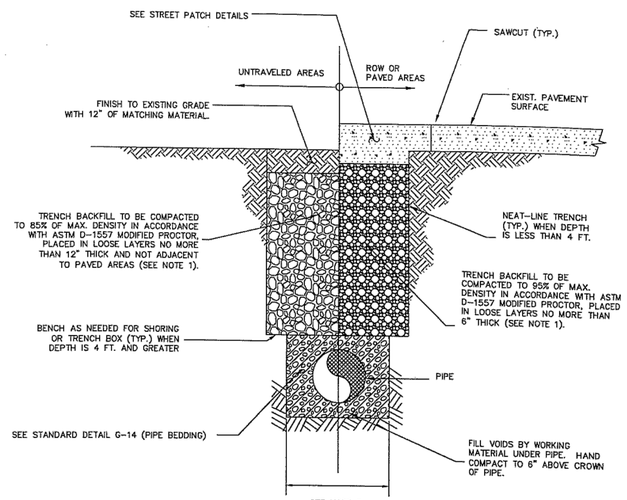

NOTES:

1. TRENCH BACKFILL MATERIAL TO BE WELL GRADED "COMMON BORROW" FREE OF CLODS OR ROCKS GREATER THAN 3" IN ANY DIMENSION WITH A MOISTURE CONTENT WITHIN 2% OF OPTIMUM – WSDOT STD SPEC 9-03.14 (3).
2. MAXIMUM WIDTH OF TRENCH AT TOP OF PIPE.
   * 30" FOR PIPE UP TO AND INCLUDING 12" NOMINAL DIAMETER.
   * O.D. PLUS 16" FOR PIPE LARGER THAN 12" NOMINAL DIAMETER.
3. CDF EQUAL TO CADMAN PROFLOW 5 HOUR 11021 REQUIRED WHEN CROSSING EXISTING STREETS.
4. COMPACTION TESTING AND PROCTOR REQUIRED. ONE TEST PER LIFT PER 100' OF TRENCH. MINIMUM 2 TESTS PER LIFT.
5. MAXIMUM TYPICAL TRENCH DEPTH IS 48". DEEPER TRENCHES MUST BE IDENTIFIED VIA SEPARATE UTILITY PROFILE DESIGN AND APPROVED BY THE CITY ENGINEER OR DESIGNEE.
6. COMPACTION TESTING AT DEPTHS GREATER THAN 4' IN TRENCHES MAY BE ACCOMPLISHED BY MAINTAINING A COMPACTION PATTERN PROVEN TO MEET COMPACTION REQUIREMENTS.
7. TRENCHES LESS THAN 2' WIDE REQUIRE CDF.

REVISION: OCT. 3, 2012 NO SCALE

CITY OF ISSAQUAH PUBLIC WORKS DEPARTMENT | EXPIRES | **TYPICAL PIPE TRENCH DETAIL** | **STANDARD DETAIL NO. G-01**

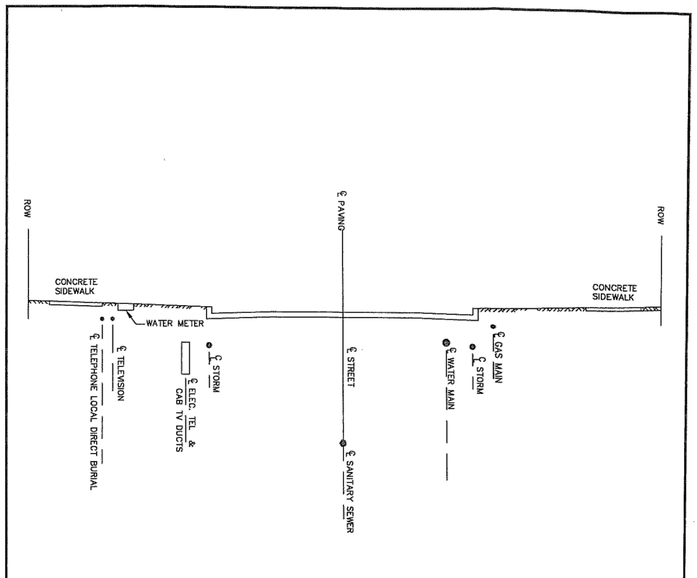

NOTES:

1. WATER AND STORM PIPES SHALL HAVE A MINIMUM HORIZONTAL SEPARATION OF 30" AND A MINIMUM VERTICAL SEPARATION OF 18".
2. SEWER AND WATER PIPE SHALL HAVE A MINIMUM SEPARATION AS DEFINED IN THE ECOLOGY "CRITERIA FOR SEWAGE WORKS DESIGN".

REVISION: OCT. 3, 2012 NO SCALE

CITY OF ISSAQUAH PUBLIC WORKS DEPARTMENT | EXPIRES | **STANDARD TYPICAL LOCATING FOR UNDERGROUND UTILITIES** | **STANDARD DETAIL NO. G-06**

95% SUBMITTAL

DAVID EVANS AND ASSOCIATES INC.
415 - 118th Avenue SE
Bellevue Washington 98005-3518
Phone: 425.519.6500

NO.	DATE	DESCRIPTION	BY

DOGWOOD ST. BRIDGE REPLACEMENT

DRAWN OXA | DSGN. KXLA | CHKD. MLF

CITY OF ISSAQUAH

KAYLA MARIE PIROTTE, STATE OF WASHINGTON, 50489, REGISTERED PROFESSIONAL ENGINEER

STANDARD DETAILS

DATE: APRIL 2014 | JOB # BRM-1408(002) | SCALE: AS NOTED

oxa 04/21/14 5:55pm – \\blvfs1\project\V\ISSY00000002\0400CAD\TT\SHEETS\TTST0068SSY002.dwg

DRAWN BY: LISA CYFORD

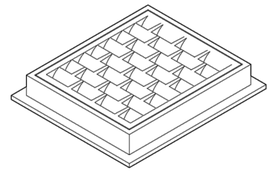

FRAME AND VANED GRATE

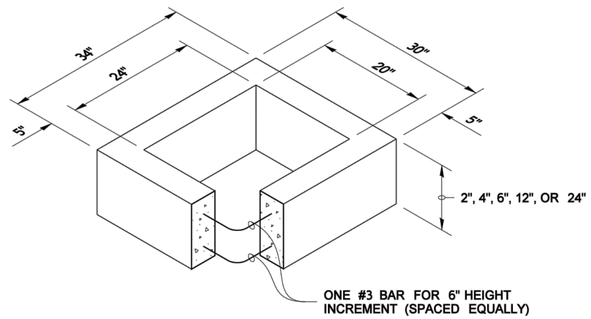

RECTANGULAR ADJUSTMENT SECTION

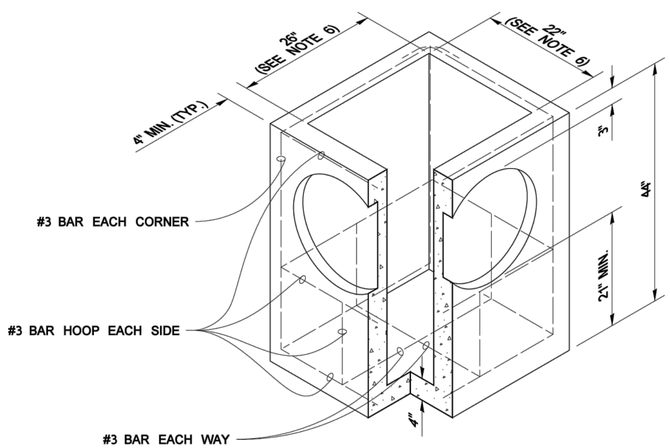

PRECAST BASE SECTION

PIPE ALLOWANCES	
PIPE MATERIAL	MAXIMUM INSIDE DIAMETER
REINFORCED OR PLAIN CONCRETE	12"
ALL METAL PIPE	15"
CPSSP * (STD. SPEC. 9-05.20)	12"
SOLID WALL PVC (STD. SPEC. 9-05.12(1))	15"
PROFILE WALL PVC (STD. SPEC. 9-05.12(2))	15"

* CORRUGATED POLYETHYLENE STORM SEWER PIPE

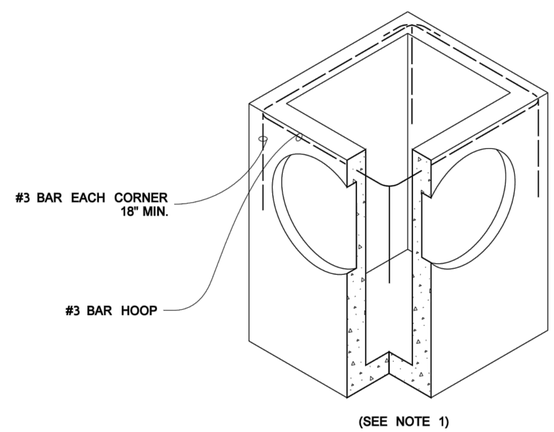

ALTERNATIVE PRECAST BASE SECTION

NOTES

1. As acceptable alternatives to the rebar shown in the PRECAST BASE SECTION, fibers (placed according to the Standard Specifications), or wire mesh having a minimum area of 0.12 square inches per foot shall be used with the minimum required rebar shown in the ALTERNATIVE PRECAST BASE SECTION. Wire mesh shall not be placed in the knockouts.
2. The knockout diameter shall not be greater than 20". Knockouts shall have a wall thickness of 2" minimum to 2.5" maximum. Provide a 1.5" minimum gap between the knockout wall and the outside of the pipe. After the pipe is installed, fill the gap with joint mortar in accordance with Standard Specification 9-04.3.
3. The maximum depth from the finished grade to the lowest pipe invert shall be 5'.
4. The frame and grate may be installed with the flange down, or integrally cast into the adjustment section with flange up.
5. The Precast Base Section may have a rounded floor, and the walls may be sloped at a rate of 1:24 or steeper.
6. The opening shall be measured at the top of the Precast Base Section.
7. All pickup holes shall be grouted full after the basin has been placed.

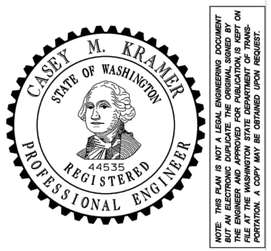

NOTE: THIS PLAN IS NOT A LEGAL ENGINEERING DOCUMENT BUT AN ELECTRONIC DUPLICATE. THE ORIGINAL SIGNED BY THE ENGINEER AND APPROVED FOR PUBLICATION IS KEPT ON FILE AT THE WASHINGTON STATE DEPARTMENT OF TRANSPORTATION. A COPY MAY BE OBTAINED UPON REQUEST.

CATCH BASIN TYPE 1

STANDARD PLAN B-5.20-01

SHEET 1 OF 1 SHEET

APPROVED FOR PUBLICATION

Pasco Bakotich III 06-16-11

STATE DESIGN ENGINEER DATE

Washington State Department of Transportation

95% SUBMITTAL

DAVID EVANS AND ASSOCIATES INC.
415 - 118th Avenue SE
Bellevue Washington 98005-3518
Phone: 425.519.6500

oxa 04/21/14 5:56pm – \\bivfs1\project\V\ISSY00000002\04000CAD\TT\SHEETS\TTST007ISSY002.dwg

NO.	DATE	DESCRIPTION	BY

DOGWOOD ST. BRIDGE REPLACEMENT

DRAWN OXA | DSGN. KXLA | CHKD. MLF

CITY OF ISSAQUAH

STANDARD DETAILS

DATE: APRIL 2014 | JOB # BRM-1408(002) | SCALE: AS NOTED

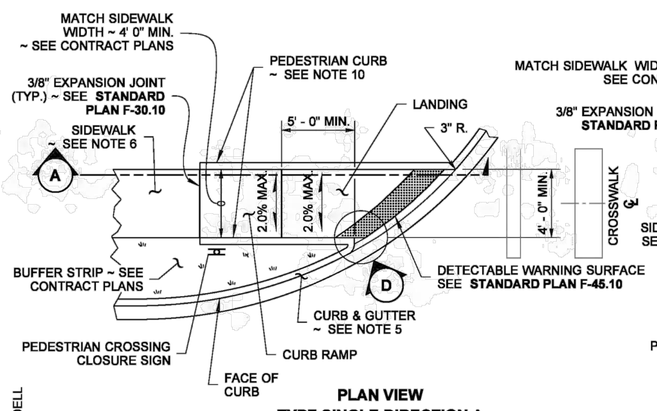

PLAN VIEW
TYPE SINGLE DIRECTION A

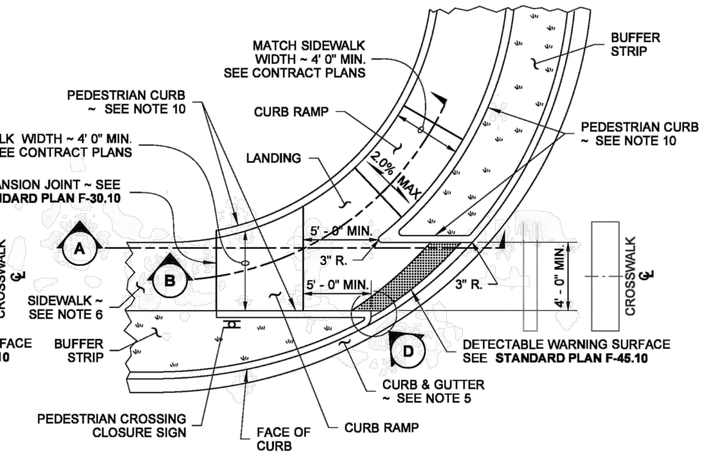

PLAN VIEW
TYPE SINGLE DIRECTION B

NOTES

1. This plan is to be used where pedestrian crossing in one direction is not permitted.
2. Curb ramp location shall be placed within the width of the associated crosswalk, or as shown in the Contract Plans.
3. Where "GRADE BREAK" is called out, the entire length of the grade break between the two adjacent surface planes shall be flush.
4. Do not place gratings, junction boxes, access covers or other appurtenances in front of the curb ramp or on any part of the curb ramp or landing.
5. See the Contract Documents for the curb design specified. See **Standard Plan F-10.12** for Curb, Curb and Gutter, Depressed Curb and Gutter and Pedestrian Curb details.
6. See **Standard Plan F-30.10** for Cement Concrete Sidewalk Details. See contract plans for width and placement of sidewalk.
7. The bid item "Cement Concrete Curb Ramp Type __" does not include the adjacent Curb or (Curb and Gutter), Depressed Curb and Gutter, Pedestrian Curb or Sidewalk, or the pedestrian crossing closure sign.
8. The curb ramp maximum running slope shall not require the ramp length to exceed 15 feet to avoid chasing the slope indefinitely when connecting to steep grades. When applying the 15 foot maximum length, the running slope of the curb ramp shall be as flat as feasible.
9. Curb ramps and landings shall receive broom finish. See **Standard Specifications 8-14.**
10. Pedestrian Curb may be omitted if the ground surface at the back of the Curb Ramp and/or landing will be at the same elevation as the Curb Ramp or Landing and there will be no material to retain.

DRAWN BY: FERN LIDDELL

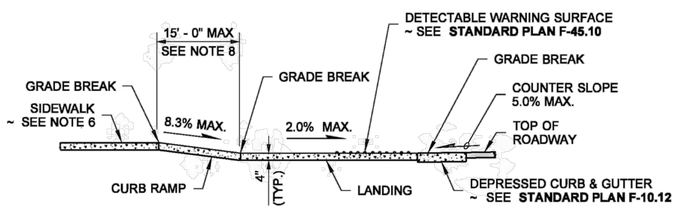

SECTION A

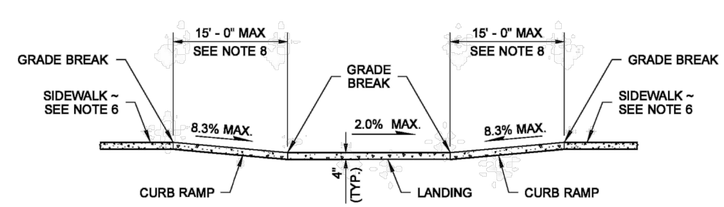

SECTION B

LEGEND

SLOPE IN EITHER DIRECTION

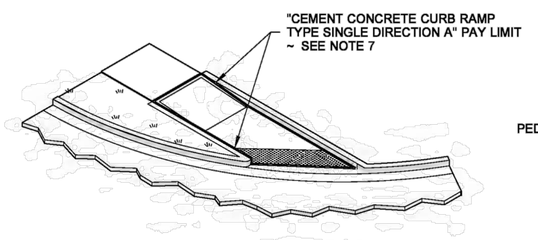

ISOMETRIC VIEW
TYPE SINGLE DIRECTION A
PAY LIMIT

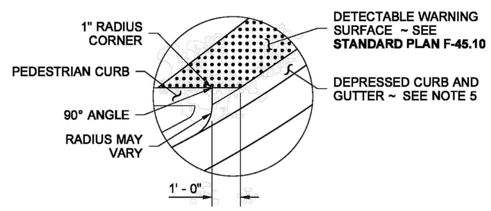

DETAIL D

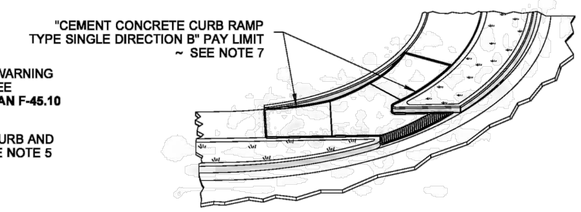

ISOMETRIC VIEW
TYPE SINGLE DIRECTION B
PAY LIMIT

EDWARD PATRICK BARRY
STATE OF WASHINGTON
34363
REGISTERED
PROFESSIONAL ENGINEER

NOTE: THIS PLAN IS NOT A LEGAL ENGINEERING DOCUMENT BUT AN ELECTRONIC DUPLICATE. THE ORIGINAL, SIGNED BY THE ENGINEER AND APPROVED FOR PUBLICATION, IS KEPT ON FILE AT THE WASHINGTON STATE DEPARTMENT OF TRANSPORTATION. A COPY MAY BE OBTAINED UPON REQUEST.

SINGLE DIRECTION CURB RAMP

STANDARD PLAN F-40.16-02

SHEET 1 OF 1 SHEET

APPROVED FOR PUBLICATION

Pasco Bakotich III — STATE DESIGN ENGINEER
6/20/13 — DATE

Washington State Department of Transportation

95% SUBMITTAL

DAVID EVANS AND ASSOCIATES INC.
415 - 118th Avenue SE
Bellevue Washington 98005-3518
Phone: 425.519.6500

NO.	DATE	DESCRIPTION	BY

DOGWOOD ST. BRIDGE REPLACEMENT

DRAWN OXA | DSGN. KXLA | CHKD. MLF

CITY OF ISSAQUAH

KAYLA MARIE PRUTTER
STATE OF WASHINGTON
50489
REGISTERED
PROFESSIONAL ENGINEER

STANDARD DETAILS

DATE: APRIL 2014 | JOB # BRM-1408(002) | SCALE: AS NOTED

oxa 04/21/14 5:56pm – \\blvfs1\project\y\ISSY00000002\0400CAD\TT\SHEETS\TTST008ISSY002.dwg

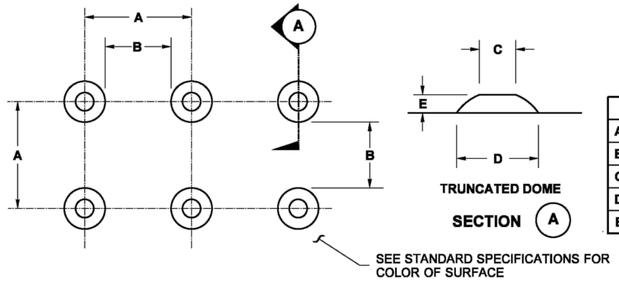

TRUNCATED DOME SPACING
SEE NOTE 3

	MIN.	MAX.
A	1.60"	2.40"
B	0.65"	—
C	0.45"	0.90"
D	0.9"	1.40"
E	0.2"	0.2"

TRUNCATED DOME DETAILS

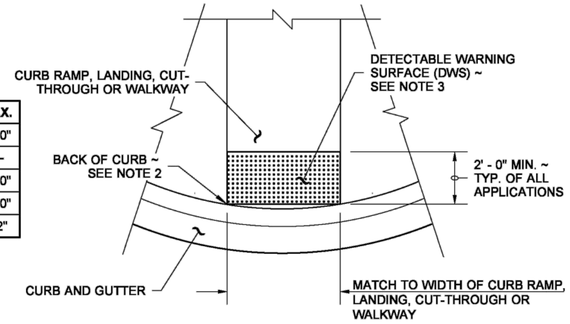

DETECTABLE WARNING SURFACE DETAIL

NOTES

1. The Detectable Warning Surface (DWS) shall extend the full width of the curb ramp (exclusive of flares) or the landing.
2. The Detectable Warning Surface shall be placed at the back of curb, and need not follow the radius.
3. The rows of truncated domes shall be aligned to be perpendicular to the grade break at the back of curb.
4. The rows of truncated domes shall be aligned to be parallel to the direction of travel.
5. If curb and gutter are not present, such as a shared-use path connection, the Detectable Warning Surface shall be placed at the pavement edge.
6. See **Standard Plans** for sidewalk and curb ramp details.
7. If a curb ramp is required, the location of the Detectable Warning Surface must be at the bottom of the ramp and within the required distance from the rail.
8. When the grade break between the curb ramp and the landing is less than or equal to 5 ft. from the back of curb at all points, place the Detectable Warning Surface on the bottom of the curb ramp.

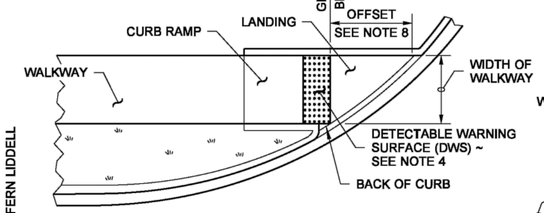

SINGLE DIRECTION CURB RAMP
(GRADE BREAK BETWEEN CURB AND LANDING ≤ 5 FT. FROM BACK OF CURB)
(SEE NOTE 6)

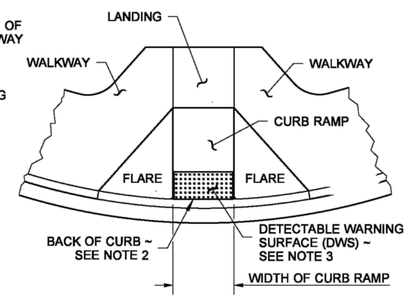

PERPENDICULAR CURB RAMP
(SEE NOTE 6)

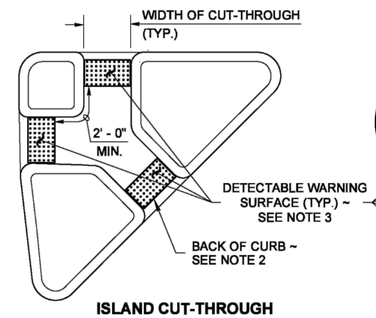

ISLAND CUT-THROUGH

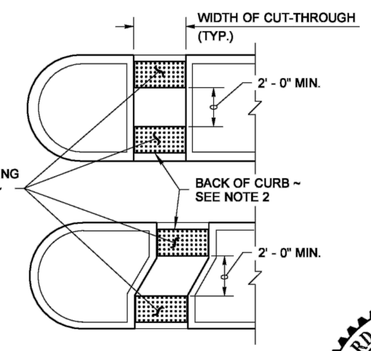

MEDIAN CUT-THROUGH

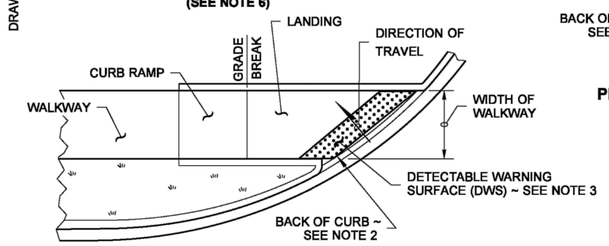

SINGLE DIRECTION CURB RAMP
(GRADE BREAK BETWEEN CURB AND LANDING > 5 FT. FROM BACK OF CURB)
(SEE NOTE 6)

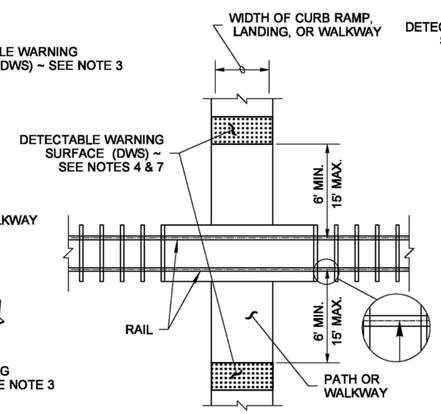

PEDESTRIAN RAILROAD CROSSING

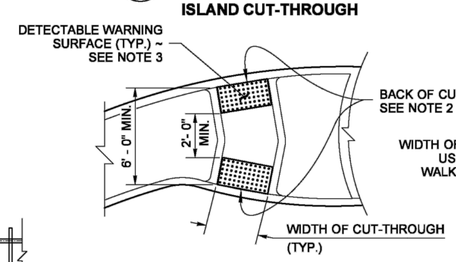

ROUNDABOUT SPLITTER ISLAND

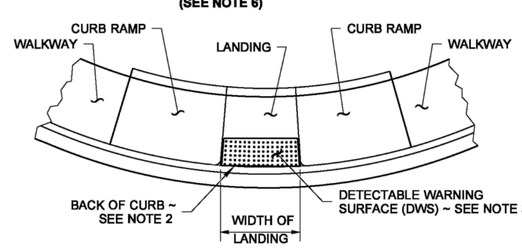

PARALLEL CURB RAMP
(SEE NOTE 6)

PLACEMENT GUIDELINES

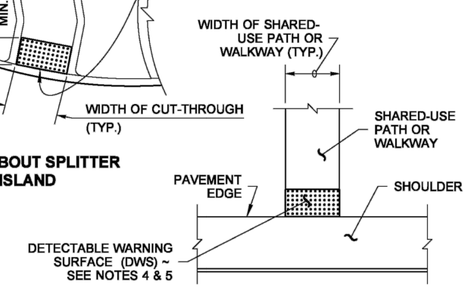

SHARED-USE PATH CONNECTION

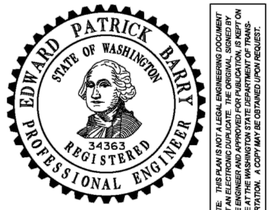

NOTE: THIS PLAN IS NOT A LEGAL ENGINEERING DOCUMENT BUT AN ELECTRONIC DUPLICATE. THE ORIGINAL, SIGNED BY THE ENGINEER AND APPROVED FOR PUBLICATION, IS KEPT ON FILE AT THE WASHINGTON STATE DEPARTMENT OF TRANSPORTATION. A COPY MAY BE OBTAINED UPON REQUEST.

DETECTABLE WARNING SURFACE

STANDARD PLAN F-45.10-01

SHEET 1 OF 1 SHEET

APPROVED FOR PUBLICATION

Pasco Bakotich III — STATE DESIGN ENGINEER
06/21/12 — DATE

Washington State Department of Transportation

DRAWN BY: FERN LIDDELL

95% SUBMITTAL

DAVID EVANS AND ASSOCIATES INC.
415 - 118th Avenue SE
Bellevue Washington 98005-3518
Phone: 425.519.6500

NO.	DATE	DESCRIPTION	BY

DOGWOOD ST. BRIDGE REPLACEMENT

DRAWN OXA | DSGN. KXLA | CHKD. MLF

CITY OF ISSAQUAH

KAYLA MARIE PAROTTE — STATE OF WASHINGTON — 50468 — REGISTERED PROFESSIONAL ENGINEER

STANDARD DETAILS

DATE: APRIL 2014 | JOB # BRM-1408(002) | SCALE: AS NOTED

oxa 04/21/14 5:56pm – \\blvfs1\project\V\VSSY00000002\0400CAD\TT\SHEETS\TTST0098SSY002.dwg

DRAWN BY: BILL BERENS

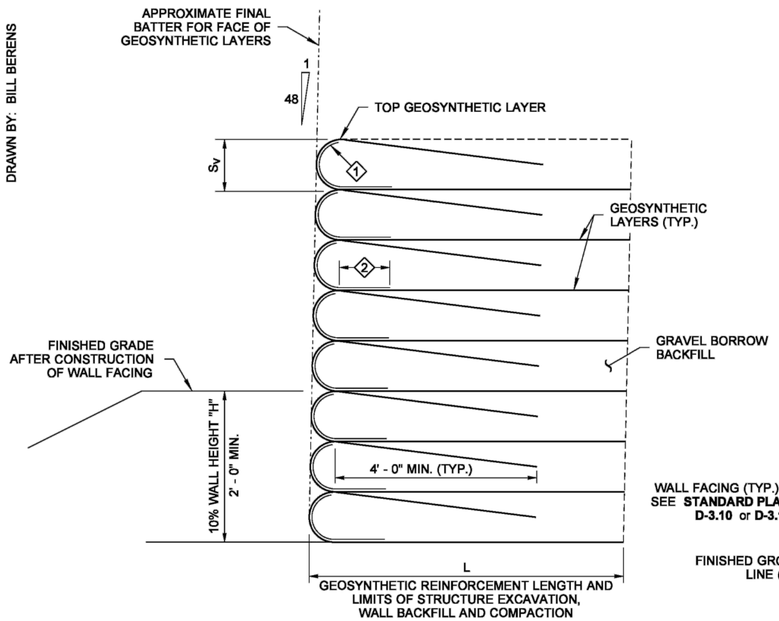

SECTION DETAIL

KEY NOTES

1. GEOTEXTILE FOR UNDERGROUND DRAINAGE CLASS A, MODERATE SURVIVABILITY (ONLY NEEDED IF A GEOGRID IS USED FOR GEOSYNTHETIC REINFORCEMENT)
2. 1' - 0" MIN. GEOTEXTILE OVERLAP, TOP & BOTTOM

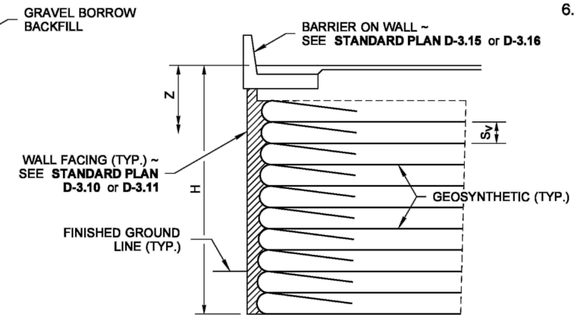

GEOSYNTHETIC WALL WITH 2 FT TRAFFIC SURCHARGE

TYPE 1, $A_S \leq 0.51g$

TYPE 5, $A_S \leq 0.20g$

NOTES

1. For the values of "L," see sheet 3, and for the values of "S_V" see sheet 2.
2. For Geosynthetic Wall Construction Sequence, see sheet 4.
3. "A_S" is the peak seismic ground acceleration as defined and applied in the AASHTO LRFD Bridge Design Specifications, Articles 3.10.4.1 and 11.6.5.
4. The long-term geosynthetic design strength "T_{al}" shall be determined in accordance with WSDOT Standard Practice T925. See Qualified Products List (QPL), Appendix "D," for products in which "T_{al}" has been determined. "H" and "Z" are graphically defined. "Z" is the distance from the top of the wall to a geosynthetic layer, and is used to determine "T_{al}" for that layer.
5. "L," the geosynthetic reinforcement length behind the wall face, is graphically defined. The maximum factored bearing stress acts in the vertical direction at the base of the wall. The load factors used are as specified in the AASHTO LRFD Bridge Design Specifications for each specified limit state.
6. Fascia or facing type shall be selected from **Standard Plans D-3.10** or **D-3.11** and called out in the Contract Plans. Region is to coordinate with the Geotechnical Services and Bridge & Structures offices.

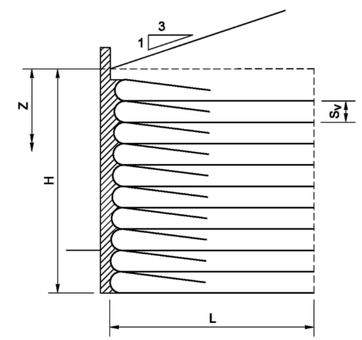

GEOSYNTHETIC WALL

TYPE 3, $A_S \leq 0.51g$

TYPE 7, $A_S \leq 0.20g$

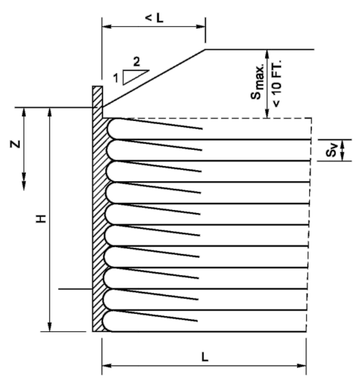

GEOSYNTHETIC WALL

TYPE 2, $A_S \leq 0.51g$

TYPE 6, $A_S \leq 0.20g$

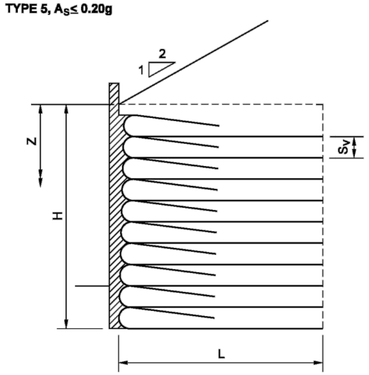

GEOSYNTHETIC WALL

TYPE 4, $A_S \leq 0.51g$

TYPE 8, $A_S \leq 0.20g$

TONY M. ALLEN
STATE OF WASHINGTON
25339
REGISTERED
PROFESSIONAL ENGINEER

NOTE: THIS PLAN IS NOT A LEGAL ENGINEERING DOCUMENT BUT AN ELECTRONIC DUPLICATE. THE ORIGINAL, SIGNED BY THE ENGINEER AND APPROVED FOR PUBLICATION, IS KEPT ON FILE AT THE WASHINGTON STATE DEPARTMENT OF TRANSPORTATION. A COPY MAY BE OBTAINED UPON REQUEST.

PERMANENT GEOSYNTHETIC WALL

STANDARD PLAN D-3.09-00

SHEET 1 OF 4 SHEETS

APPROVED FOR PUBLICATION

Pasco Bakotich III — STATE DESIGN ENGINEER

05/17/12 — DATE

Washington State Department of Transportation

95% SUBMITTAL

DAVID EVANS AND ASSOCIATES INC.
415 - 118th Avenue SE
Bellevue Washington 98005-3518
Phone: 425.519.6500

NO.	DATE	DESCRIPTION	BY

DOGWOOD ST. BRIDGE REPLACEMENT

DRAWN OXA | DSGN. KXLA | CHKD. MLF

CITY OF ISSAQUAH

KAYLA MARIE PIROTTE
STATE OF WASHINGTON
50469
REGISTERED
PROFESSIONAL ENGINEER

STANDARD DETAILS

DATE: APRIL 2014 | JOB # BRM-1408(002) | SCALE: AS NOTED

oxd 04/21/14 5:56pm - \\blvfs1\project\V\SSY00000002\0400CAD\TT\SHEETS\TTST010SSY002.dwg

DRAWN BY: BILL BERENS

PERMANENT GEOSYNTHETIC WALL - GEOSYNTHETIC REINFORCEMENT DESIGN

WALL GEOMETRY AND REINFORCEMENT LAYER LOCATION			LONG-TERM GEOSYNTHETIC REINFORCEMENT STRENGTH REQUIRED, T_{al} (lbs/ft)*					
TOTAL WALL HEIGHT, H (ft)	DEPTH BELOW WALL TOP AT FACE, z (ft)	GEOSYNTHETIC REINFORCEMENT VERTICAL SPACING, S_v (ft)	GEOSYNTHETIC WALL TYPE 1	GEOSYNTHETIC WALL TYPES 2 AND 4	GEOSYNTHETIC WALL TYPE 3	GEOSYNTHETIC WALL TYPE 5	GEOSYNTHETIC WALL TYPES 6 AND 8	GEOSYNTHETIC WALL TYPE 7
UP TO 5	5	1.0	505	240	220	505	240	220
	5	1.25	631	300	280	631	300	275
5 < H ≤ 10	0 to 10	1.0	530	500	470	528	487	460
	0 to 10	1.25	660	630	590	660	609	575
10 < H ≤ 15	0 to 10	1.0	580	620	570	584	586	545
	10.1 to 15	1.0	760	780	740	760	760	719
	0 to 10	1.25	730	770	710	730	732	681
	10.1 to 15	1.25	950	980	920	950	950	899
15 < H ≤ 20	0 to 10	1.0	584	672	616	584	626	572
	10.1 to 20	1.0	992	1072	1000	992	1032	976
	0 to 10	1.25	730	840	770	730	783	715
	10.1 to 20	1.25	1240	1340	1250	1240	1290	1220
20 < H ≤ 25	0 to 10	1.0	580	720	660	584	667	599
	10.1 to 20	1.0	1050	1180	1100	1048	1128	1064
	20.1 to 25	1.0	1220	1350	1270	1224	1304	1240
	0 to 10	1.25	730	900	820	730	834	749
	10.1 to 20	1.25	1310	1470	1380	1310	1410	1330
	20.1 to 25	1.25	1530	1690	1590	1530	1630	1550
25 < H ≤ 30	0 to 10	1.0	580	780	700	584	708	626
	10.1 to 20	1.0	1050	1240	1140	1048	1168	1088
	20.1 to 30	1.0	1460	1640	1540	1456	1576	1496
	0 to 10	1.25	730	980	870	730	885	782
	10.1 to 20	1.25	1310	1550	1430	1310	1460	1360
	20.1 to 30	1.25	1820	2050	1920	1820	1970	1870
30 < H ≤ 35	0 to 10	1.0	580	830	740	584	749	653
	10.1 to 20	1.0	1050	1290	1180	1048	1216	1120
	20.1 to 30	1.0	1510	1740	1630	1512	1680	1584
	30.1 to 35	1.0	1690	1920	1800	1688	1848	1752
	0 to 10	1.25	730	1040	925	730	936	816
	10.1 to 20	1.25	1310	1610	1480	1310	1520	1400
	20.1 to 30	1.25	1890	2180	2040	1890	2100	1980
	30.1 to 35	1.25	2110	2400	2250	2110	2310	2190

NOTE: See Note 4, sheet 1.

TONY M. ALLEN
STATE OF WASHINGTON
25339
REGISTERED
PROFESSIONAL ENGINEER

NOTE: THIS PLAN IS NOT A LEGAL ENGINEERING DOCUMENT BUT AN ELECTRONIC DUPLICATE. THE ORIGINAL, SIGNED BY THE ENGINEER AND APPROVED FOR PUBLICATION, IS KEPT ON FILE AT THE WASHINGTON STATE DEPARTMENT OF TRANSPORTATION. A COPY MAY BE OBTAINED UPON REQUEST.

PERMANENT GEOSYNTHETIC WALL

STANDARD PLAN D-3.09-00

SHEET 2 OF 4 SHEETS

APPROVED FOR PUBLICATION

Pasco Bakotich III — STATE DESIGN ENGINEER
05/17/12 — DATE

Washington State Department of Transportation

95% SUBMITTAL

DAVID EVANS AND ASSOCIATES INC.
415 - 118th Avenue SE
Bellevue Washington 98005-3518
Phone: 425.519.6500

NO.	DATE	DESCRIPTION	BY

DOGWOOD ST. BRIDGE REPLACEMENT

DRAWN OXA | DSGN. KXLA | CHKD. MLF

CITY OF ISSAQUAH

KAYLA MARIE PLAUTTE
STATE OF WASHINGTON
50489
REGISTERED
PROFESSIONAL ENGINEER

STANDARD DETAILS

DATE: APRIL 2014 | JOB # BRM-1408(002) | SCALE: AS NOTED

oxa 04/21/14 5:56pm – \\bivfs1\project\V\SSY00000002\0400CAD\TT\SHEETS\TTSTD11ISSY002.dwg

DRAWN BY: BILL BERENS

PERMANENT GEOSYNTHETIC WALL - EXTERNAL STABILITY DESIGN

(INCLUDES SEISMIC DESIGN FOR LARGE EARTHQUAKE: $A_S \leq$ 0.51g)

TOTAL WALL HEIGHT, H (ft)	GEOSYNTHETIC WALL TYPE 1					GEOSYNTHETIC WALL TYPE 2				GEOSYNTHETIC WALL TYPE 3				GEOSYNTHETIC WALL TYPE 4			
	L (FT)	MAX. FACTORED BEARING STRESS (psf)				L (FT)	MAX. FACTORED BEARING STRESS (psf)			L (FT)	MAX. FACTORED BEARING STRESS (psf)			L (FT)	MAX. FACTORED BEARING STRESS (psf)		
		SERVICE 1	STRENGTH 1	EXTREME EVENT I	EXTREME EVENT II		SERVICE 1	STRENGTH 1	EXTREME EVENT I		SERVICE 1	STRENGTH 1	EXTREME EVENT I		SERVICE 1	STRENGTH 1	EXTREME EVENT I
5	11	847	1220	1011	1192	7	1057	1535	1391	6	852	1168	1284	7	975	1343	1473
6	11	1081	1566	1388	1949	8	1295	1862	1671	7	1028	1415	1598	9	1171	1613	1756
7	11	1248	1800	1685	2165	9	1469	2099	1981	8	1203	1657	1890	10	1366	1882	2058
8	11	1415	2034	1982	2381	10	1643	2336	2291	8	1378	1899	2182	11	1561	2151	2360
9	11	1582	2268	2279	2597	11	1817	2573	2601	9	1553	2141	2474	12	1756	2420	2662
10	11	1768	2531	2609	3278	11	2069	2968	3006	10	1738	2394	2811	14	1951	2685	2947
11	11	1916	2736	2873	3029	12	2165	3047	3221	11	1903	2625	3058	15	2146	2958	3266
12	11	2083	2970	3170	3245	13	2339	3284	3531	12	2078	2867	3350	16	2341	3227	3568
13	11	2250	3204	3467	3461	14	2513	3521	3841	13	2253	3109	3642	18	2536	3496	3870
14	11	2417	3438	3764	3677	15	2687	3758	4151	14	2428	3351	3934	19	2731	3765	4172
15	11	2650	3783	4198	4176	16	2800	3872	4374	15	2607	3590	4216	20	2924	4029	4494
16	11	2751	3906	4358	4238	17	3035	4232	4771	16	2778	3835	4518	22	3121	4303	4776
17	12	2918	4140	4655	4325	18	3209	4469	5081	17	2953	4077	4810	23	3316	4572	5078
18	13	3085	4374	4952	4541	18	3383	4706	5391	18	3128	4319	5102	24	3511	4841	5380
19	14	3252	4608	5249	4757	19	3557	4943	5701	19	3303	4561	5394	25	3706	5110	5682
20	15	3412	4835	5424	4927	21	3811	5286	5975	20	3476	4787	5621	27	3899	5371	5965
21	15	3586	5076	5843	5189	21	3905	5417	6321	21	3653	5045	5978	28	4096	5648	6286
22	16	3753	5310	6140	5405	22	4079	5654	6631	22	3828	5287	6270	29	4291	5917	6588
23	16	3920	5544	6437	5621	23	4253	5891	6941	23	4003	5529	6562	31	4486	6186	6890
24	17	4087	5778	6734	5837	24	4427	6128	7251	23	4178	5771	6854	32	4681	6455	7192
25	18	4268	6038	7040	6027	25	4629	6404	7505	24	4375	6032	7230	33	4873	6716	7519
26	18	4421	6246	7328	6269	25	4775	6602	7871	25	4528	6255	7438	35	5071	6993	7796
27	19	4588	6480	7625	6485	26	4949	6839	8181	26	4703	6497	7730	36	5266	7262	8098
28	19	4755	6714	7922	6701	27	5123	7076	8491	27	4878	6739	8022	37	5461	7531	8400
29	20	4922	6948	8219	6917	28	5297	7313	8801	28	5053	6981	8314	38	5656	7800	8702
30	21	5123	7238	8698	7148	29	5446	7523	9093	29	5244	7228	8632	40	5848	8057	8988
31	22	5256	7416	8813	7349	30	5645	7787	9421	30	5403	7465	8898	41	6046	8338	9306
32	23	5423	7650	9110	7565	30	5819	8024	9731	31	5578	7707	9190	42	6241	8607	9608
33	24	5590	7884	9407	7781	31	5993	8261	10041	32	5753	7949	9482	44	6436	8876	9910
34	25	5757	8118	9704	7997	32	6167	8498	10351	33	5928	8191	9774	45	6631	9145	10212
35	25	5863	8251	9874	8080	32	6320	8737	10766	34	6112	8425	10035	46	6823	9403	10544

NOTE: See General Note 5, sheet 1.

PERMANENT GEOSYNTHETIC WALL - EXTERNAL STABILITY DESIGN

(INCLUDES SEISMIC DESIGN FOR LARGE EARTHQUAKE: $A_S \leq$ 0.20g)

TOTAL WALL HEIGHT, H (ft)	GEOSYNTHETIC WALL TYPE 5					GEOSYNTHETIC WALL TYPE 6				GEOSYNTHETIC WALL TYPE 7				GEOSYNTHETIC WALL TYPE 8			
	L (FT)	MAX. FACTORED BEARING STRESS (psf)				L (FT)	MAX. FACTORED BEARING STRESS (psf)			L (FT)	MAX. FACTORED BEARING STRESS (psf)			L (FT)	MAX. FACTORED BEARING STRESS (psf)		
		SERVICE 1	STRENGTH 1	EXTEME EVENT I	EXTEME EVENT II		SERVICE 1	STRENGTH 1	EXTREME EVENT I		SERVICE 1	STRENGTH 1	EXTREME EVENT I		SERVICE 1	STRENGTH 1	EXTREME EVENT I
5	11	847	1220	992	1192	6	1057	1535	1294	6	852	1168	1155	6	977	1349	1326
6	11	1105	1607	1320	1688	6	1358	1928	1574	6	1107	1536	1560	6	1278	1786	1868
7	11	1273	1843	1553	2090	6	1569	2226	1889	6	1302	1809	1842	6	1504	2105	2214
8	10	1441	2079	1786	2463	7	1780	2527	2211	7	1497	2082	2124	7	1730	2424	2560
9	10	1609	2315	2019	2808	7	1991	2831	2540	7	1692	2355	2406	7	1956	2743	2906
10	10	1768	2531	2229	3278	7	2266	3372	2776	7	1924	2692	2773	7	2228	3145	3381
11	10	1945	2787	2485	3424	8	2413	3445	3213	8	2082	2901	2970	8	2408	3381	3598
12	10	2113	3023	2718	3699	9	2624	3755	3555	9	2277	3174	3252	9	2634	3700	3944
13	11	2281	3259	2951	3954	10	2835	4066	3901	10	2472	3447	3534	10	2860	4019	4290
14	11	2449	3495	3184	4190	11	3046	4378	4249	11	2667	3720	3816	11	3086	4338	4636
15	11	2711	3884	3516	4396	11	3245	4598	4737	11	2886	4037	4159	11	3342	4718	5072
16	12	2785	3967	3650	4616	12	3468	5004	4948	12	3057	4266	4380	12	3538	4976	5328
17	12	2953	4203	3883	4809	12	3679	5316	5297	12	3252	4539	4662	12	3764	5295	5674
18	13	3121	4439	4116	4990	13	3890	5628	5644	13	3447	4812	4944	13	3990	5614	6020
19	14	3289	4675	4349	5163	14	4101	5939	5990	14	3642	5085	5226	14	4216	5933	6366
20	14	3522	5015	4642	5201	14	4326	6125	6321	14	3848	5383	5546	14	4456	6291	6762
21	15	3625	5147	4815	5489	15	4523	6557	6672	15	4032	5631	5790	15	4668	6571	7058
22	16	3793	5383	5048	5646	16	4734	6863	7006	16	4227	5904	6072	16	4894	6890	7404
23	17	3961	5619	5281	5801	17	4945	7166	7335	17	4422	6177	6354	17	5120	7209	7750
24	18	4129	5855	5514	5955	18	5156	7466	7657	18	4617	6450	6636	18	5346	7528	8096
25	18	4325	6131	5763	6146	18	5417	7683	7891	18	4810	6729	6932	18	5570	7863	8453
26	19	4465	6327	5980	6272	19	5578	8057	8280	19	5007	6996	7200	19	5798	8166	8788
27	19	4633	6563	6213	6438	19	5789	8346	8578	19	5202	7269	7482	19	6024	8485	9134
28	20	4801	6799	6446	6611	20	6000	8631	8866	20	5397	7542	7764	20	6250	8804	9480
29	21	4969	7035	6679	6793	21	6211	8912	9144	21	5592	7815	8046	21	6476	9123	9826
30	21	5123	7238	6881	7148	21	6577	9408	9515	21	5773	8075	8319	21	6684	9436	10143
31	22	5305	7507	7145	7192	22	6633	9457	9664	22	5982	8361	8610	22	6928	9761	10518
32	23	5473	7743	7378	7412	23	6844	9720	9905	23	6177	8634	8892	23	7154	10080	10864
33	24	5641	7979	7611	7649	24	7055	9978	10131	24	6372	8907	9174	24	7380	10399	11210
34	25	5809	8215	7844	7904	25	7266	10229	10343	25	6567	9180	9456	25	7606	10718	11556
35	25	5918	8341	7998	8177	25	7311	10373	10550	25	6735	9421	9705	25	7798	11009	11834

NOTE: See Note 5, sheet 1.

TONY M. ALLEN STATE OF WASHINGTON 25339 REGISTERED PROFESSIONAL ENGINEER

NOTE: THIS PLAN IS NOT A LEGAL ENGINEERING DOCUMENT BUT AN ELECTRONIC DUPLICATE. THE ORIGINAL, SIGNED BY THE ENGINEER AND APPROVED FOR PUBLICATION, IS KEPT ON FILE AT THE WASHINGTON STATE DEPARTMENT OF TRANSPORTATION. A COPY MAY BE OBTAINED UPON REQUEST.

PERMANENT GEOSYNTHETIC WALL

STANDARD PLAN D-3.09-00

SHEET 3 OF 4 SHEETS

APPROVED FOR PUBLICATION

Pasco Bakotich III — STATE DESIGN ENGINEER — *05/17/12* DATE

Washington State Department of Transportation

95% SUBMITTAL

DAVID EVANS AND ASSOCIATES INC.
415 - 118th Avenue SE
Bellevue Washington 98005-3518
Phone: 425.519.6500

NO.	DATE	DESCRIPTION	BY

DRAWN OXA | DSGN. KXLA | CHKD. MLF

DOGWOOD ST. BRIDGE REPLACEMENT

CITY OF ISSAQUAH

KAYLA MARIE PIROTTE STATE OF WASHINGTON 50489 REGISTERED PROFESSIONAL ENGINEER

STANDARD DETAILS

DATE: APRIL 2014 | JOB # BRM-1408(002) | SCALE: AS NOTED

oxa 04/21/14 5:56pm - \\blvfs1\project\i\ISSY00000002\0400CAD\TT\SHEETS\TTST012ISSY002.dwg

DRAWN BY: BILL BERENS

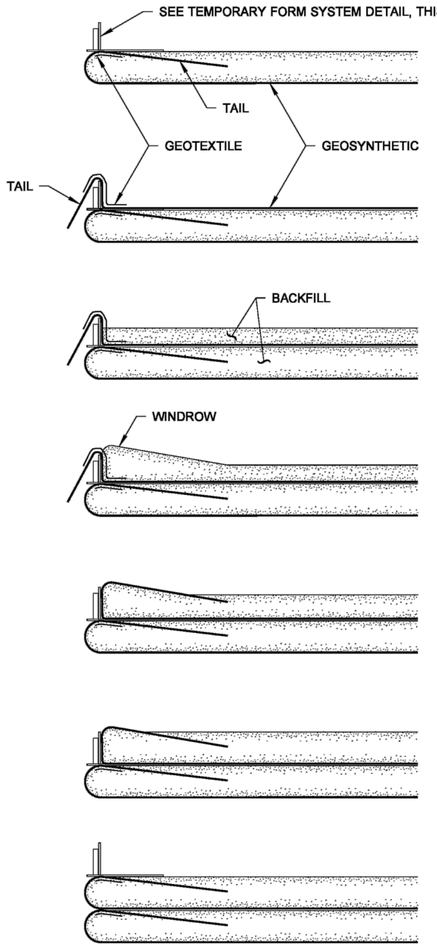

1. SET FORM ON COMPLETED LIFT.
2. UNROLL GEOSYNTHETIC AND POSITION IT SO THAT A 4' - 0" WIDE "TAIL" DRAPES OVER THE FORM. IF A GEOGRID IS USED FOR THE GEOSYNTHETIC REINFORCEMENT, POSITION GEOTEXTILE TO PREVENT BACKFILL FROM SPILLING THROUGH GEOGRID OPENINGS.
3. PLACE THE BACKFILL UNTIL THE BACKFILL IS UP TO HALF OF THE REQUIRED VERTICAL GEOSYNTHETIC LAYER SPACING.
4. PLACE A WINDROW TO SLIGHTLY GREATER THAN FULL LIFT HEIGHT AGAINST THE FORM.
5. PLACE THE GEOSYNTHETIC "TAIL" OVER THE WINDROW AND LOCK INTO PLACE WITH BACKFILL.
6. COMPLETE BACKFILLING UNTIL THE COMPACTED BACKFILL LAYER THICKNESS IS EQUAL TO THE REQUIRED VERTICAL GEOSYNTHETIC LAYER SPACING.
7. THE FORM MAY BE LEFT IN PLACE WHILE CONSTRUCTING THE NEXT LAYER (SEE NOTE 2) OTHERWISE, RESET THE FORM AND REPEAT THE SEQUENCE.

GEOSYNTHETIC WALL CONSTRUCTION SEQUENCE

(SECTION VIEW)

NOTES(SHEET)

1. Use of the Temporary Form System, as detailed in this plan, is optional.
2. To help maintain the wall face batter, leave the form system for the preceding layer in place while constructing the next layer. When the upper layer is complete, remove the form system from the lower layer and reset it for the next layer. See below.

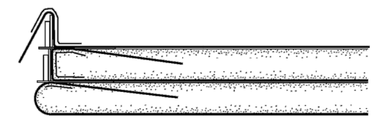

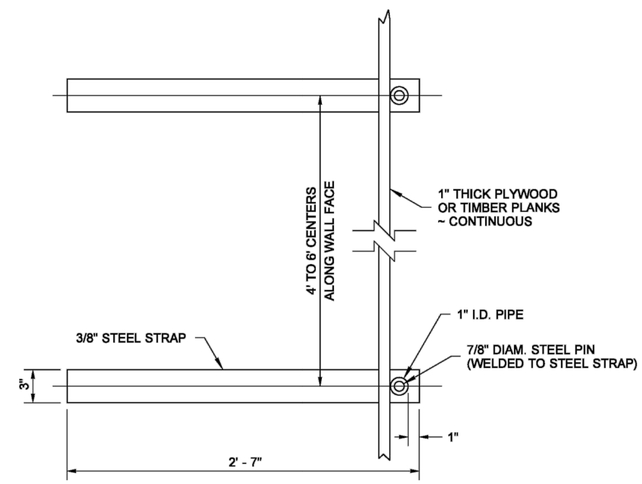

PLAN

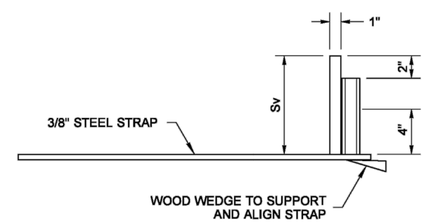

ELEVATION

TEMPORARY FORM SYSTEM DETAIL

TONY M. ALLEN
STATE OF WASHINGTON
25339
REGISTERED
PROFESSIONAL ENGINEER

NOTE: THIS PLAN IS NOT A LEGAL ENGINEERING DOCUMENT BUT AN ELECTRONIC DUPLICATE. THE ORIGINAL, SIGNED BY THE ENGINEER AND APPROVED FOR PUBLICATION, IS KEPT ON FILE AT THE WASHINGTON STATE DEPARTMENT OF TRANSPORTATION. A COPY MAY BE OBTAINED UPON REQUEST.

PERMANENT GEOSYNTHETIC WALL

STANDARD PLAN D-3.09-00

SHEET 4 OF 4 SHEETS

APPROVED FOR PUBLICATION

Pasco Bakotich III *05/17/12*

STATE DESIGN ENGINEER DATE

Washington State Department of Transportation

95% SUBMITTAL

DAVID EVANS AND ASSOCIATES INC.
415 - 118th Avenue SE
Bellevue Washington 98005-3518
Phone: 425.519.6500

NO.	DATE	DESCRIPTION	BY

DOGWOOD ST. BRIDGE REPLACEMENT

DRAWN OXA | DSGN. KXLA | CHKD. MLF

CITY OF ISSAQUAH

KAYLA MARIE PROUTY
STATE OF WASHINGTON
50489
REGISTERED
PROFESSIONAL ENGINEER

STANDARD DETAILS

DATE: APRIL 2014 | JOB # BRM-1408(002) | SCALE: AS NOTED

SHEET 61 OF 68

oxd 04/21/14 5:56pm – \\bivis1\project\\ISSY00000002\0400CAD\TT\SHEETS\TTST013SSY002.dwg

DRAWN BY: BILL BERENS

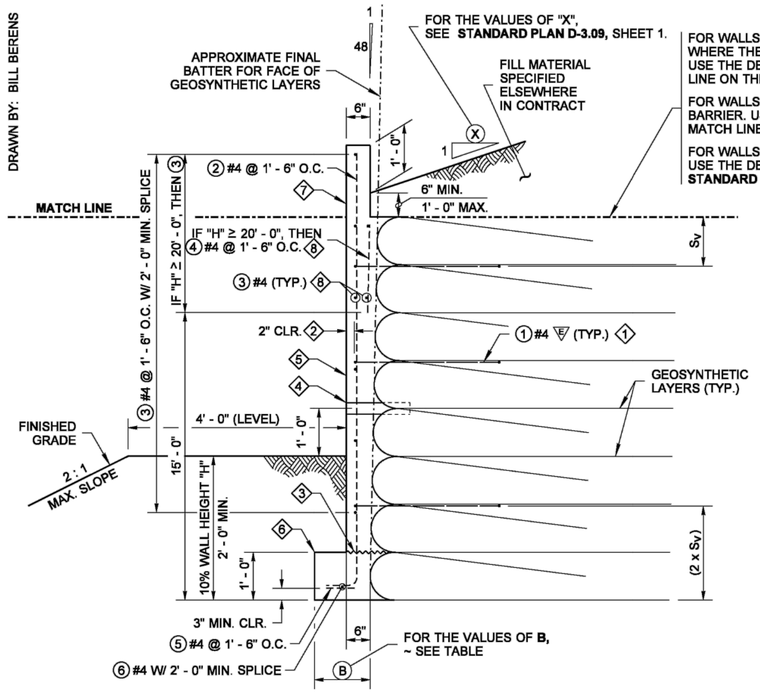

TYPICAL SECTION

PERMANENT GEOSYNTHETIC RETAINING WALL WITH CAST-IN-PLACE CONCRETE FASCIA

KEY NOTES

1. "N" ROWS OF ① #4 ▽ DOWEL REINFORCEMENT PLACE BETWEEN GEOSYNTHETIC LAYERS AT 5' - 0" O.C. HORIZONTAL SPACING, SEE TABLE. VERTICAL SPACING BETWEEN ROWS TO BE EQUAL, AS MULTIPLES OF "S_V" ALLOW. ROWS MAY BE STAGGERED. SEE **STD. PLAN D-3.09** FOR "S_V".
2. INCREASE THE COVER AS REQUIRED TO ACCOMMODATE ARCHITECTURAL FEATURES AND FINISH.
3. CONSTRUCTION JOINT WITH ROUGHENED SURFACE.
4. 3" I.D. PVC PIPE FOR WEEP HOLE IN WALL FACING ~ PLACE BETWEEN GEOSYNTHETIC LAYERS APPROX. 9" DEEP AT 12' - 0" HORIZONTAL SPACING. LENGTH TO EXTEND TO OUTER SURFACE OF SPECIFIED WALL. WEEP HOLES SHALL BE KEPT CLEAR OF CONCRETE. SEE **STANDARD PLAN D-3.09,** FOR DETAILS NOT SHOWN.
5. VERTICAL CONSTRUCTION JOINTS IN FASCIA @ 24' - 0" O.C. WITH 1/2 " PREMOLDED JOINT FILLER (SEE **STANDARD PLAN D-10.45**, "SPLIT ELEVATION").
6. VERTICAL CONSTRUCTION JOINTS IN FOOTING @ 120' O.C. MAX. (SEE **STANDARD PLAN D-10.45,** "ELEVATION"). IF THE FOOTING IS STEPPED, PROVIDE 2' - 0" NON-CONTACT LAP SPLICES FOR THE ⑥ #4 BARS AT EACH STEP.
7. COORDINATE WALL FINISH AND CONFIGURATION WITH STATE BRIDGE AND STRUCTURES ARCHITECT PER WSDOT DESIGN MANUAL 730.04(5).
8. THE ④ BARS AND INTERIOR ③ BARS SHALL BE USED ONLY IF THE FACE IS VERTICAL.

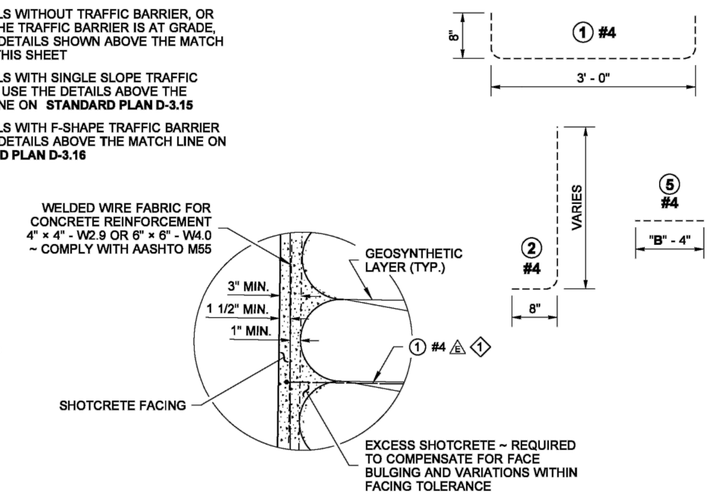

SHOTCRETE DETAIL

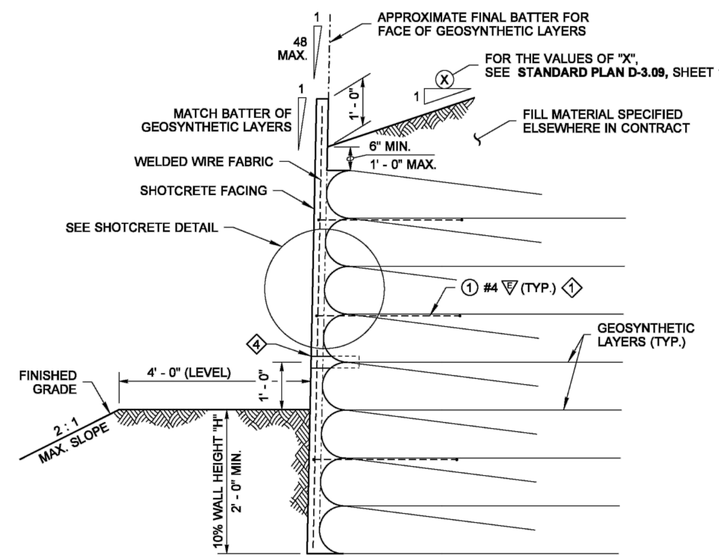

TYPICAL SECTION

PERMANENT GEOSYNTHETIC RETAINING WALL WITH SHOTCRETE FACING

NOTES

1. All bars shown on this plan shall be ASTM A706 unless otherwise specified in the Contract.
2. Safety cable or fence required when "H" ≥ 10' - 0".
3. All cast-in-place concrete shall be class 4000.

▽ = EPOXY COATED

DESIGN HEIGHT "H" (ft.)	ROWS OF #4 ▽ DOWEL BARS REQUIRED N (no.)	FASCIA FOOTING WIDTH B (ft. - in.)
UP TO 5	2	1' - 0"
6	3	1' - 0"
7	3	1' - 0"
8	3	1' - 0"
9	3	1' - 0"
10	4	1' - 0"
11	4	1' - 0 1/2"
12	4	1' - 0 1/2"
13	4	1' - 1"
14	4	1' - 1"
15	6	1' - 2"
16	6	1' - 2"
17	8	1' - 2 1/2"
18	8	1' - 2 1/2"
19	8	1' - 3"
20	10	1' - 3"
21	10	1' - 3 1/2"
22	10	1' - 3 1/2"
23	10	1' - 4"
24	10	1' - 4"
25	10	1' - 5"
26	10	1' - 5"
27	10	1' - 5 1/2"
28	10	1' - 5 1/2"
29	10	1' - 6"
30	10	1' - 6"
31	10	1' - 6 1/2"
32	10	1' - 6 1/2"
33	10	1' - 7"
34	10	1' - 7"
35	10	1' - 8"

BIJAN KHALEGHI — STATE OF WASHINGTON — 27695 — STRUCTURAL ENGINEER — PROFESSIONAL ENGINEER

NOTE: THIS PLAN IS NOT A LEGAL ENGINEERING DOCUMENT BUT AN ELECTRONIC DUPLICATE. THE ORIGINAL, SIGNED BY THE ENGINEER, IS ON FILE AT THE WASHINGTON STATE DEPARTMENT OF TRANSPORTATION. A COPY MAY BE OBTAINED UPON REQUEST.

CAST-IN-PLACE PERMANENT GEOSYNTHETIC WALL FASCIA AND FACING STANDARD PLAN D-3.10-01

SHEET 1 OF 1 SHEET

APPROVED FOR PUBLICATION

Pasco Bakotich III — STATE DESIGN ENGINEER — *5/29/13* DATE

Washington State Department of Transportation

95% SUBMITTAL

DAVID EVANS AND ASSOCIATES INC.
415 - 118th Avenue SE
Bellevue Washington 98005-3518
Phone: 425.519.6500

NO.	DATE	DESCRIPTION	BY

DOGWOOD ST. BRIDGE REPLACEMENT

DRAWN OXA | DSGN. KXLA | CHKD. MLF

CITY OF ISSAQUAH

KAYLA MARIE PIROTTE — STATE OF WASHINGTON — 50489 — REGISTERED PROFESSIONAL ENGINEER

STANDARD DETAILS

DATE: APRIL 2014 | JOB # BRM-1408(002) | SCALE: AS NOTED

oxa 04/21/14 5:56pm – \\blvfs1\project\\ISSY00000002\Q400CAD\TTI_SHEETS\TTST014ISSY002.dwg

DRAWN BY: MARK SUJKA

WOOD POST FASTENERS			
SIZE / TYPE	QUANTITY	WASHERS	LOCKNUTS
3/8" DIAM. × 4 3/4" BOLT	2	4	2
3/8" DIAM. × 3/4" BOLT	4	8	4
3/16" DIAM. × 1" SCREW	4	8	4

STEEL POST FASTENERS			
SIZE / TYPE	QUANTITY	WASHERS	LOCKNUTS
3/8" DIAM. × 2 3/4" BOLT	2	4	2
3/8" DIAM. × 3/4" BOLT	4	8	4
3/16" DIAM. × 1" SCREW	4	8	4
1 7/8" M-CLAMP	2	4	4

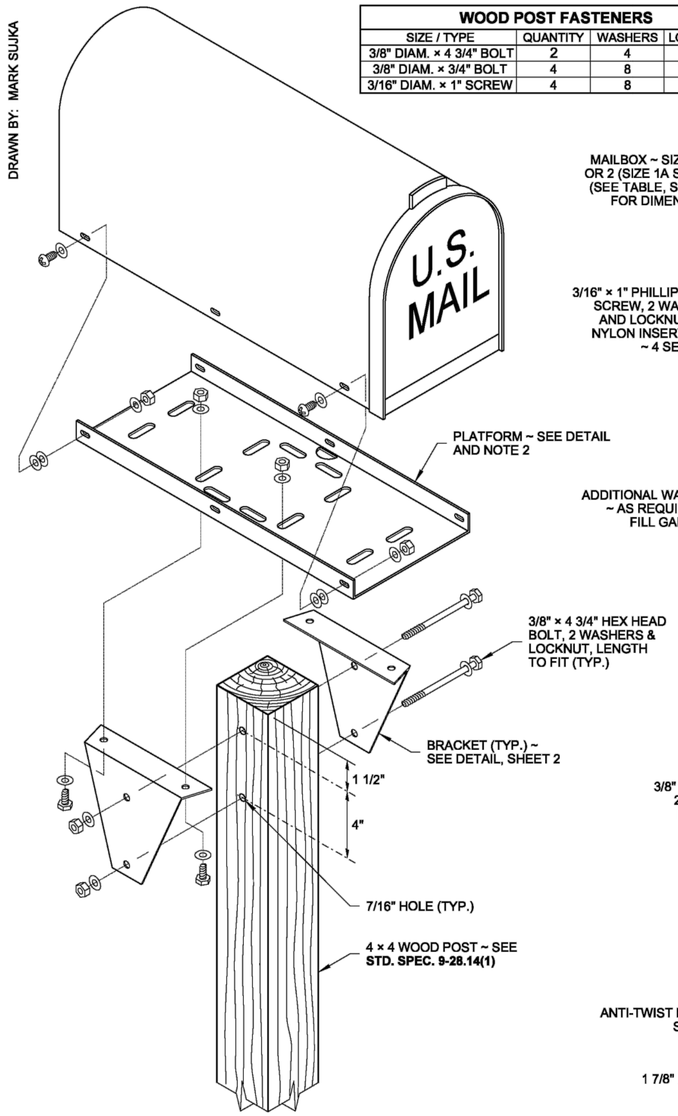

WOOD POST ASSEMBLY DETAIL

SEE **STEEL POST ASSEMBLY DETAIL** FOR SPECIFICATIONS NOT SHOWN

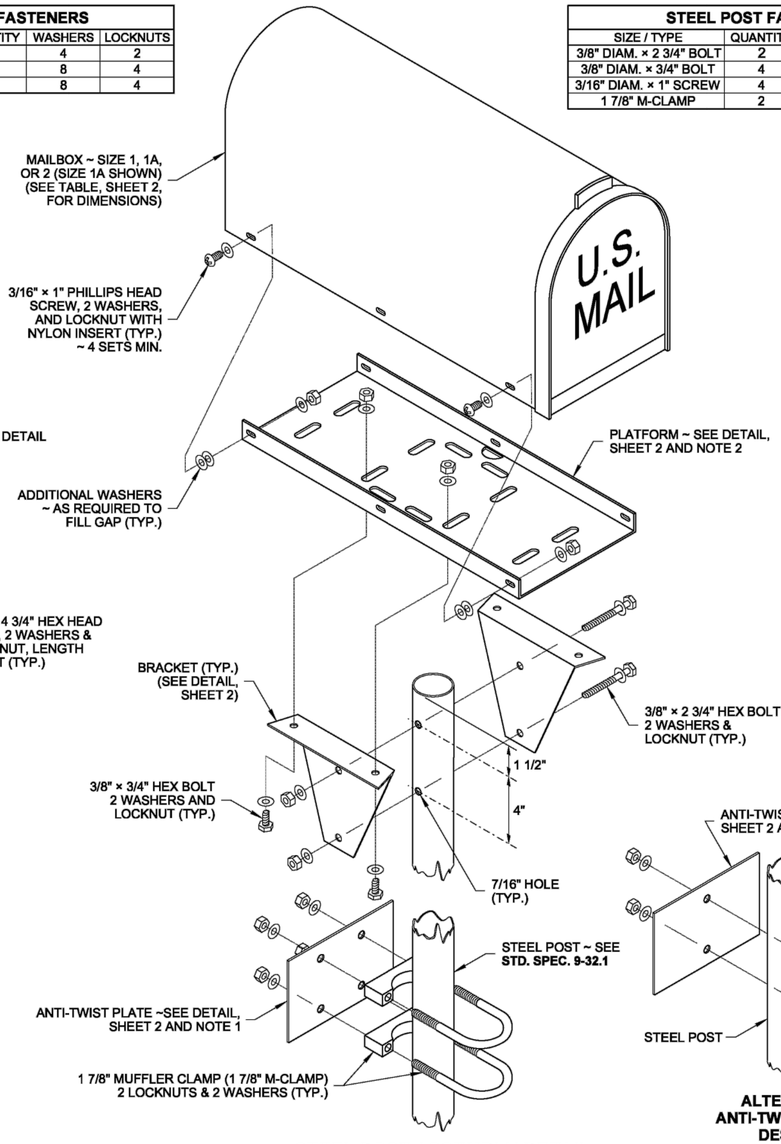

STEEL POST ASSEMBLY DETAIL

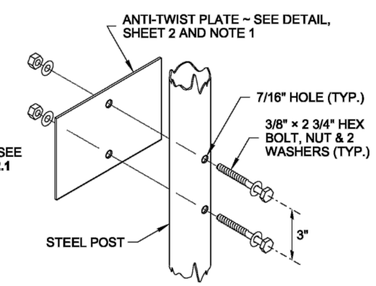

ALTERNATE ANTI-TWIST PLATE DESIGN

NOTES

1. A socket and wedge anchoring system that meets the NCHRP 350 crash test criteria may be substituted in lieu of the anti-twist plate designs shown. Anti-twist plates are not required for wood post installations.
2. The platform design shown on this plan features slots that accommodate several types of mailbox supports; only those slots necessary for assembling the type being installed are required. An adjustable platform may be used in lieu of this design, but it must fit the bracket design shown on this plan. Brackets are required for all single-post installations. Field drilling may be necessary.
3. Center the mailbox on the platform to ensure space for the mailbox door to open and to allow space for installing the fasteners (see ALIGNMENT DETAIL, Sheet 2). Spacing of mailbox mounting holes varies among manufacturers. Attachment of the mailbox to the platform may require drilling additional holes through the mailbox to fit the platform.
4. Attach a newspaper box to a steel post with two 1 7/8" Muffler Clamps spaced 4" apart. Field drill 7/16" holes in the newspaper box to fit. Use 2 1/2" × 1/4" lag bolts to attach newspaper boxes to wood posts. Newspaper boxes must not extend beyond the front of the mailbox when the mailbox door is closed.
5. A Type 2 Support **(Standard Plan H-70.20)** is required when 2 or more mailboxes are to be installed on one support.

BAKOTICH, PASCO III
STATE OF WASHINGTON
24557
REGISTERED
PROFESSIONAL ENGINEER

NOTE: THIS PLAN IS NOT A LEGAL ENGINEERING DOCUMENT BUT AN ELECTRONIC DUPLICATE. THE ORIGINAL, SIGNED BY THE ENGINEER, AND ENGINEER'S SEAL, IS ON FILE AT THE WASHINGTON STATE DEPARTMENT OF TRANSPORTATION. A COPY MAY BE OBTAINED UPON REQUEST.

MAILBOX SUPPORT TYPE 1

STANDARD PLAN H-70.10-01

SHEET 1 OF 2 SHEETS

APPROVED FOR PUBLICATION

Pasco Bakotich III — STATE DESIGN ENGINEER — *02-07-12* — DATE

Washington State Department of Transportation

95% SUBMITTAL

DAVID EVANS AND ASSOCIATES INC.
415 - 118th Avenue SE
Bellevue Washington 98005-3518
Phone: 425.519.6500

oxa 04/21/14 5:56pm – \\bvfs1\project\V\VSSY00000002\04000AD\TT\SHEETS\TTST01SISSY002.dwg

NO.	DATE	DESCRIPTION	BY

DOGWOOD ST. BRIDGE REPLACEMENT

DRAWN OXA | DSGN. KXLA | CHKD. MLF

CITY OF ISSAQUAH

KAYLA MARIE LABOTTE
STATE OF WASHINGTON
50489
REGISTERED
PROFESSIONAL ENGINEER

STANDARD DETAILS

DATE: APRIL 2014 | JOB # BRM-1408(002) | SCALE: AS NOTED

DRAWN BY: MARK SUJKA

MAILBOX & PLATFORM DIMENSIONS						
SIZE	MAILBOX DIMENSIONS			PLATFORM DIMENSIONS		
	L	W	H	L	W	H
1	19"	6 1/2"	8 1/2"	17"	6"	1"
1A	21"	8"	10 1/2"	19"	7 1/2"	1"
2	24"	11 1/2"	13 1/2"	21"	11"	1"

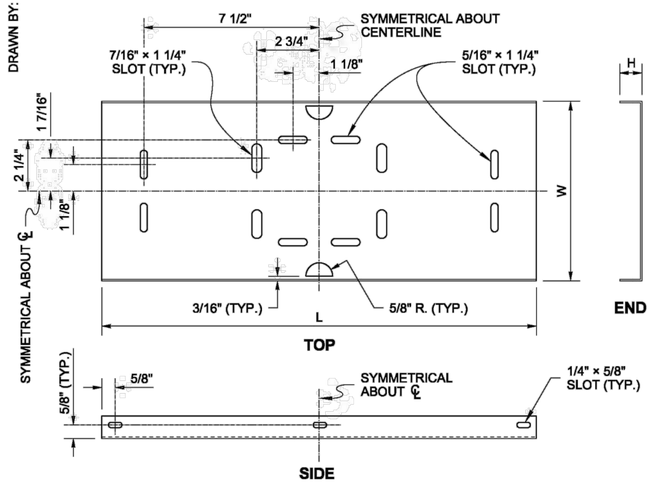

PLATFORM DETAIL

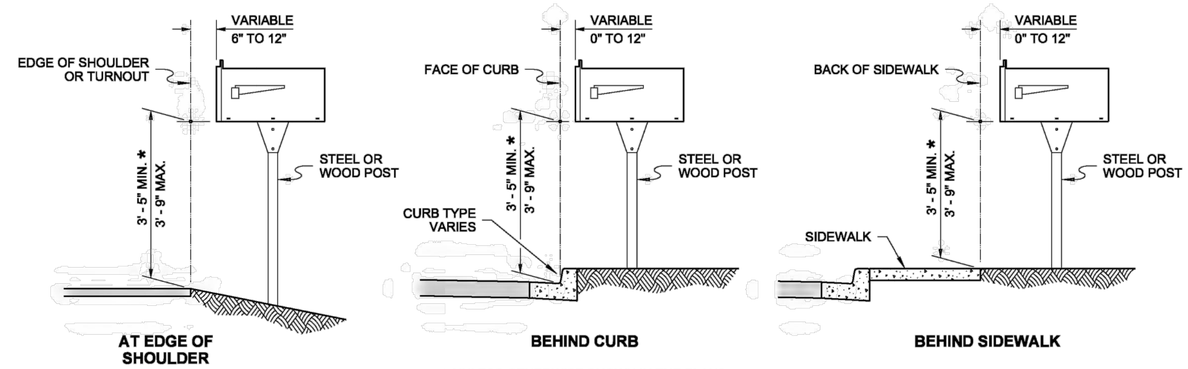

* UNLESS OTHERWISE SHOWN IN THE PLANS

MAILBOX PLACEMENT SECTIONS

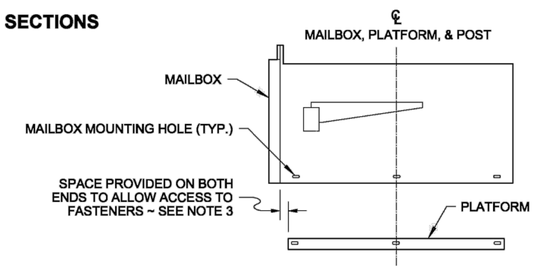

ALIGNMENT DETAIL

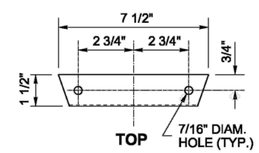

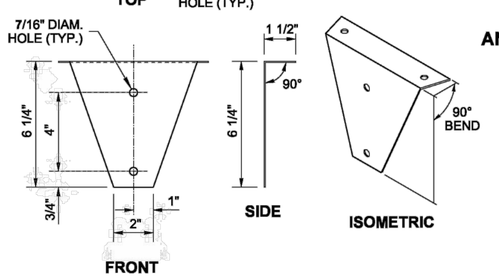

BRACKET DETAIL

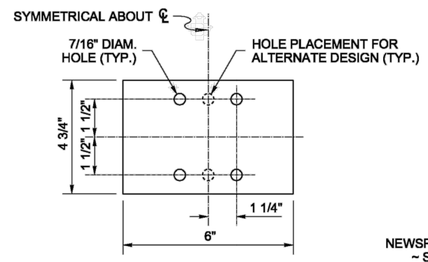

ANTI-TWIST PLATE DETAIL

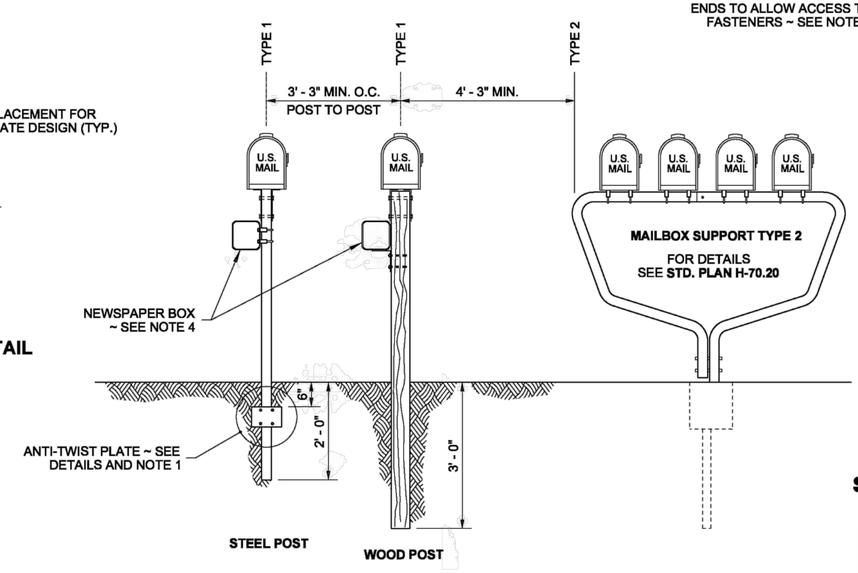

POST PLACEMENT DETAIL

BAKOTICH, PASCO III
STATE OF WASHINGTON
24557
REGISTERED
PROFESSIONAL ENGINEER

NOTE: THIS PLAN IS NOT A LEGAL ENGINEERING DOCUMENT BUT AN ELECTRONIC DUPLICATE. THE ORIGINAL, SIGNED BY THE APPROPRIATE ENGINEER, WITH ORIGINAL SEAL, IS KEPT ON FILE AT THE WASHINGTON STATE DEPARTMENT OF TRANSPORTATION. A COPY MAY BE OBTAINED UPON REQUEST.

MAILBOX SUPPORT TYPE 1

STANDARD PLAN H-70.10-01

SHEET 2 OF 2 SHEETS

APPROVED FOR PUBLICATION

Pasco Bakotich III — STATE DESIGN ENGINEER — *02-07-12* — DATE

Washington State Department of Transportation

95% SUBMITTAL

DAVID EVANS AND ASSOCIATES INC.
415 - 118th Avenue SE
Bellevue Washington 98005-3518
Phone: 425.519.6500

NO.	DATE	DESCRIPTION	BY

DOGWOOD ST. BRIDGE REPLACEMENT

DRAWN OXA | DSGN. KXLA | CHKD. MLF

CITY OF ISSAQUAH

KAYLA MARIE PLROTTE
STATE OF WASHINGTON
50489
REGISTERED
PROFESSIONAL ENGINEER

STANDARD DETAILS

DATE: APRIL 2014 | JOB # BRM-1408(002) | SCALE: AS NOTED

oxa 04/21/14 5:56pm – \\bivfs1\project\V\VSSY00000002\0400CAD\TTSHEETS\TTSTD16ISSY002.dwg

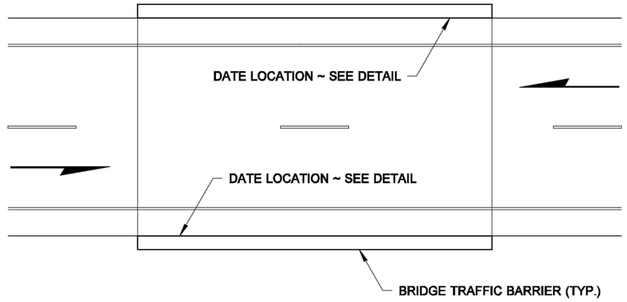

PLAN VIEW

DATE LOCATION ON TWO-WAY BRIDGES

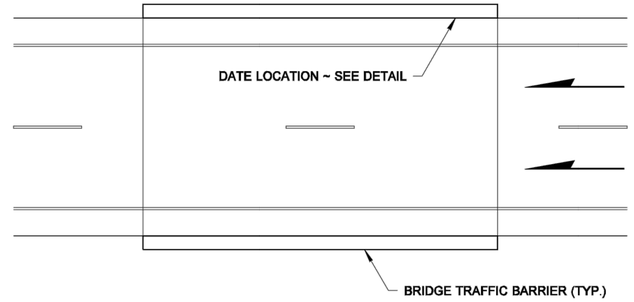

PLAN VIEW

DATE LOCATION ON ONE-WAY BRIDGES

NOTES

1. All numerals are approx. 3 1/4" wide except numeral "1" which is approx. 5/8" wide.
2. Spacing between the numeral "1" and any other numeral is 1". Spacing between all other numerals is 3/4".
3. Traffic Barrier Connections between the bridge and the approaching roadway vary and may consist of concrete barrier extensions. Install the Date Numerals on the traffic barrier of the bridge itself.

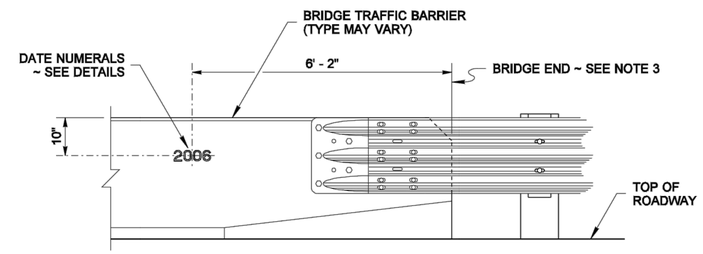

ELEVATION VIEW

DATE LOCATION DETAIL

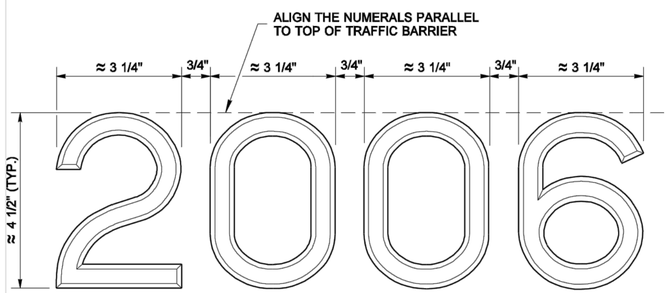

TYPICAL DATE NUMERALS

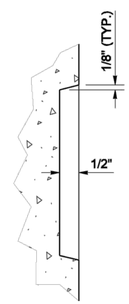

TYPICAL SECTION VIEW

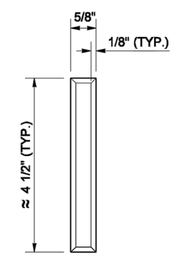

NUMERAL "1"

DATE NUMERAL DETAILS

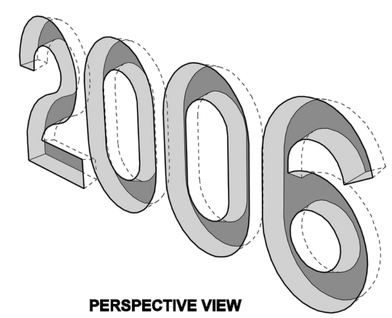

PERSPECTIVE VIEW

KEN LEROY SMITH
STATE OF WASHINGTON
31805
REGISTERED
PROFESSIONAL ENGINEER

EXPIRES AUGUST 26, 2007

NOTE: THIS PLAN IS NOT A LEGAL ENGINEERING DOCUMENT BUT AN ELECTRONIC DUPLICATE. THE ORIGINAL, SIGNED BY THE ENGINEER, AND APPROVED PLANS ARE ON FILE IN LIEU OF FILE AT THE WASHINGTON STATE DEPARTMENT OF TRANSPORTATION. A COPY MAY BE OBTAINED UPON REQUEST.

DATE NUMERAL PLACEMENT ON BRIDGE TRAFFIC BARRIER STANDARD PLAN E-1

SHEET 1 OF 1 SHEET

APPROVED FOR PUBLICATION

Ken L. Smith — STATE DESIGN ENGINEER
02-21-07 — DATE

Washington State Department of Transportation

95% SUBMITTAL

DAVID EVANS AND ASSOCIATES INC.
415 - 118th Avenue SE
Bellevue Washington 98005-3518
Phone: 425.519.6500

NO.	DATE	DESCRIPTION	BY

DOGWOOD ST. BRIDGE REPLACEMENT

DRAWN OXA | DSGN. KXLA | CHKD. MLF

CITY OF ISSAQUAH

KAYLA MARIE PIROTTE
STATE OF WASHINGTON
50489
REGISTERED
PROFESSIONAL ENGINEER

STANDARD DETAILS

DATE: APRIL 2014 | JOB # BRM-1408(002) | SCALE: AS NOTED

oxa 04/21/14 5:57pm – \\bvfs1\project\V\VSSY00000002\04000AD\TT\SHEETS\TTST01715SSY002.dwg

DRAWN BY: MARK SUJKA

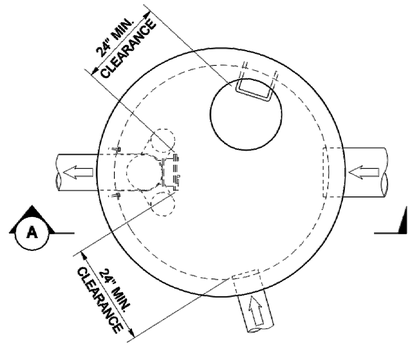

PLAN VIEW

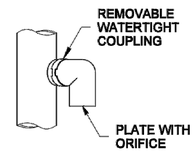

ELBOW DETAIL

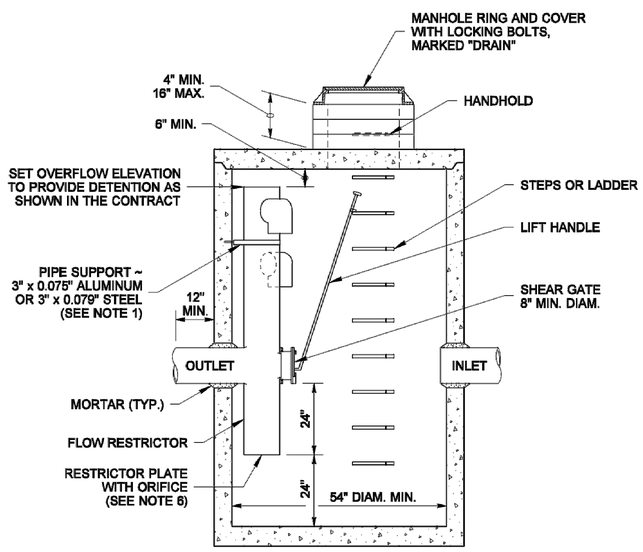

VIEW (A)

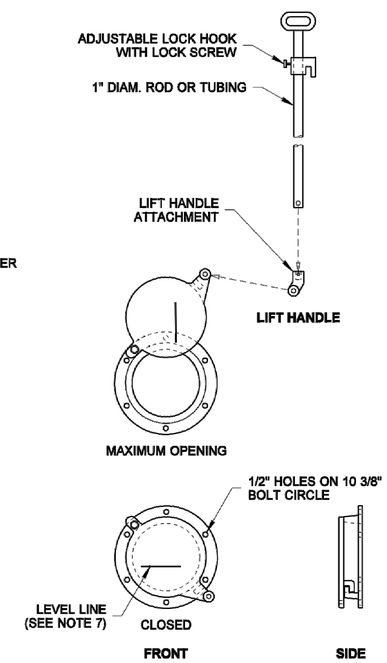

SHEAR GATE DETAILS

NOTES

1. The pipe supports and the flow restrictor shall be constructed of the same material and be anchored at a maximum spacing of 36". Attach the pipe supports to the manhole with 5/8" stainless steel expansion bolts or embed the supports into the manhole wall 2".
2. The vertical riser stem of the flow restrictor shall be the same diameter as the horizontal outlet pipe with a minimum diameter of 8".
3. The flow restrictor shall be fabricated from one of the following materials:

   0.060" Corrugated Aluminum Alloy Drain Pipe
   0.064" Corrugated Galvanized Steel Drain Pipe with Treatment 1
   0.064" Corrugated Aluminized Steel Drain Pipe
   0.060" Aluminum alloy flat sheet, in accordance with ASTM B 209, 5052 H32 or EPS
   High Density Polyethylene Storm Sewer Pipe
4. The frame and ladder or steps are to be offset so that: the shear gate is visible from the top; the climb-down space is clear of the riser and gate; the frame is clear of the curb.
5. The multi-orifice elbows may be located as shown, or all placed on one side of the riser to assure ladder clearance. The size of the elbows and their placement shall be specified in the Contract.
6. Restrictor plate with orifice as specified in the Contract. The opening is to be cut round and smooth.
7. The shear gate shall be made of aluminum alloy in accordance with ASTM B 26 and ASTM B 275, designation ZG32A; or cast iron in accordance with ASTM A 48, Class 30B.

   The lift handle shall be made of a similar metal to the gate (to prevent galvanic corrosion), it may be of solid rod or hollow tubing, with adjustable hook as required.

   A neoprene rubber gasket is required between the riser mounting flange and the gate flange.

   Install the gate so that the level-line mark is level when the gate is closed.

   The mating surfaces of the lid and the body shall be machined for proper fit.

   All shear gate bolts shall be stainless steel.
8. The shear gate maximum opening shall be controlled by limited hinge movement, a stop tab, or some other device.
9. Alternative shear gate designs are acceptable if material specifications are met and flange bolt pattern matches.

EXPIRES JULY 1, 2007

NOTE: THIS PLAN IS NOT A LEGAL ENGINEERING DOCUMENT BUT AN ELECTRONIC DUPLICATE. THE ORIGINAL, SIGNED BY THE ENGINEER, IS ON FILE AT THE WASHINGTON STATE DEPARTMENT OF TRANSPORTATION. A COPY MAY BE OBTAINED UPON REQUEST.

CATCH BASIN TYPE 2 WITH FLOW RESTRICTOR

STANDARD PLAN B-10.40-00

SHEET 1 OF 1 SHEET

APPROVED FOR PUBLICATION

Harold J. Peterfeso — STATE DESIGN ENGINEER — *06-01-06* — DATE

Washington State Department of Transportation

95% SUBMITTAL

DAVID EVANS AND ASSOCIATES INC.
415 - 118th Avenue SE
Bellevue Washington 98005-3518
Phone: 425.519.6500

NO.	DATE	DESCRIPTION	BY

DOGWOOD ST. BRIDGE REPLACEMENT

DRAWN OXA | DSGN. KXLA | CHKD. MLF

CITY OF ISSAQUAH

KAYLA MARIE PLEROTTE — STATE OF WASHINGTON — 50489 — REGISTERED PROFESSIONAL ENGINEER

STANDARD DETAILS

DATE: APRIL 2014 | JOB # BRM-1408(002) | SCALE: AS NOTED

SHEET 66 OF 68

oxa 04/21/14 6:05pm – \\bivfs1\project\V\SS\000000002\0400CAD\TT\SHEETS\TTST01B1SS\002.dwg

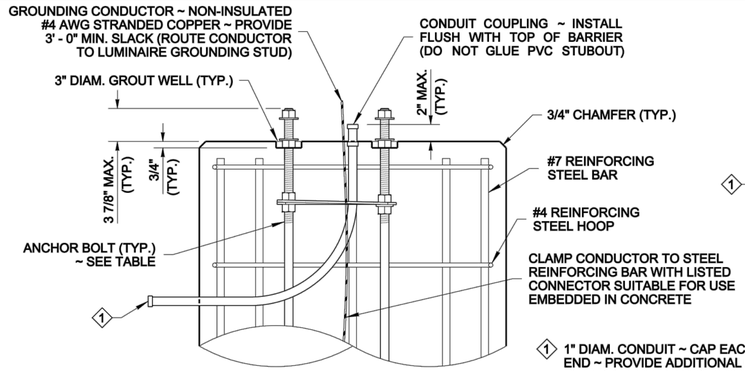

PARTIAL ELEVATION VIEW

SLIP BASE

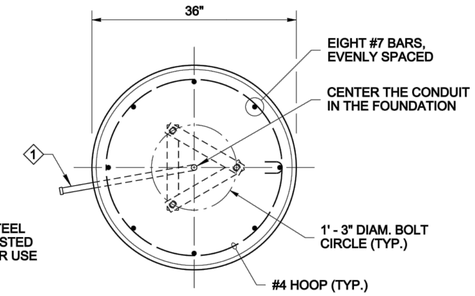

TOP VIEW

FIXED BASE

1 1" DIAM. CONDUIT ~ CAP EACH END ~ PROVIDE ADDITIONAL CONDUIT FOR COMMUNICATION OR SIGNAL CABLE WHERE SHOWN IN THE CONTRACT

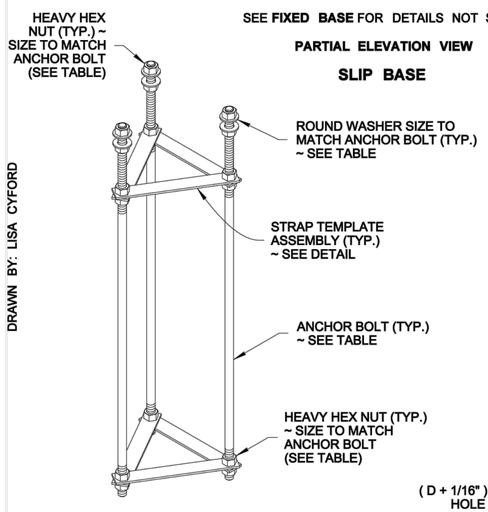

ISOMETRIC VIEW

ANCHOR BOLT ASSEMBLY

(SLIP BASE SHOWN)

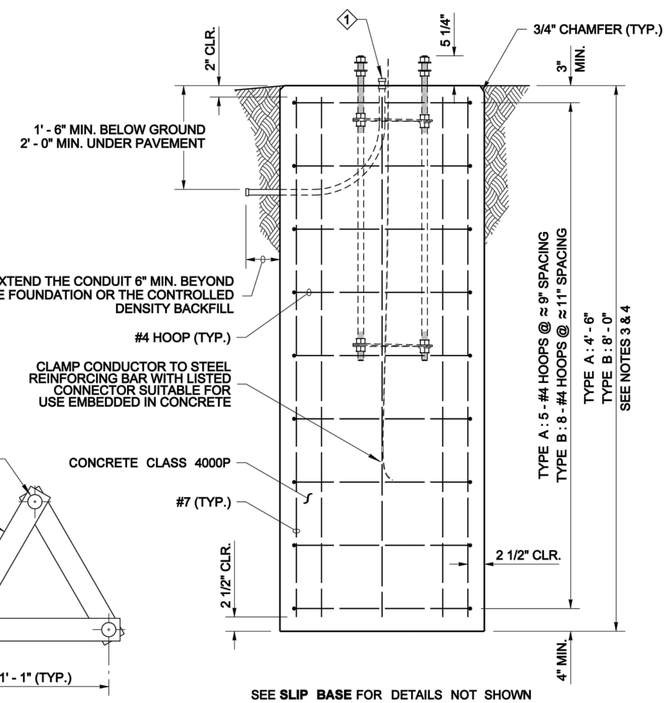

SEE SLIP BASE FOR DETAILS NOT SHOWN

ELEVATION VIEW

FIXED BASE

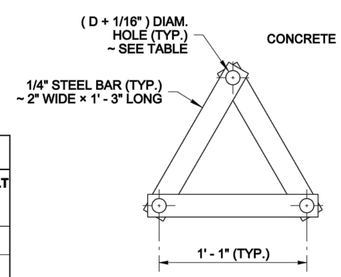

TOP VIEW

STRAP TEMPLATE ASSEMBLY

ANCHOR BOLT TABLE			
LUMINAIRE HEIGHT (H1)	MAST ARM TYPE	MAST ARM LENGTH	ANCHOR BOLT DIAMETER "D"
20' TO 50'	SINGLE	6' TO 16'	1"
20' TO 50'	DOUBLE	6' TO 8'	1"
20' TO 45'	DOUBLE	10' TO 16'	1"
46' TO 50'	DOUBLE	10' TO 16'	1 1/8"

NOTES

1. See **Standard Plan J-28.40** for Luminaire Pole base mounting details.
2. The Strap Templates shall be held in place by nuts, 6" from the top of the foundation and 3" from the bottom of the anchor bolts. 18 heavy duty hex nuts and 6 round washers are required for a Slip Base assembly. 18 heavy duty hex nuts and 6 plate washers are required for a Fixed Base assembly.
3. Use Steel Light Standard Foundation **Type A** on level ground or slopes not exceeding 4H : 1V. Use **Type B** for slopes steeper than 4H : 1V, but not exceeding 2H : 1V. Slopes steeper than 2H : 1V shall require a special design.
4. These foundations are designed for a minimum of 2000 PSF **(TYPE A)** or 1500 PSF **(TYPE B)** allowable lateral bearing pressure for the soil. A special foundation shall be required for soil with allowable lateral bearing pressure lower than 1500 PSF.
5. The Luminaire Pole height shall not exceed 50' (H1).
6. Slip Bases shall not be installed on 50' (H1) poles with Double Mast Arms, nor on poles weighing more than 1000 lbs.
7. Slip Bases are not required on poles placed outside of the Design Clear Zone, nor on poles installed behind traffic barrier.
8. Foundations constructed within Ecology Embankments shall be increased in depth by the depth of the Ecology Embankment.
9. Exposed portions of the foundation shall be formed to create a Class 2 surface finish. All forming shall be removed upon completion of foundation construction.
10. For excavation, concrete placement, and backfill options, see METHOD 1 and METHOD 2 on Sheet 2 of 2.
11. The Anchor Bolts shall be high-strength steel, manufactured from ASTM A449, with heavy hex nuts and hardened washers. Galvanize the Anchor Bolts according to AASHTO M232.
12. The foundation shall be grounded in accordance with the requirements of **Standard Specification 8-20.3(4).**
13. See **Standard Plans C-8b** and **C-85.14** for steel light standards on traffic barrier.

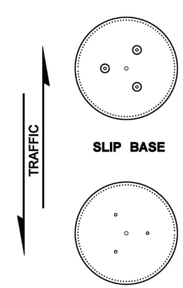

SLIP BASE

FIXED BASE

ANCHOR BOLT LAYOUT

RICHARD P. ZELDENRUST
STATE OF WASHINGTON
25470
STRUCTURAL ENGINEER
PROFESSIONAL ENGINEER

NOTE: THIS PLAN IS NOT A LEGAL ENGINEERING DOCUMENT BUT AN ELECTRONIC DUPLICATE. THE ORIGINAL SIGNED BY THE ENGINEER AND APPROVED PLAN IS A MATTER OF RECORD ON FILE AT THE WASHINGTON STATE DEPARTMENT OF TRANSPORTATION. A COPY MAY BE OBTAINED UPON REQUEST.

STEEL LIGHT STANDARD FOUNDATION TYPES A & B

STANDARD PLAN J-28.30-02

SHEET 1 OF 2 SHEETS

APPROVED FOR PUBLICATION

Pasco Bakotich III — STATE DESIGN ENGINEER — 06-27-11 — DATE

Washington State Department of Transportation

95% SUBMITTAL

DRAWN BY: LISA CYFORD

oxa 04/21/14 5:57pm – \\blvfs1\project\V\VSSY00000002\0400CAD\TT\SHEETS\TTST0195SSY002.dwg

DAVID EVANS AND ASSOCIATES INC.
415 - 118th Avenue SE
Bellevue Washington 98005-3518
Phone: 425.519.6500

NO.	DATE	DESCRIPTION	BY

DOGWOOD ST. BRIDGE REPLACEMENT

DRAWN OXA | DSGN. KXLA | CHKD. MLF

CITY OF ISSAQUAH

KAYLA MARIE PIROTTE — STATE OF WASHINGTON — 50489 — REGISTERED PROFESSIONAL ENGINEER

STANDARD DETAILS

DATE: APRIL 2014 | JOB # BRM-1408(002) | SCALE: AS NOTED

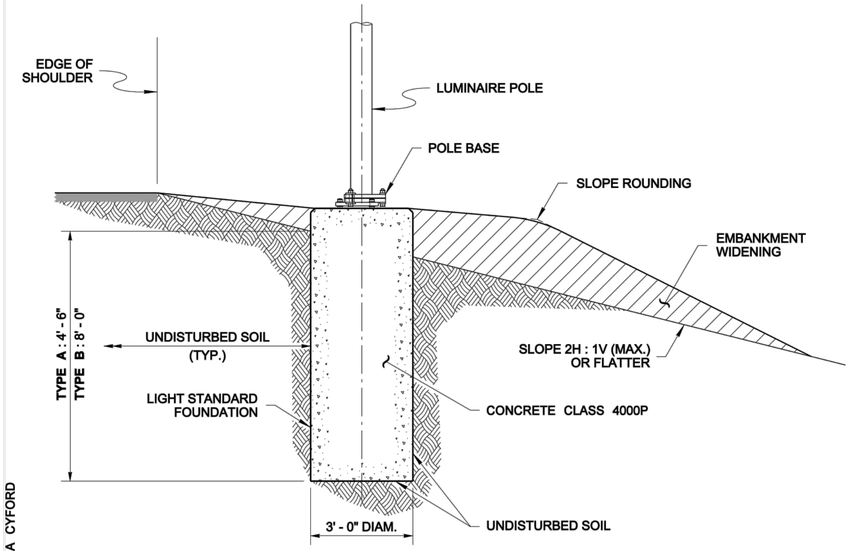

(CASE A SHOWN)

METHOD 1

NO SUBSURFACE FORM

This option is only used when the existing soil in the hole will remain standing and the cement concrete can be placed without causing the soil to collapse. Concrete shall be cast directly against undisturbed soil.

Auger the hole for the foundation. Use paper or cardboard form to achieve a smooth finish on the final exposed cement concrete. Support the form as necessary to remain plumb.

See **Standard Plans J-28.24** and **J-28.26** for maximum heights of exposed foundation when no embankment widening is to be installed.

Place the concrete foundation.

After concrete has cured, remove the paper or cardboard form portion.

Construct the embankment widening (if required).

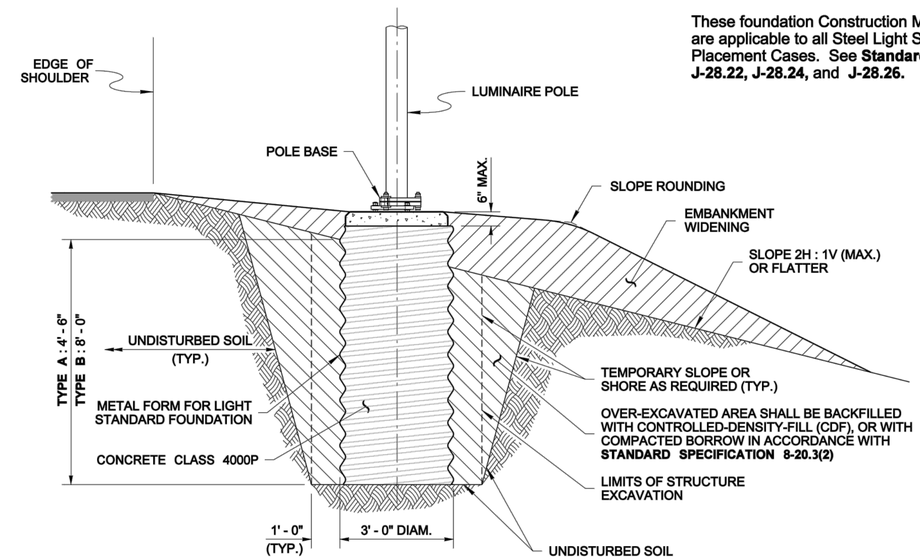

(CASE A SHOWN)

METHOD 2

METAL (SUBSURFACE) FORM REQUIRED

When the existing soil will not retain a vertical face, over-excavate the foundation area and install a 36" diameter, corrugated metal (pipe) form. The corrugated metal form shall not extend more than 6" below any portion of the foundation that will remain exposed upon final grading. Continue forming to full height using paper or cardboard form to achieve a smooth finish on final exposed cement concrete. Support the form as necessary to remain plumb.

See **Standard Plans J-28.24** and **J-28.26** for maximum heights of exposed foundation when no embankment widening is to be installed.

Place the concrete foundation.

After concrete has cured, remove the paper or cardboard form portion.

Backfill with controlled-density fill or compacted borrow in accordance with **Standard Specification 8-20.3(2).**

Construct the embankment widening (if required).

CONSTRUCTION METHODS

NOTE

These foundation Construction Methods are applicable to all Steel Light Standard Placement Cases. See **Standard Plans J-28.22, J-28.24,** and **J-28.26.**

RICHARD P. ZELDENRUST
STATE OF WASHINGTON
25470
STRUCTURAL ENGINEER
PROFESSIONAL ENGINEER

NOTE: THIS PLAN IS NOT A LEGAL ENGINEERING DOCUMENT BUT AN ELECTRONIC DUPLICATE. THE ORIGINAL SIGNED BY THE ENGINEER AND STAMPED WITH THE ENGINEER'S SEAL IS ON FILE AT THE WASHINGTON STATE DEPARTMENT OF TRANSPORTATION. A COPY MAY BE OBTAINED UPON REQUEST.

STEEL LIGHT STANDARD FOUNDATION TYPES A & B

STANDARD PLAN J-28.30-02

SHEET 2 OF 2 SHEETS

APPROVED FOR PUBLICATION

Pasco Bakotich III — 06-27-11
STATE DESIGN ENGINEER — DATE

Washington State Department of Transportation

DRAWN BY: LISA CYFORD

95% SUBMITTAL

DAVID EVANS AND ASSOCIATES INC.
415 - 118th Avenue SE
Bellevue Washington 98005-3518
Phone: 425.519.6500

NO.	DATE	DESCRIPTION	BY

DOGWOOD ST. BRIDGE REPLACEMENT

CITY OF ISSAQUAH

KAYLA MARIE PLOTTE
STATE OF WASHINGTON
50489
REGISTERED
PROFESSIONAL ENGINEER

STANDARD DETAILS

DRAWN OXA | DSGN. KXLA | CHKD. MLF | DATE: APRIL 2014 | JOB # BRM-1408(002) | SCALE: AS NOTED

SHEET 68 OF 68

oxa 04/21/14 5:57pm – \\blvfs1\project\V\ISSY0000002\04000CAD\TT\SHEETS\TTS1020ISSY002.dwg