VOLUME/PAGE

AMENDMENT NO. TEN TO

FOREST VILLAGE

A CONDOMINIUM

A PORTION OF THE NE 1/4 & SE 1/4 SEC. 16, T. 24 N., R. 6 E., W.M.
KING COUNTY, WASHINGTON

ACKNOWLEDGMENT

STATE OF WASHINGTON)
COUNTY OF KING))SS.

I CERTIFY THAT I KNOW, OR HAVE SATISFACTORY EVIDENCE, THAT La Mar Hansen SIGNED THIS INSTRUMENT, AND ON OATH, STATED THAT he WAS AUTHORIZED TO EXECUTE THE INSTRUMENT AND ACKNOWLEDGED IT, AS THE President OF SWANSON-DEAN/DAEWOO, LLP, A WASHINGTON LIMITED LIABILITY PARTNERSHIP, TO BE THE FREE AND VOLUNTARY ACT OF SUCH PARTY FOR THE USES AND PURPOSES MENTIONED IN THE INSTRUMENT.

PATRICIA J. CARLSON COMMISSION EXPIRES NOTARY PUBLIC 1-27-02 STATE OF WASHINGTON

DATED: December 2, 1999

Patricia Carlson
NOTARY PUBLIC IN AND FOR THE STATE OF WASHINGTON

MY APPOINTMENT EXPIRES 01-27-02

ACKNOWLEDGMENT

STATE OF WASHINGTON)
COUNTY OF KING))SS.

I CERTIFY THAT I KNOW OR HAVE SATISFACTORY EVIDENCE THAT C.K. Hong SIGNED THIS INSTRUMENT, ON OATH, STATED THAT he WAS AUTHORIZED TO EXECUTE THE INSTRUMENT ACKNOWLEDGED IT, AS THE authorized agent OF DAEWOO INTERNATIONAL (AMERICA) CORPORATION, A NEW YORK CORPORATION, TO BE THE FREE AND VOLUNTARY ACT OF SUCH PARTY FOR THE USES AND PURPOSES MENTIONED IN THE INSTRUMENT.

PATRICIA J. CARLSON COMMISSION EXPIRES NOTARY PUBLIC 1-27-02 STATE OF WASHINGTON

DATED: December 2, 1999

Patricia Carlson
NOTARY PUBLIC IN AND FOR THE STATE OF WASHINGTON

MY APPOINTMENT EXPIRES 01-27-02

RECORDING CERTIFICATE 1999/2090007 79

FILED FOR RECORD AT THE REQUEST OF THE SWANSON-DEAN/DAEWOO, LLP, A WASHINGTON LIMITED LIABILITY PARTNERSHIP, THIS 9th DAY OF Dec 19 99 A.D., AT 26 MINUTES PAST 1:0 .M. AND RECORDED IN VOLUME 160 OF CONDOMINIUMS, PAGE(S) 73-80 RECORDS OF KING COUNTY, WASHINGTON.

Bob Bruce
MANAGER
DIVISION OF RECORDS AND ELECTIONS

Scott Washington
SUPERINTENDENT OF RECORDS
DIVISION OF RECORDS AND ELECTIONS

ASSESSOR'S CERTIFICATE

EXAMINED AND APPROVED THIS 8th DAY OF December, 19 99.

DEPARTMENT OF ASSESSMENTS

Debra Clark
DEPUTY KING COUNTY ASSESSOR

Scott Noble
KING COUNTY ASSESSOR

DECLARATION

KNOW ALL PERSONS BY THESE PRESENTS THAT WE, THE UNDERSIGNED ARE THE OWNERS OF THE REAL PROPERTY HEREIN DESCRIBED, HEREBY DECLARE THIS SURVEY MAP AND SURVEY PLANS AND DEDICATE THE SAME FOR A CONDOMINIUM SOLELY TO MEET THE REQUIREMENTS OF THE WASHINGTON CONDOMINIUM ACT RCW 64.34., ET SEQ., AND NOT FOR ANY PUBLIC PURPOSE. WE FURTHER CERTIFY THAT ALL STRUCTURAL COMPONENTS AND MECHANICAL SYSTEMS OF ALL BUILDINGS CONTAINING OR COMPRISING ANY UNITS HEREBY CREATED ARE SUBSTANTIALLY COMPLETE. THIS SURVEY MAP AND THESE PLANS AND ANY PORTION THEREOF ARE RESTRICTED BY LAW AND THE DECLARATION AND COVENANTS, CONDITIONS, RESTRICTIONS, EASEMENTS AND RESERVATIONS FOR FOREST VILLAGE, A CONDOMINIUM, RECORDED CONCURRENTLY UNDER KING COUNTY RECORDING NO. 19991209000780

DATED THIS 9TH DAY OF DECEMBER, 1999.

SWANSON-DEAN/DAEWOO, LLP
A WASHINGTON LIMITED LIABILITY PARTNERSHIP

DAEWOO INTERNATIONAL (AMERICA) CORPORATION
A NEW YORK CORPORATION

SURVEYOR'S CERTIFICATE

I HEREBY CERTIFY THAT THIS SURVEY MAP AND THESE SURVEY PLANS FOR FOREST VILLAGE, A CONDOMINIUM, ARE BASED UPON AN ACTUAL SURVEY OF THE PROPERTY HEREIN DESCRIBED, AND THAT THE COURSES AND DISTANCES ARE SHOWN CORRECTLY HEREON, AND THAT, TO THE BEST OF MY KNOWLEDGE AND BELIEF, I HAVE FULLY COMPLIED WITH THE PROVISIONS OF THE STATUTES GOVERNING CONDOMINIUMS AND THAT THE PLANS ACCURATELY DEPICT THE APARTMENT NUMBERS, DIMENSIONS AND LOCATIONS OF THE UNITS AS BUILT.

ROBERT M. FITZMAURICE, P.L.S. # 32437

STATE OF WASHINGTON
COUNTY OF KING

ROBERT M. FITZMAURICE STATE OF WASHINGTON 32437 REGISTERED PROFESSIONAL LAND SURVEYOR EXPIRES JUNE 4, 2000

DEC 1, 1999

ROBERT M. FITZMAURICE, BEING FIRST DULY SWORN ON OATH, DEPOSES AND SAYS: I AM A REGISTERED PROFESSIONAL LAND SURVEYOR IN THE STATE OF WASHINGTON AND AM THE PERSON WHO HAS MADE AND EXECUTED THE FOREGOING CERTIFICATE. I HAVE READ THE SAME, KNOW THE CONTENTS THEREOF, AND BELIEVE THE SAME TO BE TRUE. SUBSCRIBED AND SWORN TO BEFORE ME THIS 1st DAY OF DECEMBER, 1999.

NOTARY PUBLIC IN AND FOR THE STATE OF WASHINGTON

PHILLIP W. HARSKAMP COMMISSION EXPIRES NOTARY PUBLIC AUG. 6, 2003 STATE OF WASHINGTON

RESIDING AT: REDMOND

MY APPOINTMENT EXPIRES AUG 6, 2003

DOWL ENGINEERS
A Division of DOWL, Incorporated

DOWL FILE NO. S105-10A

VOLUME/PAGE 160 73

FILENAME: S:\5164\VAMD10-1.DWG CREATED: APR 03 1998 16:47:45 UPDATED: DEC 01 1999 14:43:25 PLOTTED: DEC 01 1999 14:44:02 (PWH) © DOWL 1998

VOLUME/PAGE

AMENDMENT NO. TEN TO

FOREST VILLAGE

A CONDOMINIUM

A PORTION OF THE NE 1/4 & SE 1/4 SEC. 16, T. 24 N., R. 6 E., W.M.
KING COUNTY, WASHINGTON

LEGAL DESCRIPTIONS

PARCEL 198

THAT PORTION OF THE NORTHEAST QUARTER OF THE SOUTHEAST QUARTER OF SECTION 16, TOWNSHIP 24 NORTH, RANGE 6 EAST, W.M., IN KING COUNTY, WASHINGTON, BEING MORE PARTICULARLY DESCRIBED AS FOLLOWS:

COMMENCING AT THE EAST ONE QUARTER CORNER OF SAID SECTION;
THENCE N 88°04'01" W 30.00 FEET TO THE WEST MARGIN OF 228TH AVENUE SE;
THENCE S 01°44'18" W 804.27 FEET ALONG THE WEST MARGIN OF 228TH AVENUE SE TO THE MOST NORTHERLY OF THE TWO MOST EASTERLY CORNERS OF DIVISION 12 OF PROVIDENCE POINT, A BINDING SITE PLAN, AMENDMENT NO. 22, RECORDING NUMBER 9906082297, RECORDS OF KING COUNTY, WASHINGTON;
THENCE ALONG THE BOUNDARY THEREOF AND THE WEST MARGIN OF 228TH AVENUE SE S 01°44'18" W 318.33 FEET;
THENCE N 88°15'42" W 143.67 FEET TO THE TRUE POINT OF BEGINNING;
THENCE S 31°53'26" W 83.75 FEET;
THENCE N 58°06'34" W 110.08 FEET;
THENCE N 31°53'26" E 83.75 FEET;
THENCE S 58°06'34" E 110.08 FEET TO THE TRUE POINT OF BEGINNING.

CONTAINING 9,219 SQUARE FEET (0.212 ACRES) MORE OR LESS.

PARCEL 203

THAT PORTION OF THE NORTHEAST QUARTER OF THE SOUTHEAST QUARTER OF SECTION 16, TOWNSHIP 24 NORTH, RANGE 6 EAST, W.M., IN KING COUNTY, WASHINGTON, BEING MORE PARTICULARLY DESCRIBED AS FOLLOWS:

COMMENCING AT THE EAST ONE QUARTER CORNER OF SAID SECTION;
THENCE N 88°04'01" W 30.00 FEET TO THE WEST MARGIN OF 228TH AVENUE SE;
THENCE S 01°44'18" W 804.27 FEET ALONG THE WEST MARGIN OF 228TH AVENUE SE TO THE MOST NORTHERLY OF THE TWO MOST EASTERLY CORNERS OF DIVISION 12 OF PROVIDENCE POINT, A BINDING SITE PLAN, AMENDMENT NO. 22, RECORDING NUMBER 9906082297, RECORDS OF KING COUNTY, WASHINGTON;
THENCE ALONG THE BOUNDARY THEREOF AND THE WEST MARGIN OF 228TH AVENUE SE S 01°44'18" W 222.73 FEET;
THENCE N 88°15'42" W 607.68 FEET;
THENCE N 87°15'41" W 235.72 FEET;
THENCE N 02°44'19" E 6.49 FEET TO THE TRUE POINT OF BEGINNING;
THENCE N 87°15'41" W 157.89 FEET;
THENCE N 02°44'19" E 86.00 FEET;
THENCE S 87°15'41" E 157.89 FEET;
THENCE S 02°44'19" W 86.00 FEET TO THE TRUE POINT OF BEGINNING.

CONTAINING 13,579 SQUARE FEET (0.312 ACRES) MORE OR LESS.

LEGAL DESCRIPTIONS

PARCEL 204

THAT PORTION OF THE NORTHEAST QUARTER OF THE SOUTHEAST QUARTER OF SECTION 16, TOWNSHIP 24 NORTH, RANGE 6 EAST, W.M., IN KING COUNTY, WASHINGTON, BEING MORE PARTICULARLY DESCRIBED AS FOLLOWS:

COMMENCING AT THE EAST ONE QUARTER CORNER OF SAID SECTION;
THENCE N 88°04'01" W 30.00 FEET TO THE WEST MARGIN OF 228TH AVENUE SE;
THENCE S 01°44'18" W 804.27 FEET ALONG THE WEST MARGIN OF 228TH AVENUE SE TO THE MOST NORTHERLY OF THE TWO MOST EASTERLY CORNERS OF DIVISION 12 OF PROVIDENCE POINT, A BINDING SITE PLAN, AMENDMENT NO. 22, RECORDING NUMBER 9906082297, RECORDS OF KING COUNTY, WASHINGTON;
THENCE ALONG THE BOUNDARY THEREOF AND THE WEST MARGIN OF 228TH AVENUE SE S 01°44'18" W 525.40 FEET TO THE SOUTHEAST CORNER OF SAID DIVISION 12 AND THE SOUTH LINE OF THE NORTHEAST QUARTER OF THE SOUTHEAST QUARTER OF SAID SECTION;
THENCE ALONG THE BOUNDARY OF SAID DIVISION 12 AND SAID SOUTH LINE OF THE NORTHEAST QUARTER OF THE SOUTHEAST QUARTER N 87°43'35" W 1066.01 FEET
THENCE N 02°16'25" E 237.81 FEET;
THENCE N 12°49'23" E 139.05 FEET;
THENCE N 72°33'26" W 7.07 FEET TO THE TRUE POINT OF BEGINNING;
THENCE N 72°33'26" W 20.48 FEET;
THENCE N 60°10'49" W 63.75 FEET;
THENCE N 29°49'11" E 110.08 FEET;
THENCE S 60°10'49" E 83.75 FEET;
THENCE S 29°49'11" W 105.69 FEET TO THE TRUE POINT OF BEGINNING.

CONTAINING 9,176 SQUARE FEET (0.211 ACRES) MORE OR LESS.

TRACT RR

THAT PORTION OF THE SOUTHEAST QUARTER OF THE NORTHEAST QUARTER OF SECTION 16, TOWNSHIP 24 NORTH, RANGE 6 EAST, W.M., IN KING COUNTY, WASHINGTON, DESCRIBED AS FOLLOWS:

COMMENCING AT THE EAST ONE QUARTER CORNER OF SAID SECTION;
THENCE ALONG THE EAST LINE OF SAID SOUTHEAST QUARTER OF THE NORTHEAST QUARTER N 01°44'28" E 584.55 FEET;
THENCE N 88°15'32" E 37.28 FEET TO THE TRUE POINT OF BEGINNING;
THENCE S 25°57'48" W 59.60 FEET;
THENCE N 64°02'12" W 49.60 FEET;
THENCE N 25°57'48" E 59.60 FEET;
THENCE S 64°02'12" E 49.60 FEET TO THE TRUE POINT OF BEGINNING.

CONTAINING 2,956 SQUARE FEET MORE OR LESS.

DEC 1, 1997

ROBERT M. FITZMAURICE
STATE OF WASHINGTON
38197
REGISTERED PROFESSIONAL LAND SURVEYOR
EXPIRES JUNE 4, 2000

DOWL ENGINEERS
A Division of DOWL, Incorporated

DOWL FILE NO. S105-10B

VOLUME/PAGE 160 74

FILENAME: S115160VAMD10-1.DWG CREATED: APR 03 1998 16:47:45 UPDATED: DEC 01 1999 14:43:25 PLOTTED: DEC 01 1999 14:44:13 (PWH) © DOWL 1998

UNOFFICIAL DOCUMENT

VOLUME/PAGE

AMENDMENT NO. TEN TO

FOREST VILLAGE

A CONDOMINIUM

A PORTION OF THE NE 1/4 & SE 1/4 SEC. 16, T. 24 N., R. 6 E., W.M.
KING COUNTY, WASHINGTON

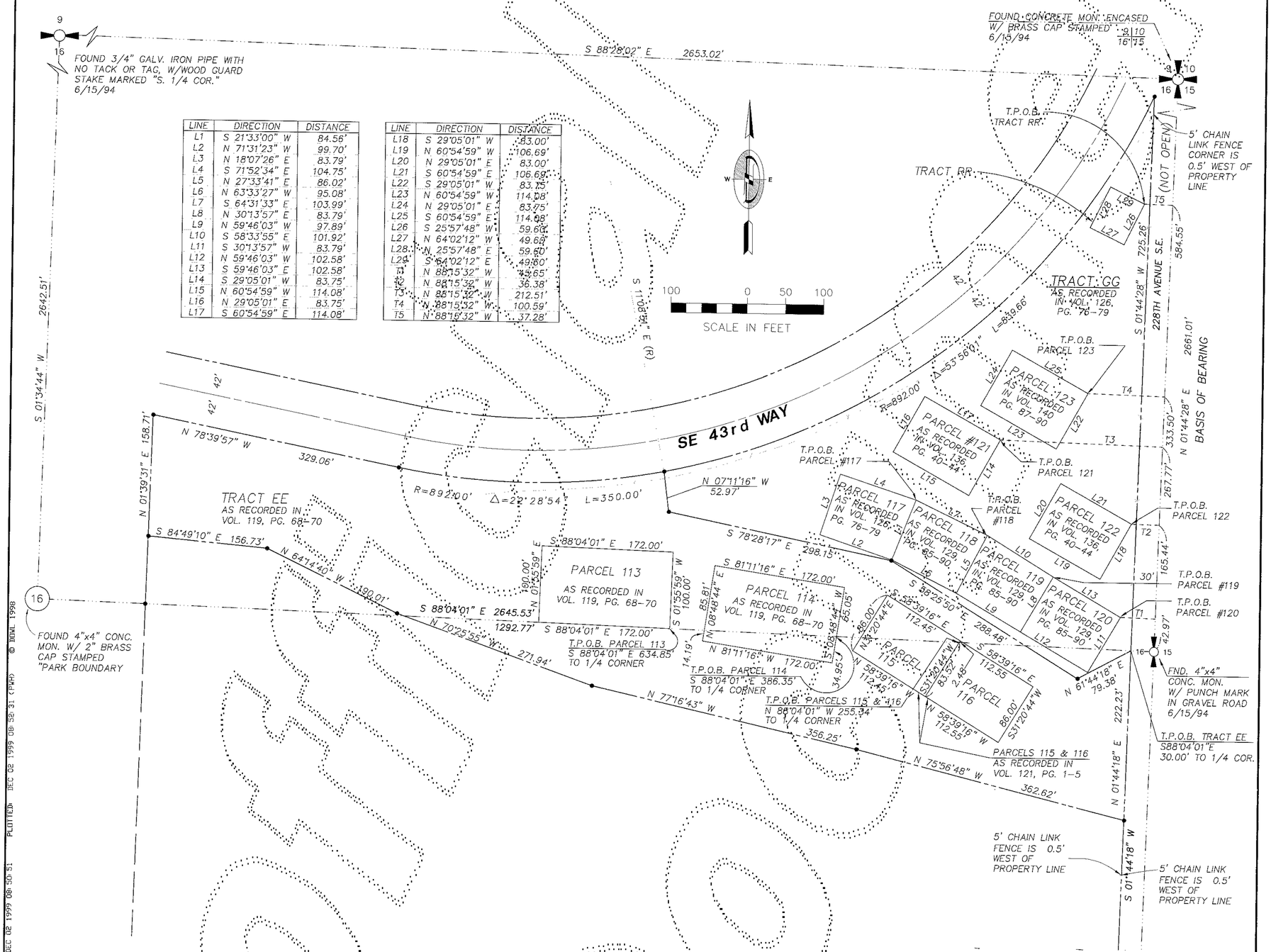

LINE	DIRECTION	DISTANCE
L1	S 21°33'00" W	84.56'
L2	N 71°31'23" W	99.70'
L3	N 18°07'26" E	83.79'
L4	S 71°52'34" E	104.75'
L5	N 27°33'41" E	86.02'
L6	N 63°33'27" W	95.08'
L7	S 64°31'33" E	103.99'
L8	N 30°13'57" E	83.79'
L9	N 59°46'03" W	97.89'
L10	S 58°33'55" E	101.92'
L11	S 30°13'57" W	83.79'
L12	N 59°46'03" W	102.58'
L13	S 59°46'03" E	102.58'
L14	S 29°05'01" W	83.75'
L15	N 60°54'59" W	114.08'
L16	N 29°05'01" E	83.75'
L17	S 60°54'59" E	114.08'

LINE	DIRECTION	DISTANCE
L18	S 29°05'01" W	83.00'
L19	N 60°54'59" W	106.69'
L20	N 29°05'01" E	83.00'
L21	S 60°54'59" E	106.69'
L22	S 29°05'01" W	83.75'
L23	N 60°54'59" W	114.08'
L24	N 29°05'01" E	83.75'
L25	S 60°54'59" E	114.08'
L26	S 25°57'48" W	59.60'
L27	N 64°02'12" W	49.60'
L28	N 25°57'48" E	59.60'
L29	S 64°02'12" E	49.60'
T1	N 88°15'32" W	45.65'
T2	N 88°15'32" W	36.38'
T3	N 88°15'32" W	212.51'
T4	N 88°15'32" W	100.59'
T5	N 88°15'32" W	37.28'

EASEMENTS:

THE TRACTS AND PARCELS IN FOREST VILLAGE ARE SUBJECT TO THE FOLLOWING EASEMENTS NOT SHOWN HEREON, EXCEPT AS NOTED BY *:

PURPOSE	RECORDING NO.
SLOPES	5012254
SLOPES	7110210313
SEWER	8406050884
SEWER	9307301617
UTILITIES	8406281165 *
UTILITIES	8801150532
TELEPHONE	8809231061
TELEPHONE	8810271349
UTILITIES	8811300727
GAS	9308131264
ELECTRICAL	8203300388
SEWER	8806150261
SEWER	8806150262
ELECTRICAL	9606280325
STORM	9711130852 *

NOTES:

1) THE FOUR DIGIT NUMBER ON EACH GARAGE AND PARKING AREA DENOTES THE UNIT WITHIN THE BUILDING TO WHICH THE GARAGE AND PARKING IS ASSIGNED.

2) SECTION LINE INFORMATION IS FROM VOL. 70, PGS. 94-99 OF CONDOMINIUMS - REVIEWED AND ACCEPTED FOR THIS SURVEY.

3) THE FIELD WORK FOR THE BUILDINGS WAS PERFORMED IN AUGUST, SEPTEMBER AND OCTOBER OF 1999.

4) THIS SURVEY WAS BASED ON A CONTROL TRAVERSE USING A TOPCON GTS-3C TOTAL STATION AND EXCEEDS THE MINIMUM STANDARDS REQUIRED BY WAC 322.130.090.

• FOUND REBAR & CAP "LS 32437"

DATUM:

1/4 COR. 16/15-3" BRASS CAP SET IN CONCRETE W/ PUNCH MARK, .20 BELOW GRADE. ELEV. = 394.55 (NGVD 29)

MERIDIAN:

ASSUMED EAST LINE OF N.E. 1/4, SEC. 16, T. 24 N., R. 6 E., W.M. BEARING N 01°44'28" E

DEC 1, 1999

ROBERT M. FITZMAURICE
STATE OF WASHINGTON
32437
REGISTERED PROFESSIONAL LAND SURVEYOR
EXPIRES JUNE 4, 2000

DOWL ENGINEERS
A Division of DOWL, Incorporated

DOWL FILE NO. S105-10C

PAGE 3 OF 8

VOLUME/PAGE 160 75

FILENAME: S115160VARDIO-2.DWG CREATED: APR 03 1998 16:49:59 UPDATED: DEC 02 1999 08:50:51 PLOTTED: DEC 02 1999 08:52:31 (PMJ) © DOWL 1998

VOLUME/PAGE

AMENDMENT NO. TEN TO

FOREST VILLAGE

A CONDOMINIUM

A PORTION OF THE NE 1/4 & SE 1/4 SEC. 16, T. 24 N., R. 6 E., W.M.
KING COUNTY, WASHINGTON

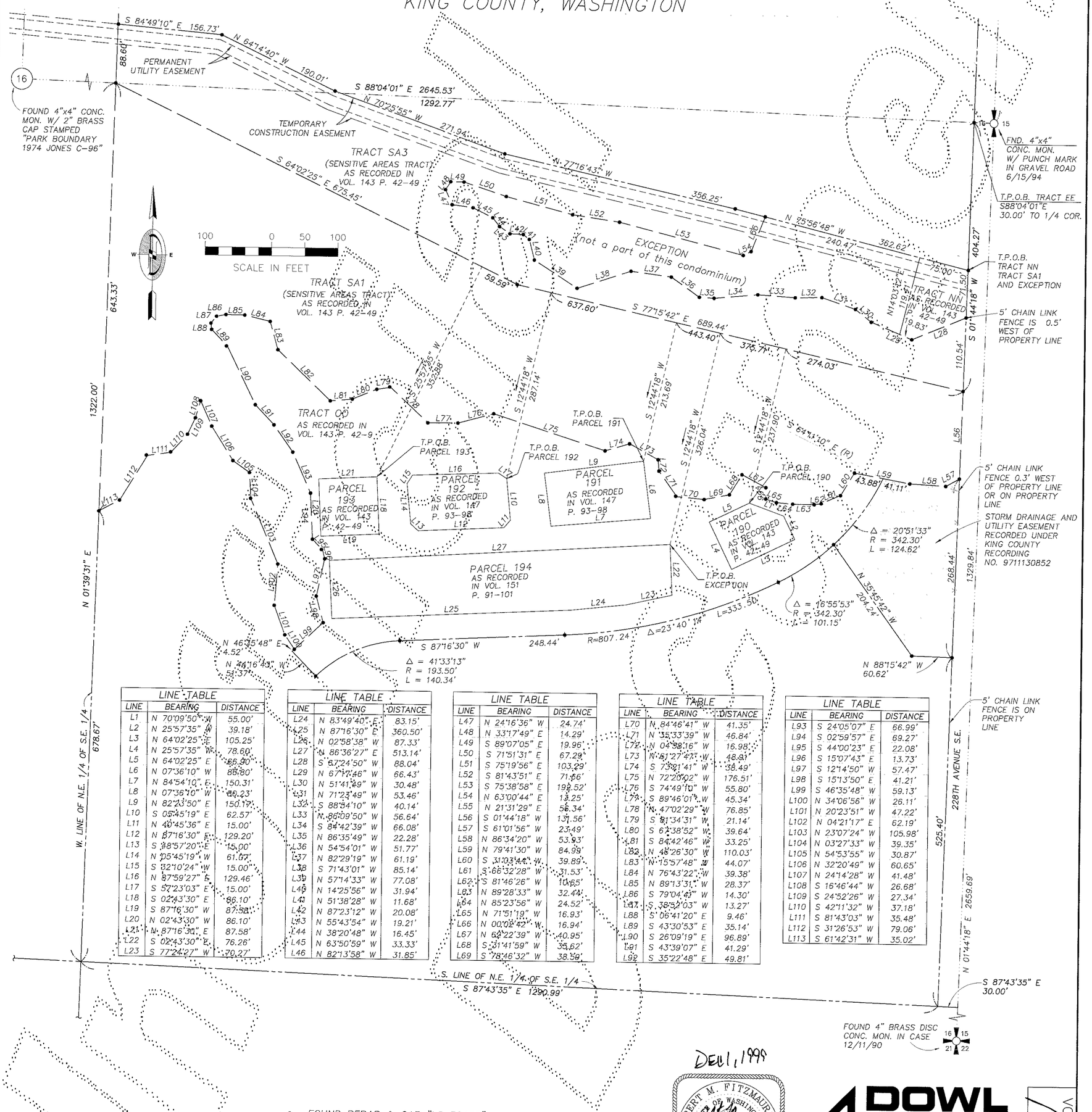

LINE TABLE		
LINE	BEARING	DISTANCE
L1	N 70°09'50" W	55.00'
L2	N 25°57'35" W	39.18'
L3	N 64°02'25" E	105.25'
L4	N 25°57'35" W	78.60'
L5	N 64°02'25" E	66.90'
L6	N 07°36'10" W	85.80'
L7	N 84°54'10" E	150.31'
L8	N 07°36'10" W	80.23'
L9	N 82°23'50" E	150.17'
L10	S 05°45'19" E	62.57'
L11	N 40°45'36" E	15.00'
L12	N 87°16'30" E	129.20'
L13	S 48°57'20" E	15.00'
L14	N 05°45'19" W	61.67'
L15	S 82°10'24" W	15.00'
L16	N 87°59'27" E	129.46'
L17	S 57°23'03" E	15.00'
L18	S 02°43'30" E	86.10'
L19	S 87°16'30" W	87.58'
L20	N 02°43'30" W	86.10'
L21	N 87°16'30" E	87.58'
L22	S 02°43'30" E	76.26'
L23	S 77°24'27" W	70.27'

LINE TABLE		
LINE	BEARING	DISTANCE
L24	N 83°49'40" E	83.15'
L25	N 87°16'30" E	360.50'
L26	N 02°58'38" W	87.33'
L27	N 86°36'27" E	513.14'
L28	S 67°24'50" W	88.04'
L29	N 67°17'46" W	66.43'
L30	N 51°41'49" W	30.48'
L31	N 71°23'49" W	53.46'
L32	S 88°54'10" W	40.14'
L33	N 86°09'50" W	56.64'
L34	S 84°42'39" W	66.08'
L35	N 86°35'49" W	22.28'
L36	N 54°54'01" W	51.77'
L37	N 82°29'19" W	61.19'
L38	S 71°43'01" W	85.14'
L39	N 57°14'33" W	77.08'
L40	N 14°25'56" W	31.94'
L41	N 51°38'28" W	11.68'
L42	N 87°23'12" W	20.08'
L43	N 55°43'54" W	19.21'
L44	N 38°20'48" W	16.45'
L45	N 63°50'59" W	33.33'
L46	N 82°13'58" W	31.85'

LINE TABLE		
LINE	BEARING	DISTANCE
L47	N 24°16'36" W	24.74'
L48	N 33°17'49" E	14.29'
L49	S 89°07'05" E	19.96'
L50	S 71°51'31" E	67.29'
L51	S 75°19'56" E	103.29'
L52	S 81°43'51" E	71.66'
L53	S 75°38'58" E	192.52'
L54	N 63°00'44" E	13.25'
L55	N 21°31'29" E	58.34'
L56	S 01°44'18" W	131.56'
L57	S 61°01'56" W	23.49'
L58	N 86°34'20" W	53.93'
L59	N 79°41'30" W	84.99'
L60	S 31°03'44" W	39.89'
L61	S 66°32'28" W	31.53'
L62	S 81°46'26" W	10.65'
L63	N 89°28'33" W	32.44'
L64	N 85°23'56" W	24.52'
L65	N 71°51'19" W	16.93'
L66	N 00°02'42" W	16.94'
L67	N 62°22'39" W	40.95'
L68	S 31°41'59" W	35.62'
L69	S 78°46'32" W	38.59'

LINE TABLE		
LINE	BEARING	DISTANCE
L70	N 84°46'41" W	41.35'
L71	N 35°33'39" W	46.84'
L72	N 04°58'16" W	16.98'
L73	N 61°27'47" W	48.91'
L74	S 73°21'41" W	38.49'
L75	N 72°20'02" W	176.51'
L76	S 74°49'10" W	55.80'
L77	S 89°46'01" W	45.34'
L78	N 47°02'29" W	76.85'
L79	S 81°34'31" W	21.14'
L80	S 62°38'52" W	39.64'
L81	S 84°42'46" W	33.25'
L82	N 46°26'30" W	110.03'
L83	N 15°57'48" W	44.07'
L84	N 76°43'22" W	39.38'
L85	N 89°13'31" W	28.37'
L86	S 79°04'43" W	14.30'
L87	S 38°52'03" W	13.27'
L88	S 06°41'20" E	9.46'
L89	S 43°30'53" E	35.14'
L90	S 26°09'19" E	96.89'
L91	S 43°39'07" E	41.29'
L92	S 35°22'48" E	49.81'

LINE TABLE		
LINE	BEARING	DISTANCE
L93	S 24°05'07" E	66.99'
L94	S 02°59'57" E	69.27'
L95	S 44°00'23" E	22.08'
L96	S 15°07'43" E	13.73'
L97	S 12°14'50" W	57.47'
L98	S 15°13'50" E	41.21'
L99	S 46°35'48" W	59.13'
L100	N 34°06'56" W	26.11'
L101	N 20°23'51" W	47.22'
L102	N 04°21'17" E	62.19'
L103	N 23°07'24" W	105.98'
L104	N 03°27'33" W	39.35'
L105	N 54°53'55" W	30.87'
L106	N 32°20'49" W	60.65'
L107	N 24°14'28" W	41.48'
L108	S 16°46'44" W	26.68'
L109	S 24°52'26" W	27.34'
L110	S 42°11'32" W	37.18'
L111	S 81°43'03" W	35.48'
L112	S 31°26'53" W	79.06'
L113	S 61°42'31" W	35.02'

• FOUND REBAR & CAP "LS 32437"

DEC 1, 1999

ROBERT M. FITZMAURICE
STATE OF WASHINGTON
32437
REGISTERED PROFESSIONAL LAND SURVEYOR
EXPIRES JUNE 4, 2000

DOWL ENGINEERS
A Division of DOWL, Incorporated

DOWL FILE NO. S105-10D

PAGE 4 OF 8

VOLUME/PAGE 160 76

FILENAME: S115ICFVAMD10-2.DWG CREATED: APR 03 1998 16:49:59 UPDATED: DEC 01 1999 14:29:41 PLOTTED: DEC 01 1999 14:30:10 (PWD) © DOWL 1998

VOLUME/PAGE

AMENDMENT NO. TEN TO

FOREST VILLAGE

A CONDOMINIUM

A PORTION OF THE NE 1/4 & SE 1/4 SEC. 16, T. 24 N., R. 6 E., W.M.
KING COUNTY, WASHINGTON

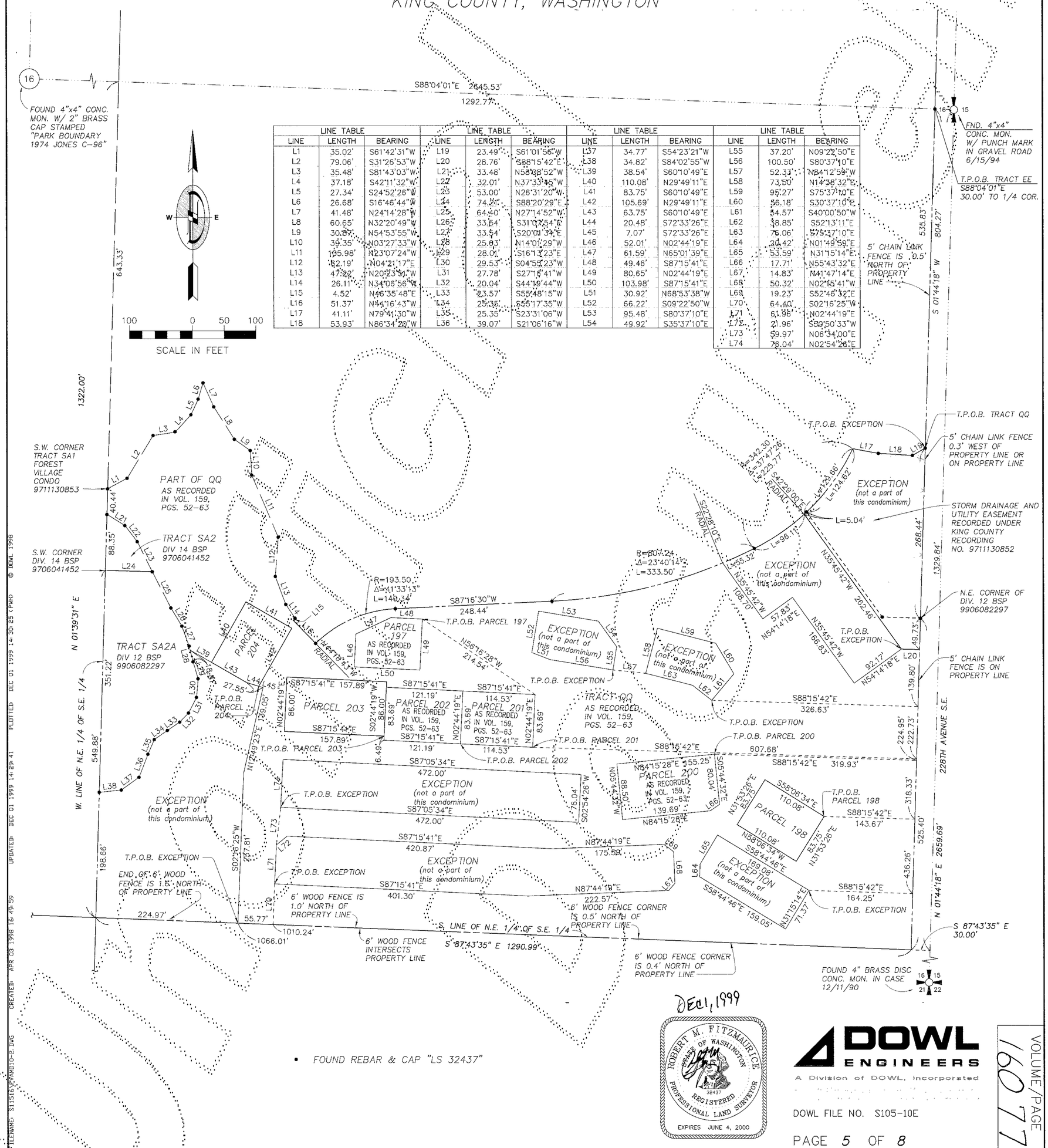

LINE TABLE			LINE TABLE			LINE TABLE			LINE TABLE		
LINE	LENGTH	BEARING	LINE	LENGTH	BEARING	LINE	LENGTH	BEARING	LINE	LENGTH	BEARING
L1	35.02'	S61°42'31"W	L19	23.49'	S61°01'56"W	L37	34.77'	S54°23'21"W	L55	37.20'	N09°22'50"E
L2	79.06'	S31°26'53"W	L20	28.76'	S88°15'42"E	L38	34.82'	S84°02'55"W	L56	100.50'	S80°37'10"E
L3	35.48'	S81°43'03"W	L21	33.48'	N58°08'52"W	L39	38.54'	S60°10'49"E	L57	52.33'	N84°12'59"W
L4	37.18'	S42°11'32"W	L22	32.01'	N37°33'45"W	L40	110.08'	N29°49'11"E	L58	73.50'	N14°38'32"E
L5	27.34'	S24°52'26"W	L23	53.00'	N26°31'20"W	L41	83.75'	S60°10'49"E	L59	95.27'	S75°37'10"E
L6	26.68'	S16°46'44"W	L24	74.28'	S88°20'29"E	L42	105.69'	N29°49'11"E	L60	56.18'	S30°37'10"E
L7	41.48'	N24°14'28"W	L25	64.40'	N27°14'52"W	L43	63.75'	S60°10'49"E	L61	54.57'	S40°00'50"W
L8	60.65'	N32°20'49"W	L26	33.54'	S31°07'54"E	L44	20.48'	S72°33'26"E	L62	38.85'	S52°13'11"E
L9	30.87'	N54°53'55"W	L27	33.54'	S20°01'34"E	L45	7.07'	S72°33'26"E	L63	76.06'	S75°37'10"E
L10	39.35'	N03°27'33"W	L28	25.83'	N14°01'29"W	L46	52.01'	N02°44'19"E	L64	20.42'	N01°49'59"E
L11	105.98'	N23°07'24"W	L29	28.01'	S16°11'23"E	L47	61.59'	N65°01'39"E	L65	53.59'	N31°15'14"E
L12	62.19'	N04°21'17"E	L30	29.53'	S04°55'23"W	L48	49.46'	S87°15'41"E	L66	17.71'	N55°43'32"E
L13	47.22'	N20°23'50"W	L31	27.78'	S27°16'41"W	L49	80.65'	N02°44'19"E	L67	14.83'	N41°47'14"E
L14	26.11'	N34°06'56"W	L32	20.04'	S44°19'44"W	L50	103.98'	S87°15'41"E	L68	50.32'	N02°15'41"W
L15	4.52'	N46°35'48"E	L33	23.57'	S55°48'15"W	L51	30.92'	N68°53'38"W	L69	19.23'	S52°46'32"E
L16	51.37'	N44°16'43"W	L34	25.35'	S55°17'35"W	L52	66.22'	S09°22'50"W	L70	64.40'	S02°16'25"W
L17	41.11'	N79°41'30"W	L35	25.35'	S23°31'06"W	L53	95.48'	S80°37'10"E	L71	61.86'	N02°44'19"E
L18	53.93'	N86°34'28"W	L36	39.07'	S21°06'16"W	L54	49.92'	S35°37'10"E	L72	21.96'	S80°50'33"W
									L73	59.97'	N06°34'00"E
									L74	76.04'	N02°54'26"E

DEC 1, 1999

ROBERT M. FITZMAURICE
STATE OF WASHINGTON
32437
REGISTERED
PROFESSIONAL LAND SURVEYOR
EXPIRES JUNE 4, 2000

DOWL ENGINEERS
A Division of DOWL, Incorporated

DOWL FILE NO. S105-10E

VOLUME/PAGE 160 77

FILENAME: S115161\PAMD10-2.DWG CREATED: APR 03 1998 16:49:59 UPDATED: DEC 01 1999 14:29:41 PLOTTED: DEC 01 1999 14:30:25 (PWD) © DOWL 1998

VOLUME/PAGE

AMENDMENT NO. TEN TO

FOREST VILLAGE

A CONDOMINIUM

A PORTION OF THE NE 1/4 & SE 1/4 SEC. 16, T. 24 N., R. 6 E., W.M.
KING COUNTY, WASHINGTON

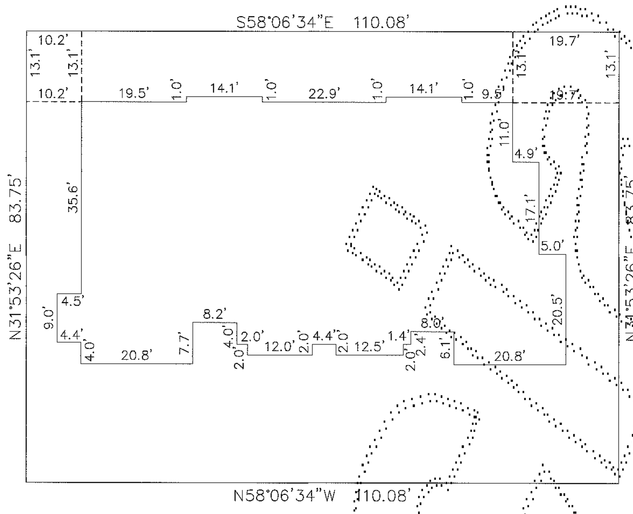

EXTERIOR PLAN
BUILDING 198 AS-BUILT

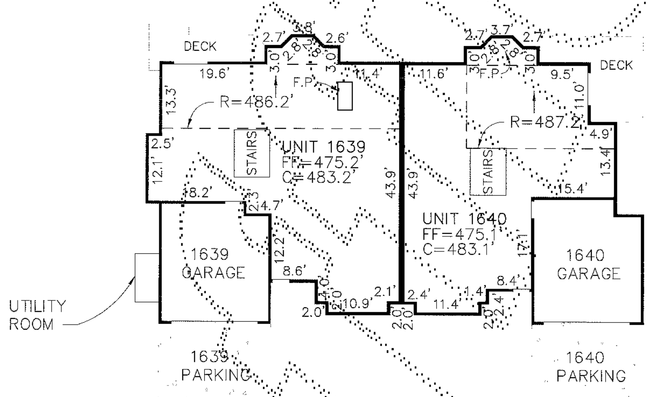

SECOND FLOOR INTERIOR PLAN
BUILDING 198 AS-BUILT

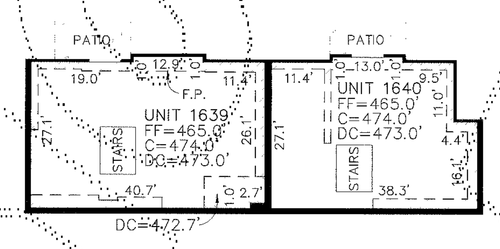

FIRST FLOOR INTERIOR PLAN
BUILDING 198 AS-BUILT

LEGEND

FF	= FINISH FLOOR ELEVATION
C	= CEILING ELEVATION
DC	= DROP CEILING ELEVATION
FP	= FIREPLACE
R	= CEILING RIDGE ELEVATION
	= DROP CEILING
	= EXTERIOR WALL (SEE DETAIL A)
	= SLOPED CEILING
	= CONCRETE SURFACE

NOTES

1. ALL INTERIOR DIMENSIONS & ELEVATIONS SHOWN ON THIS DRAWING ARE ± 0.1 FT.
2. THESE AS-BUILT PLANS DO NOT DEFINE OR EXCEPT "COMMON ELEMENTS" WHICH MAY OCCUR WITHIN THE HORIZONTAL AND VERTICAL BOUNDS OF ANY UNIT.

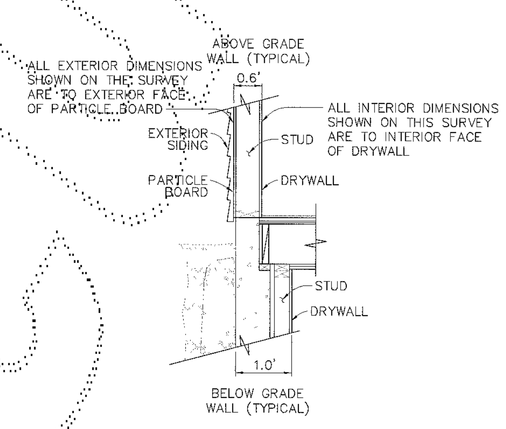

DETAIL A

TYPICAL DUPLEX EXTERIOR WALL SECTION–N.T.S.

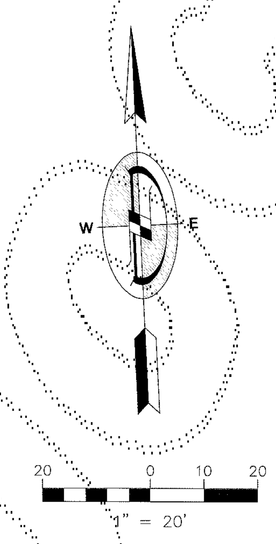

ROBERT M. FITZMAURICE
STATE OF WASHINGTON
32437
REGISTERED PROFESSIONAL LAND SURVEYOR
EXPIRES JUNE 4, 2000
DEC 01, 1999

DOWL ENGINEERS
A Division of DOWL, Incorporated

DOWL FILE NO. S105-10F

PAGE 6 OF 8

VOLUME/PAGE 160 78

FILENAME: S115\16\VAMD10-1.DWG CREATED: APR 03 1998 16:47:45 UPDATED: DEC 01 1999 14:45:03 PLOTTED: DEC 01 1999 14:45:27 (PWH) © DOWL 1998

VOLUME/PAGE

AMENDMENT NO. TEN TO

FOREST VILLAGE

A CONDOMINIUM

A PORTION OF THE NE 1/4 & SE 1/4 SEC. 16, T. 24 N., R. 6 E., W.M.
KING COUNTY, WASHINGTON

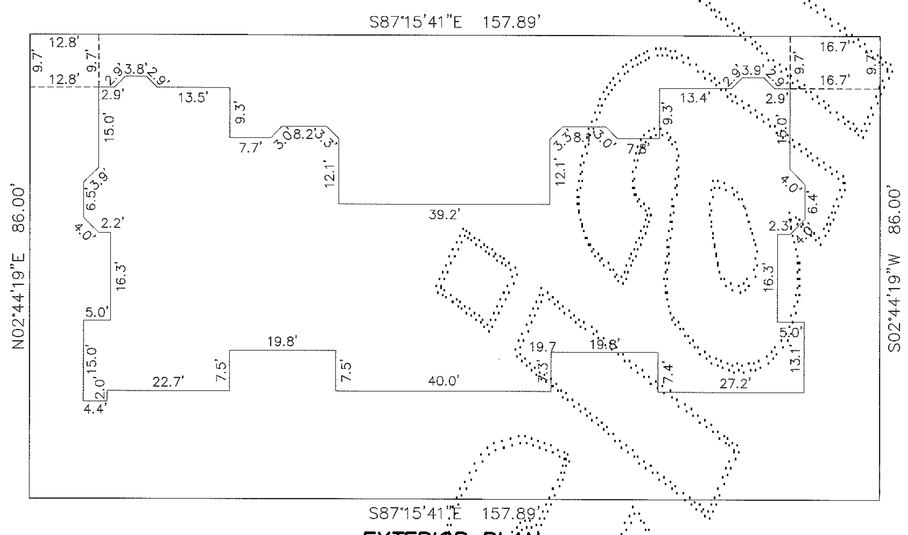

EXTERIOR PLAN
BUILDING 203 AS-BUILT

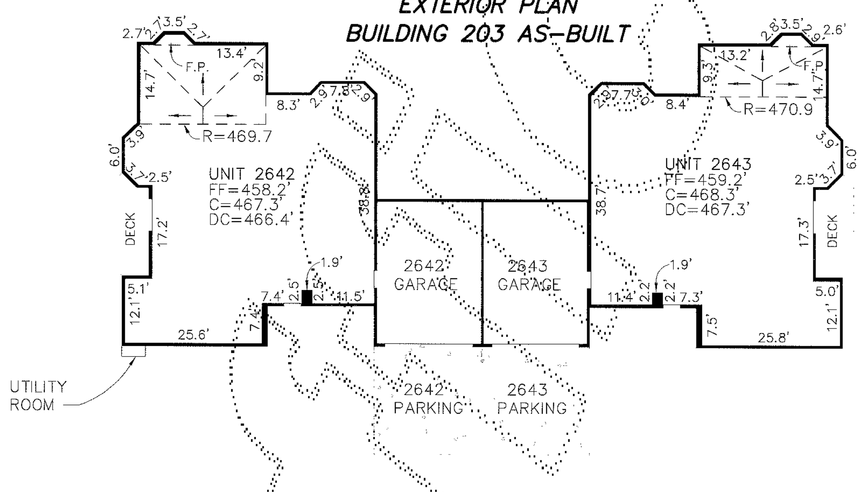

SECOND FLOOR INTERIOR PLAN
BUILDING 203 AS-BUILT

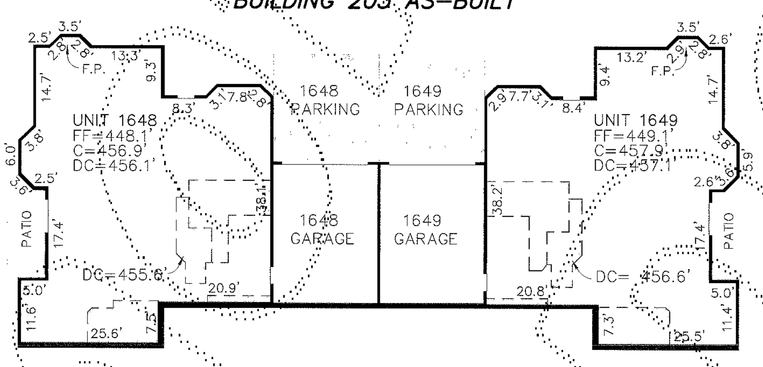

FIRST FLOOR INTERIOR PLAN
BUILDING 203 AS-BUILT

LEGEND

FF	= FINISH FLOOR ELEVATION
C	= CEILING ELEVATION
DC	= DROP CEILING ELEVATION
FP	= FIREPLACE
R	= CEILING RIDGE ELEVATION
[ ]	= DROP CEILING
———	= EXTERIOR WALL (SEE DETAIL A)
→	= SLOPED CEILING
	= CONCRETE SURFACE

NOTES

1. ALL INTERIOR DIMENSIONS & ELEVATIONS SHOWN ON THIS DRAWING ARE ± 0.1 FT.
2. THESE AS-BUILT PLANS DO NOT DEFINE OR EXCEPT "COMMON ELEMENTS" WHICH MAY OCCUR WITHIN THE HORIZONTAL AND VERTICAL BOUNDS OF ANY UNIT.

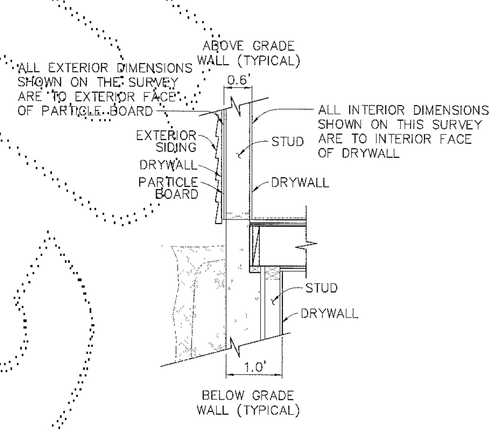

DETAIL A

TYPICAL FOURPLEX EXTERIOR WALL SECTION—N.T.S.

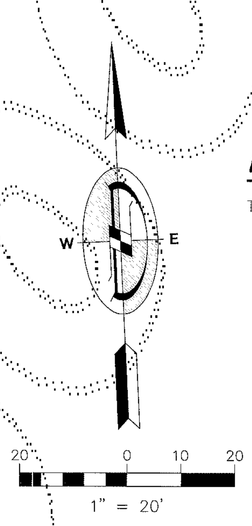

ROBERT M. FITZMAURICE
STATE OF WASHINGTON
32437
REGISTERED
PROFESSIONAL LAND SURVEYOR
EXPIRES JUNE 4, 2000
DEC 1, 1999

DOWL ENGINEERS
A Division of DOWL, Incorporated

DOWL FILE NO. S105-10G

VOLUME/PAGE 160 79

FILENAME: S11516FVAMD10-1.DWG CREATED: APR 03 1998 16:47:45 UPDATED: DEC 01 1999 14:45:03 PLOTTED: DEC 01 1999 14:45:17 (PWH) © DOWL 1998

VOLUME/PAGE

AMENDMENT NO. TEN TO

FOREST VILLAGE

A CONDOMINIUM

A PORTION OF THE NE 1/4 & SE 1/4 SEC. 16, T. 24 N., R. 6 E., W.M.
KING COUNTY, WASHINGTON

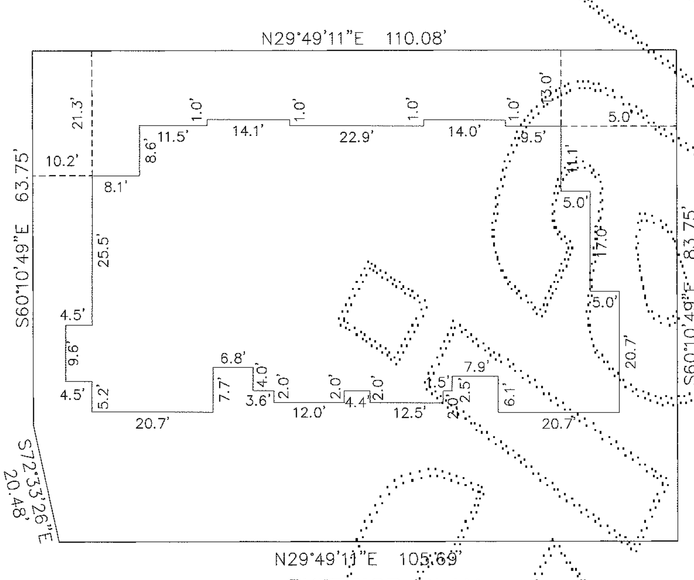

EXTERIOR PLAN
BUILDING 204 AS-BUILT

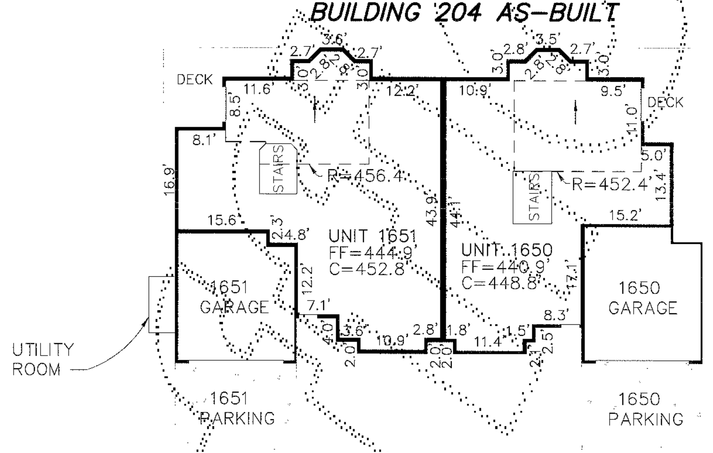

SECOND FLOOR INTERIOR PLAN
BUILDING 204 AS-BUILT

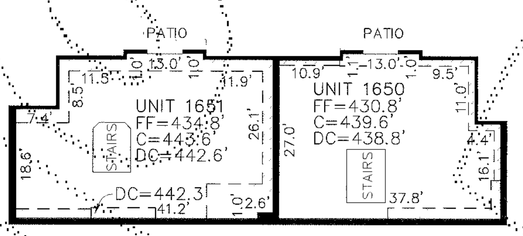

FIRST FLOOR INTERIOR PLAN
BUILDING 204 AS-BUILT

LEGEND

FF	= FINISH FLOOR ELEVATION
C	= CEILING ELEVATION
DC	= DROP CEILING ELEVATION
FP	= FIREPLACE
R	= CEILING RIDGE ELEVATION
	= DROP CEILING
	= EXTERIOR WALL (SEE DETAIL A)
	= SLOPED CEILING
	= CONCRETE SURFACE

NOTES

1. ALL INTERIOR DIMENSIONS & ELEVATIONS SHOWN ON THIS DRAWING ARE ± 0.1 FT.
2. THESE AS-BUILT PLANS DO NOT DEFINE OR EXCEPT "COMMON ELEMENTS" WHICH MAY OCCUR WITHIN THE HORIZONTAL AND VERTICAL BOUNDS OF ANY UNIT.

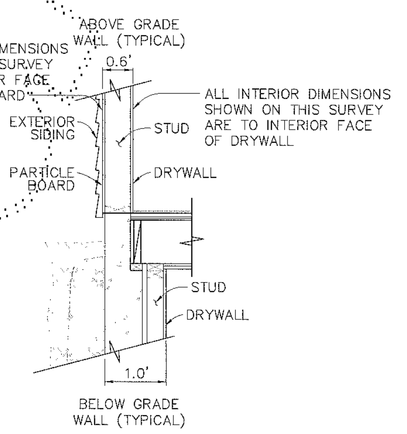

DETAIL A

TYPICAL DUPLEX EXTERIOR WALL SECTION-N.T.S.

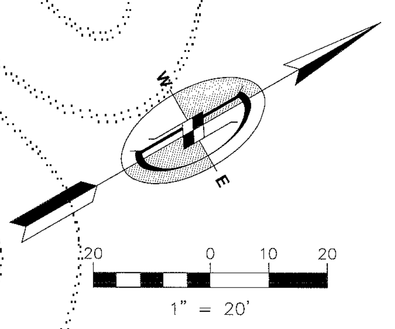

DEC 01, 1999

ROBERT M. FITZMAURICE
STATE OF WASHINGTON
3243
REGISTERED
PROFESSIONAL LAND SURVEYOR
EXPIRES JUNE 4, 2000

DOWL ENGINEERS
A Division of DOWL, Incorporated

DOWL FILE NO. S105-10H

VOLUME/PAGE 160 80

FILENAME: S1516\FVAMD10-1.DWG CREATED: APR 03 1998 16:47:45 UPDATED: DEC 01 1999 14:45:03 PLOTTED: DEC 01 1999 14:45:27 (PWH) © DOWL 1998